Diodes
Data Book
1996

TEMIC
Semiconductors

General Information

Diodes

Z- and Suppressor Diodes

Addresses

Contents

Selector Guide – Alphanumeric Index

Conventions Used in Presenting Technical Data

Nomenclature for Semiconductor Devices According to Pro Electron

The part number of a semiconductor device consists of two letters followed by a serial number.

For example: B A W 24

Material — Function — Serial number

The **first letter** indicates the material used for the active part of the device.

A GERMANIUM
(Materials with a bandgap 0.6–1.0 eV) [1)]

B SILICON
(Materials with a bandgap 1.0–1.3 eV) [1)]

C GALLIUM-ARSENIDE
(Materials with a bandgap > 1.3 eV) [1)]

R COMPOUND MATERIALS
(For example Cadmium-Sulphide)

The **second letter** indicates the circuit function.

A DIODE: detection, switching or mixer

B DIODE: variable capacitance

C TRANSISTOR: low power, audio frequency

D TRANSISTOR: power, audio frequency

E DIODE: tunnel

F TRANSISTOR: low power, high frequency

G DIODE: oscillator and miscellaneous

H DIODE: magnetic sensitive

K HALL EFFECT DEVICE:
in an open magnetic circuit

L TRANSISTOR: power, high frequency

M HALL EFFECT DEVICE:
in a closed magnetic circuit

N PHOTO COUPLER

P DIODE: radiation sensitive

Q DIODE: radiation generating

R THYRISTOR: low power

S TRANSISTOR: low power, switching

T THYRISTOR: power

U TRANSISTOR: power, switching

X DIODE: multiplier, e.g., varactor, step recovery

Y DIODE: rectifying, booster

Z DIODE: voltage reference or voltage regulator, transient suppressor diode

The **serial number** consists of:

- A four digit number from 100 to 9999 for devices primarily intended for consumer equipment.
- One letter (Z, Y, X, etc.) and a three-digit number from 10 to 999 for devices primarily intended for professional equipment.

A version letter can be used to indicate a deviation of a single characteristic, either electrical or mechanical. This letter does not have a fixed meaning. The only exception is the use of the letter R, indicating reversed voltage (e.g., collector to case).

[1)] The materials mentioned are examples

Polarity Conventions

The voltage direction is given

- by an arrow which points out from the measuring point to the reference point

or

- by a two letter subscript, where the first letter is the measuring point and the second letter is the reference point.

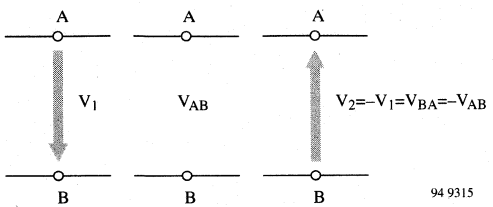

Figure 1.

The numerical value of the voltage is positive if the potential at the arrow tail is higher than at the arrow head; i.e., the potential difference from the measuring point (A) to the reference point (B) is positive.

The numerical value of the voltage is negative if the potential at the arrow head is higher than the tail; i.e., the potential difference from the measuring point to the reference point is negative.

In the case of alternating voltages, once the voltage direction is selected, it is maintained throughout. The alternating character of the quantity is given with the time dependent change in sign of its numerical values.

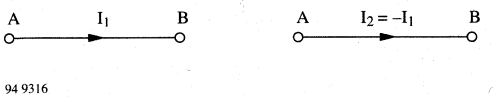

Figure 2.

The numerical value of the current is positive if the charge of the carriers moving in the direction of the arrow is positive (conventional current direction), or if the charge of the carriers moving against this direction is negative. The numerical value of the current is negative, if the charge of the carriers moving in the direction of the arrow is negative, or if the charge of the carriers moving against this direction is positive.

The general rules stated above are also valid for alternating quantities. Once the direction is selected, it is maintained throughout. The alternating character of the quantity is given with the time-dependent change in sign of its numerical values.

Polarity conventions for diodes

Here, the direction of arrows is selected in such a way that the numerical values of currents and voltages are positive both for forward (F or f) and reverse (R or r) directions.

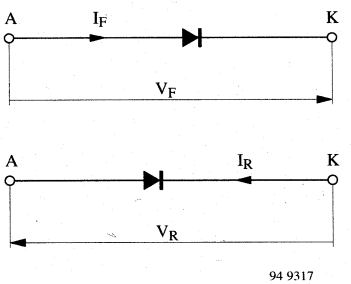

Figure 3.

Arrangement of Symbols

Letter symbols for current, voltage and power (according to DIN 41 785, sheet 1)

To represent current, voltage and power, a system of basic letter symbols are used. Capital letters are used for the representation of peak, mean, dc or root-mean-square values. Lower case letters are used for the representation of instantaneous values which vary with time.

Capital letters are used as subscripts to represent continuous or total values, while lower case letters are used to represent varying values.

The following table summarizes the rules given above.

Basic letter	
Upper-case	Upper-case
Instantaneous values which vary with time	Maximum (peak) average (mean) continuous (dc) or root-mean-square (RMS) values

Subscript(s)	
Upper-case	Upper-case
Varying component alone, i.e., instantaneous, root-mean-square, maximum or average values	Continuous (without signal) or total (instantaneous, average or maximum) values

Letter symbols for impedance, admittances, two-port parameters etc.

For impedance, admittance, two-port parameters, etc., capital letters are used for the representation of external circuits of which the device is only a part. Lower case letters are used for the representation of electrical parameters inherent in the device.

The rules are not valid for inductance and capacitance. Both these quantities are denoted with capital letters.

Capital letters are used as subscripts for the designation of static (dc) values, while lower case letters are used for the designation of small-signal values.

If more than one subscript is used (h_{FE}, h_{fe}), the letter symbols are either all capital or all lower case.

If the subscript has numeric (single, double, etc.) as well as letter symbol(s) (such as h_{21E} or $h_{21e'}$), the differentiation between static and small-signal value is made only by a subscript letter symbol.

Other quantities (values) which deviate from the above rules are given in the list of letter symbols.

The following table summarizes the rules given above.

Basic letter	
Upper-case	Upper-case
Electrical parameters inherent in the semiconductor devices except inductances and capacitances	Electrical parameters of external circuits and of circuits in which the semiconductor device forms only a part; all inductances and capacitances

Subscript(s)	
Upper-case	Upper-case
Small-signal values	Static (dc) values

Examples:

R_G Generator resistance
G_P Power gain
h_{FE} DC forward current transfer ratio in common emitter configuration
r_P Parallel resistance, damping resistance

Example for the use of symbols

according to 41785 and IEC 148

a) Transistor

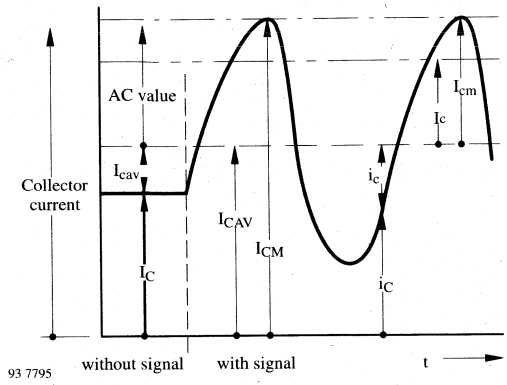

Figure 4.

I_C	dc value, no signal
I_{CAV}	Average total value
I_{CM};I_C	Maximum total value
I_{CEFF}	RMS total value
I_C;I_{CEFF}	RMS varying component
I_{CM};I_C	Maximum varying component value
i_C	Instantaneous total value
i_C	Instantaneous varying component value

The following relationships are valid:

$I_{CM} = I_{CAV} + I_{cm}$

$i_C = I_{CAV} + i_c$

b) Diode

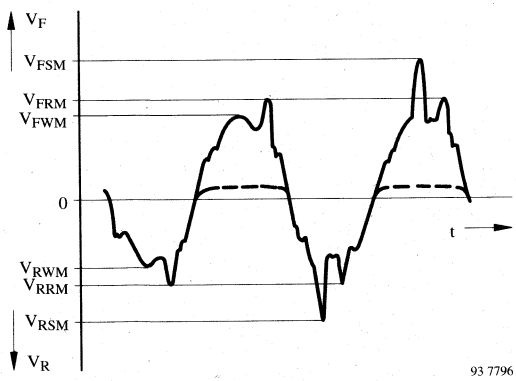

Figure 5.

V_F	Forward voltage
V_R	Reverse voltage
V_{FSM}	Surge forward voltage (non-repetitive)
V_{RSM}	Surge reverse voltage (non-repetitive)
V_{FRM}	Repetitive peak forward voltage
V_{RRM}	Repetitive peak reverse voltage
V_{FWM}	Crest working forward voltage
V_{RWM}	Crest working reverse voltage

List of Symbols

A
Anode

a
Distance (in mm)

b_{pn}
Normalized power factor

C
Capacitance, general

C_{case}
Case capacitance

C_D
Diode capacitance

C_i
Junction capacitance

C_L
Load capacitance

C_P
Parallel capacitance

F
Noise figure

f
Frequency

f_g
Cut-off-frequency

g
Conductance

I_F
Forward current

i_F
Forward current, instantaneous total value

I_{FAV}
Average forward current, rectified current

I_{FRM}
Repetitive peak forward current

I_{FSM}
Surge forward current, non-repetitive

I_{FWM}
Crest working forward current

I_R
Reverse current

i_R
Reverse current, instantaneous total value

I_{RAV}
Average reverse current

I_{RRM}
Repetitive peak reverse current

I_{RSM}
Non-repetitive peak reverse current

I_{RWM}
Crest working reverse current

I_S
Supply current

I_Z
Z-operating current

I_{ZM}
Z-maximum current

l
Length (in mm), (case-holder/soldering point)

LOCEP (local epitaxy)
A registrated trade mark of TEMIC for a process of epitaxial deposition on silicon. Applications occur in planer Z-diodes. It has an advantage compared to the normal process, with improved reverse current.

P
Power

P_{tot}
Total power dissipation

P_V
Power dissipation, general

P_{vp}
Pulse-power dissipation

Q
Quality

Q_{rr}
Reverse recovery charge

R_F
Forward resistance

r_f
Differential forward resistance

R_L
Load resistor

r_P
Parallel resistance, damping resistance

R_R
Reverse resistance

r_r
Differential reverse resistance

r_s
Series resistance

R_{thJA}
Thermal resistance between junction and ambient

R_{thJC}
Thermal reistance between junction and case

r_z
Differential Z-resistance in breakdown region (range)

$$r_z = r_{zj} + r_{zth}$$

r_{zj}
Z-resistance at constant junction temperature, inherent Z-resistance

r_{zth}
Thermal part of the Z-resistance

T
Temperature, measured in centigrade

T
Absolute temperature, Kelvin temperature

T
Period duration

T_{amb}
Ambient temperature (range)

t_{av}
Integration time

T_{case}
Case temperature

t_{fr}
Forward recovery time

T_j
Junction temperature

TK
Temperature coefficient

T_L
Connecting lead temperature in the holder (soldering point) at the distance/(mm) from case

t_P
Pulse duration (time)

$\frac{t_p}{T}$
Duty cycle

t_r
Rise time

t_{rr}
Reverse recovery time

t_s
Storage time

T_{sd}
Soldering temperature

T_{stg}
Storage temperature (range)

$V_{(BR)}$
Breakdown voltage

V_F
Forward voltage

V_F
Forward voltage, instantaneous total value

V_{FAV}
Average forward voltage

V_o
Rectified voltage

V_{FSM}
Surge forward voltage, non-repetitive

V_{FRM}
Repetitive peak forward voltage

V_{FWM}
Crest working forward voltage

V_{HF}
RF voltage, RMS value

V_{HF}
RF voltage, peak value

V_R
Reverse voltage

V_R
Reverse voltage, instantaneous total value

V_{RSM}
Surge reverse voltage, non-repetitive

V_{RRM}
Repetitive peak reverse voltage

V_{RWM}
Crest working reverse voltage

V_S
Supply voltage

V_T
Temperature voltage

V_Z
Z-operating voltage

Z_{thp}
Thermal resistance – pulse operation

φ
Angle of current flow

η_r
Rectification efficiency

T_o
Time constant

ΔC_D
Capacitance deviation

Assembly Instructions

General

Semiconductor devices can be mounted in any position. The terminal length may be bent at a distance greater than 1.5 mm from the case provided no mechanical force has an effect on the case.

If the device is to be mounted near heat generating components, consideration must be given to the resultant increase in ambient temperature.

Soldering Instructions

Leaded Devices

Protection against overheating is essential when a device is being soldered. It is recommended, therefore, that connection terminals are left as long as possible, are soldered at the tip only, and that any heat generated is quickly conducted away. The time during which the specified maximum permissible device junction temperature is exceeded during the soldering operation should be as short as possible, (i.e., for silicon, 260°C for 5 seconds.

Avoid any force on the body or leads during or just after soldering.

Do not correct the position of an already soldered device by pushing, pulling or twisting the body. Prevent fast cooling after soldering.

The maximum soldering temperatures are shown in table 1.

Surface Mounted Devices

Surface mounted devices (SMD) are components which are mounted directly on the surface of a printed circuit board without having to drill holes. In addition, these components can be completely submerged in a solder bath (overhead soldering). The SMD technology offers the following main advantages:

- Higher packing density (miniaturization)
- Reduction of the component mounting costs by fully automatic mounting

a) Gluing

In the case of flow or drag soldering, the components must be glued to the printed circuit board. The adhesive used for this purpose must be electrically neutral and must not react chemically with the materials of the printed circuit board or the components. The adhesive must not negatively affect subsequent soldering. After mounting, the adhesive must be hardened. The ultraviolet and/or thermal radiation commonly used for hardening is uncritical for our components. In the case of other soldering methods, gluing can be omitted if the flux or the solder paste provides sufficient adhesion of the components to the printed circuit board.

b) Soldering

The pins of TEMIC components are already tinned.

Dip soldering, flow soldering, reflow soldering, and vapor phase soldering are permissible.

The maximum temperature of 260°C over a period of 5 s must not be exceeded during soldering. Preheating (e.g., to 80°C) results in a higher chip temperature during soldering and should, therefore, not be done.

No aggressive fluxes may be used.

Table 1. Maximum soldering temperatures

	Iron Soldering			Dip or Flow Soldering			
	Iron Temperature	Soldering Distance from the Case	Maximum Allowable Soldering Time	Soldering Temperature	Soldering Distance from the Case		Maximum Allowable Soldering Time
					Vertical	Horizontal	
Glass case	≦260°C ≦260°C 260 to 400°C	1.5 to 5 mm > 5 mm > 5 mm	5 s 10 s 5 s	≦260°C	> 1.5 mm	> 5 mm	5 s
Plastic case	≦260°C ≦260°C	2 to 5 mm > 5 mm	3 s 5 s	≦260°C	> 1.5 mm	> 5 mm	3 s

A soldering iron should be used only in exceptional cases (repairs, etc.). A temperature regulated miniature soldering iron must be used, and care should be taken to avoid touching the component with the tip of the soldering iron.

For optoelectronic semiconductor components, the maximum soldering temperature is 240°C for 5 s.

c) Cooling

Cooling of the components with a fan after soldering is permissible.

d) Cleaning

If cleaning is necessary after soldering, it is recommended to wash with water which contains a detergent free of deposits.

Important layout notes

If components are to be arranged in rows, then separate soldering surfaces must be provided for each component. If this is not carried out, a block of solder forms between the components during soldering, and a rigid connection result. This can cause breakage or cracks in the component as the result of the slightest bending of the board, and thus lead to failures. If it is necessary to solder a wire (standard conductor, etc.) to the board, a separate soldering surface must be provided in order to avoid excessive heating of the components during soldering with a soldering iron.

Heat Removal

To keep the thermal equilibrium, the heat generated in the semiconductor junction(s) must be removed.

In the case of low-power devices, the natural heat-conductive path between the case and surrounding air is usually adequate for this purpose. However, in the case of medium-power devices, heat radiation may have to be improved by the use of star- or flag-shaped heat dissipators, which increase the heat radiating surface.

Finally, in the case of high-power devices, special heat sinks must be provided, the cooling effect of which can be increased further by the use of special coolants or air blowers.

The heat generated in the junction is conveyed to the case or header by conduction rather than convection. A measure of the effectiveness of heat conduction is the inner thermal resistance or thermal resistance junction case, R_{thJC}, the value of which is governed by the construction of the device.

Any heat transfer from the case to the surrounding air involves radiation convection and conduction. The effectiveness of transfer is expressed in terms of an R_{thCA}-value, i.e., the external or case-ambient thermal resistance. The total thermal resistance between junction and ambient is consequently

$$R_{thJA} = R_{thJC} + R_{thCA}.$$

The total maximum power, $P_{tot\ max}$, of a semiconductor device can be expressed as follows

$$P_{tot\ max} = \frac{T_{jmax} - T_{amb}}{R_{thJA}} = \frac{T_{max} - T_{amb}}{R_{thJC} + R_{thCA}}$$

where

T_{jmax}
is the maximum junction temperature,

T_{amb}
is the highest ambient temperature likely to be reached under the most unfavorable conditions,

R_{thJA}
is the thermal resistance between junction and ambient. For diodes with axial leads, it is measured with a heat sink at a specified distance from the case,

R_{thJC}
is the thermal resistance between junction and case,

R_{thCA}
is the thermal resistance between case and ambient. Its value is cooling dependent. When using heat sink, it can be influenced through thermal contact between the case and heat sink, thermal distribution in the heat sink and heat transfer to the surroundings.

Therefore, the maximum permissible total power dissipation for a given semiconductor device can be influenced only by changing T_{amb} and R_{thCA}. The value of R_{thCA} can be obtained either from the data of heat sink suppliers or through direct measurements.

Heat due to energy losses is mainly conducted with power diodes without cooling pins through the connecting leads and hence the pc board.

Figure 6 shows the thermal resistance plotted as a function of edge length. The values are valid with a heat source in the middle of the plate, resting air and vertical position. With horizontal position, thermal resistance increases approximately by 15 to 20%.

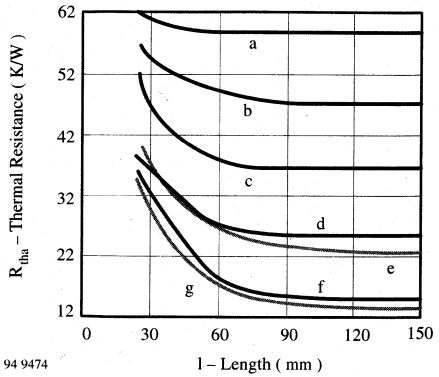

Figure 6.

Pertinax boards 1.5 mm thick

a: Pertinax non-metallized

b: Pertinax with 35 µm cooper metallization on one side; heat source fitted to non-metallized side

c: Pertinax with 70 µm cooper metallization on one side; heat source fitted to non-metallized side

d: Pertinax with 35 µm cooper metallization on one side; heat source fitted to metallized side

e: Pertinax with 35 µm cooper metallization on both sides

f: Pertinax with 70 µm cooper metallization on one side; heat source fitted to metallized side

g: Pertinax with 70 µm cooper metallization on both sides

R_{tha}: Thermal resistance of boards

l: Edge length

Quality Data

With an extensive system consisting of qualification, intermediate and final tests, TEMIC Semiconductors endeavours to supply the customers with components which fulfil the specifications of the OEM-industry.

If you are interested in detailed information regarding "Quality Assurance of Semiconductor Components", please ask for our booklet "Quality and Reliability".

Delivery Quality

To secure the delivery quality the following precautions are used:

- 2 × 100% final test
- Process control by SPC and FMEA
- Observation of the ppm level

Manufacturing has ISO 9001 approval

To designate the delivery quality, the following specifications are given:

- Maximum and minimum values of the characteristics
- AQL values (Acceptable Quality Level)

Shipment lots whose defect percentage is equal to or less than the percentage given in AQL value shall be accepted with greater probability (L ≧ 90%) due to sampling tests (see 'Sampling Inspection Plans').

Classification of Defects

The possible defects with which a semiconductor device could be subjected are classified according to the probable influence of existing circuits:

- Total (critical) defect
  When this defect occurs the functional use of the device is impossible.
  For example: open contacts, short circuit, non-functioning, unstable characteristics, wrong polarity marking, gross mechanical failure, non-solderability, wrong parts in a belt, mixtures with wrong parts.
- Major defect
  This is a defect which is usually responsible for the failure of a device to function in its intended purpose.
  For example: parameter limits exceeded, incomplete type data, dimensional tolerance exceeded.
- Minor defect
  This is a defect which is responsible for the function of a device with no or only a slight reduction in effectiveness.
  For example: markings difficult to read, uncritical parameters, slightly bent connector pins.

AQL Values

According to the classification of defects mentioned above, the following AQL values, unless otherwise specified, are valid for data sheets of semiconductor devices. Under this classification, the inspection is carried out after the single sampling plan for attribute testing (see section 'Sampling Inspection Plans') which corresponds largely to ABC-STD 105 D, inspection level II.

Classification of Defects	AQL	n-c
Total defects	0.065	200-0
Major electrical defects	0.065	200-0
Major mechanical defects	0.25	200-1
Minor defects	0.4	200-2

A cumulative AQL equal to 0.4 is valid for all defects mentioned above.

Sampling Inspection Plans

List of symbols:

AQL Acceptable Quality Level

N Lot size

n Sample size

c Acceptance number

D_{max} Average outgoing quality level

Single sampling plan for attribute testing (according to DIN)

Normal Inspection	AQL											Reduced Inspection
	0.06	0.10	0.15	0.25	0.40	0.65	1.0	1.5	2.5	4.0	6.5	
N	n–c (D_{max} in %)											N
2–15	200–0 (0.18)	125–0 (0.29)	80–0 (0.45)	50–0 (0.71)	32–0 (1.1)	20–0 (1.7)	13–0 (2.6)	8–0 (3.9)	5–0 (6.7)	3–0 (9.6)	2–0 (15.6)	2–15
16–50										13–1 (4.8)	8–1 (9.2)	16–150
51–150								32–1 (2.3)	20–1 (3.6)	20–2 (6.0)	20–3 (8.4)	151–280
151–280							50–1 (1.5)		32–2 (3.8)	32–3 (5.4)	32–5 (8.8)	281–500
281–500						80–1 (1.0)		50–2 (2.4)	50–3 (3.5)	50–5 (5.7)	50–7 (8.1)	501–1200
501–1200					125–1 (0.64)		80–2 (1.6)	80–3 (2.2)	80–5 (3.7)	80–7 (5.2)	80–10 (7.7)	1201–3200
1201–3200				200–1 (0.41)		125–2 (1.1)	125–3 (1.5)	125–5 (2.4)	125–7 (3.5)	125–10 (5.0)	125–14 (7.2)	3201–10000
2101–10000			315–1 (0.27)		200–2 (0.68)	200–3 (0.68)	200–5 (1.6)	200–7 (2.2)	200–10 (3.2)	200–14 (4.6)	200–21 (7.3)	10001–35000
10001–35000		500–1 (0.17)		315–2 (0.44)	315–3 (0.61)	315–5 (0.99)	315–7 (1.4)	315–10 (2.1)	315–14 (3.0)	315–21 (4.7)		

Single sampling plan for destructive or very costly test procedures (AEG 1416, Z-plans)

Normal Inspection	AQL											Reduced Inspection
	0.06	0.10	0.15	0.25	0.40	0.65	1.0	1.5	2.5	4.0	6.5	
N	n–c (D_{max} in %)											N
2–25	200–0 (0.18)	125–0 (0.29)	80–0 (0.46)	50–0 (0.74)	32–0 (1.2)	20–0 (1.8)	13–0 (2.8)	8–0 (4.5)	5–0 (7.2)	3–0 (11.6)	2–0 (16.6)	2–50
26–90											8–1 (10.8)	51–150
91–150										13–1 (6.3)		151–500
151–500									20–1 (4.1)			501–3200
501–1200								32–1 (2.6)		20–2 (6.8)	20–3 (9.5)	3201–35000
1201–10000							50–1 (1.7)		32–2 (4.3)	32–3 (6.1)	32–5 (9.9)	
10001–35000						80–1 (1.1)		50–2 (2.7)	50–3 (3.9)	50–5 (6.3)	50–7 (9.0)	

Physical Explanation

General Terminology

Semiconductor diodes are used as rectifiers, switchers, varactors and voltage stabilizers (see chapter 'Voltage Regulator and Z-diodes').

Semiconductor diodes are two-terminal solid-state devices having asymmetrical voltage-current characteristics. Unless otherwise stated, this means a device has single pn-junction corresponding to the characteristics shown in figure 7.

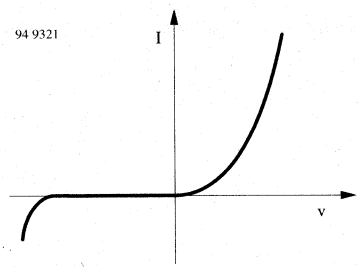

Figure 7.

An application of the voltage current curve is given by

$$I = I_S \left(\exp \frac{V}{V_T} - 1 \right)$$

where

I_S = saturation current

$$V_T = \frac{k \times T}{q} = \text{temperature potential}$$

If the diode is forward-biased (anode positive with respect to cathode), its forward current ($I = I_F$) increases rapidly with increasing voltage. That is, its resistance becomes very low.

If the diode is reverse-biased (anode negative with respect to cathode), its reverse current ($-I = I_R$) is extremely low. This is only ralid until the breakdown voltage $V_{(BR)}$ has been reached. When the reverse voltage is slightly higher than the breakdown voltage, a sharp rise in reverse current results.

Bulk resistance
Resistance of the bulk material between junction and the diode terminals.

Parallel resistance, r_P
Diode resistance resulting from HF rectification which acts as a damping resistance to the pre-tuned demodulation circuit.

Differential resistance
See forward resistance, differential

Diode capacitance, C_D
Total capacitance between the diode terminals due to case, junction and parasitic capacitances.

Breakdown voltage, $V_{(BR)}$
Reverse voltage at which a small increase in voltage results in a sharp rise of reverse current. It is given in the technical data sheet for a specified current.

Forward voltage, V_F
The voltage across the diode terminals which results from the flow of current in the forward direction.

Forward current, I_F
The current flowing through the diode in the direction of lower resistance.

Forward resistance, r_F
The quotient of dc forward voltage across the diode and the corresponding dc forward current.

Forward resistance, differential r_f
The differential resistance measured between the terminals of a diode under specified conditions of measurement, i.e., for small-signal ac voltages or currents at a point of forward direction V-I characteristic.

Case capacitance, C_{case}
Capacitance of a case without a semiconductor crystal.

Integration time, t_{av}
With certain limitations, absolute maximum ratings given in technical data sheets may be exceeded for a short time. The mean value of current or voltage is decisive over a specified time interval termed integration time. These mean values over time interval, t_{av}, should not exceed the absolute maximum ratings.

Average rectified output current, I_{FAV}
The average value of the forward current when using the diode as a rectifier. The maximum allowable average rectified output current depends on the peak value of the applied reverse voltage during the time interval at which no current is flowing. In the absolute maximum ratings, one or both of the following are given:

- The maximum permissible average rectified output current for zero diode voltage (reverse)
- The maximum permissible average rectified output current for the maximum value of U_{RRM} during the time interval at which no current is flowing.

Note: I_{FAV} decreases with an increasing value of the reverse voltage during the interval of no current flow.

Rectification efficiency, η_r
The ratio of the dc load voltage to the peak input voltage of an RF rectifier.

Reverse recovery time, t_{rr}
The time required for the current to reach a specified reverse current, i_R, after instantaneous switching from a specified forward condition (e.g., I_F) to a specified reverse bias condition (e.g., I_R).

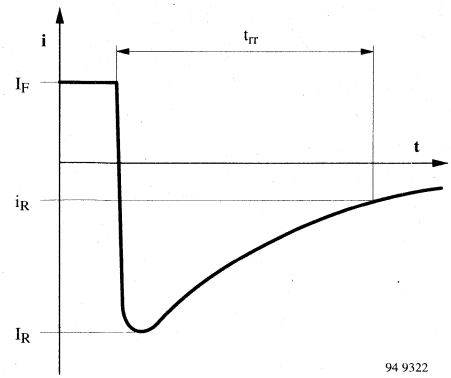

Figure 8.

Series resistance, r_s
The total value of resistance representing the bulk, contact and lead resistance of a diode given in the equivalent circuit diagram of variable capacitance diodes.

Junction capacitance, C_j
Capacitance due to a pn junction of a diode which decreases with increasing reverse voltage.

Reverse voltage, V_R
The voltage drop which results from the flow of reverse current (through the semiconductor diode).

Reverse current, I_R (leakage current)
The current which flows when reverse bias is applied to a semiconductor junction.

Reverse resistance, R_R
The quotient of the dc reverse voltage across a diode and the corresponding dc reverse current.

Reverse resistance, differential, r_r
The differential resistance measured between the terminals of a diode under specified condition of measurement i.e., for small-signal (ac) voltage or currents at a point of reverse-voltage direction V-I characteristic.

Peak forward current, I_{FRM}
The maximum forward current with sine-wave operation, f ≧ 25 Hz, or pulse operation, f ≧ 25 Hz, having a duty cycle $t_p/T \leqq 0.5$.

Peak reverse voltage, V_{RRM}
The maximum reverse voltage having an operating frequency f ≧ 25 Hz for sine-wave as well as pulse operation.

Peak surge forward current, I_{FSM}
The maximum permissible surge current in a forward direction having a specified waveform with a short specified time interval (i.e., 10 ms) unless otherwise specified. It is not an operating value. During frequent repetitions, there is a possibility of change in the device's characteristic.

Peak surge reverse voltage, V_{RSM}
The maximum permissible surge voltage applied in a reverse direction. It is not an operating value. During frequent repetitions, there is a possibility of change in the device's characteristic.

Power dissipation, P_V
An electrical power converted into heat. Unless otherwise specified, this value is given in the data sheets under absolute maximum ratings, with $T_{amb} = 25°C$ at a specified distance from the case (both ends).

Forward recovery time, t_{fr}
The time required for the voltage to reach a specified value after instantaneous switching from zero or a specified reverse voltage to a specified forward-biased condition.

This recovery time is especially noticeable when higher currents are to be switched within a short time. The reason is that the forward resistance during the turn-on time could be higher than the dc current (inductive behavior). This can result in the destruction of a diode because of high instantaneous power loss if constant current control is used.

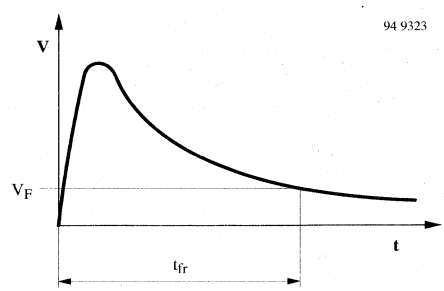

Figure 9.

Voltage Regulator Diodes and Z-diodes

A voltage regulator diode is a diode which develops an essentially constant voltage across its terminals throughout a specified current range.

Special reverse-biased diodes known as Z-diodes and certain forward-biased silicon diodes can be used as voltage regulator diodes.

Z-diodes are silicon diodes which result from a specified applied reverse voltage onward in a rapid increase of reverse current avalanche or Z-breakdown voltage. These diodes are operated permanently in this breakdown region.

Due to the sharp rise of the reverse, current the corresponding breakdown voltage is nearly constant.

Z-diodes are used for voltages above 2.4 V. If lower operating voltages are needed, the above mentioned forward-biased silicon diodes can be used.

Operating or working voltage, in the breakdown region, V_Z
Voltage across the terminals of a Z-diode for a specified value of reverse current in the breakdown region.

Operating or working current in the breakdown region, I_Z
Reverse current flowing in an allowable area of the breakdown region of a Z-diode.

Differential resistance in the breakdown region, r_z
Differential quotient between operating voltage and operating current for a specified working current.

$$r_Z = \frac{dV_Z}{dI_Z}$$

This value is the sum of inherent (r_Z) and thermal differential (r_{zj}) resistances.

$$r_Z = r_{zj} + r_{zth}$$

Inherent differential resistance, r_{zj}, in the breakdown region
This value is a part of the total differential resistance of a Z-diode in the breakdown region. It is responsible for short-time load change and constant junction temperature.

$$r_{zj} = \left(\frac{\delta V_Z}{\delta I_Z}\right) \quad T_j = \text{constant}$$

It is valid for the case where the frequency of load changes is so high that the junction temperature does not change.

Thermal differential resistance, r_{zth}, in the breakdown region
The thermal differential resistance is a result of the thermal characteristics of the diode. This should be considered together with inherent differential resistance, r_{zj}.

$$r_{zth} = \frac{dT_j}{dI_Z} \times \left(\frac{\delta V_Z}{\delta T_j}\right) \quad I_Z = \text{constant}$$

$$= U_Z^2 \times R_{thJA} \times TK_{VZ}$$

Measuring current, I_Z
The value given in technical data serves as a measuring condition for the operating voltage, V_Z, inherent differential resistance, r_{zj}, and the temperature coefficient of the operating voltage, TK_{VZ}.

Temperature coefficient, TK_{VZ}
This characteristic gives the temperature dependence of the operating voltage for a specified operating current such as

$$TK_{VZ} = \frac{1}{V_Z} \times \frac{dV_Z}{dt}$$

The unit for measure used is either %/°C or 10^{-4}/°C

Z-voltage, V_Z
See operating or working voltage

Z–current, I_Z
See operating or working current

Z-resistance, r_Z
See differential resistance

Varactor Diodes

Varactor diodes are used in different circuits, such as tuning, AFC, frequency multiplier, modulation, couple element in filters with controlled bandwidth, parametric amplification, switching in the VHF- and microwave regions, etc. In all these applications, the basic variation of junction capacitance with reverse voltage has been investigated.

A simplified equivalent circuit of an encapsulated varactor diode is shown in figure 10.

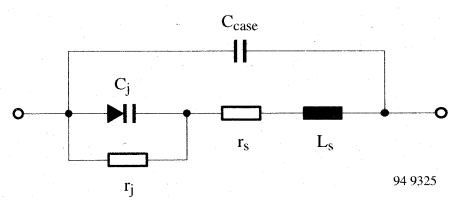

Figure 10.

C_{case} = Case capacitance
C_j = Junction capacitance
r_s = Series resistance
L_s = Series inductance
r_j = Junction resistance

In the case of silicon (varactor) diodes, the junction resistance, r_j, is very high at zero or negative (reverse) bias. At high resonant frequency, C_{case} can be neglected and the equivalent circuit is the one shown in figure 11.

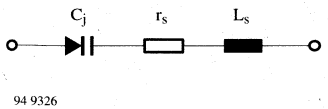

Figure 11.

Junction capacitance C_j can be calculated as follows:

$$C_j = \frac{C_{jo}}{\left(\frac{1+V_R}{V_D}\right)^n}$$

C_{jo} = Junction capacitance at zero bias ($V_R = 0$)
V_D = Diffusion voltage, 0.7 V for silicon
n = The exponent n has different values according to the technology used, such as:
n = 0.33-diffused diode with linear technology
n = 0.5-abrupt pn junction, planar epitaxial technology
n $\geqq$ 0.75-diode with retrograded junction

Retrograded junction diodes ($n \geqq 0.75$) are capable of very large capacitance deviation and are therefore suitable for tuning with large frequency range (i.e., BB205 for VHF). For these diodes, n is a function of reverse voltage, i.e., $n = f(V_R)$. The quality, Q, of the varactor is an important factor and can be calculated as follows:

$$Q = \frac{1}{2\pi \times f \times C_j \times r_s}$$

The series resistance, r_s, decreases with the increasing applied bias. It is also frequency dependent. The non-linearity of a capacitance characteristic results in a signal distortion or deformation due to the ratio of a signal amplitude to the applied bias.

In push-pull arrangements one can further minimize the distortion even with a larger range of signal. Because the signal modulates the diode in counter phase, the capacitance changes. The diode is now almost compensated.

The temperature coefficient of the junction capacitance is approximately 3×10^{-4}/°C with $V_R = 3$ V. It is a result of a change of –2 mV/°C in diffusion voltage, V_D. The temperature coefficient of the junction capacitance decreases with increasing reverse voltage.

The junction resistance, r_j, decreases 6% and the series resistance, r_s, decreases approximately 1% with an increase in the junction temperature of 1°C.

PIN Diodes

PIN stands for p-intrinsic-n. In this type of diode, a heavily doped p region and a heavily doped n region are separated by a layer of high resistivity material which is nearly intrinsic (I), as shown in figure 12.

Under reverse bias, the PIN diode has a very high impedance (at microwave frequencies), whereas at moderate forward current it has a very low impedance. This permits the use of the PIN diode as a low-loss switch with small self capacitance.

Because the RF resistance of the diode can be varied continuously from large to small values by changing the diode bias. the PIN diode can therefore be used more advantageously as an HF attenuator in a π or T-circuit. Typical examples are: VHF-band switch diode BA282, BA682 and attenuator diode BA479G and BA679.

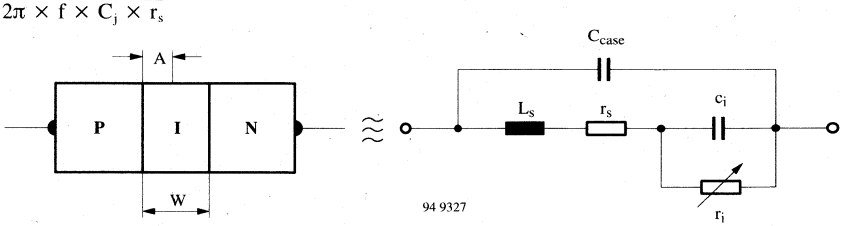

W = Width of the I-Zone
A = Space charge carrier area
L_s = Total series inductance
r_s = Total resistance of the p and n layers and any resistance associated with the contacts of these layers
r_i and c_i = Represent the resistance and capacitance of the portion of the I-layer exclusive of the swept-out region

Figure 12.

Data Sheet Construction

Data sheet information is generally presented in the following sequence:

- Device description
- Absolute maximum ratings
- Thermal data – thermal resistances
- Characteristics, switching characteristics
- Electrical characteristics
- Dimensions (mechanical data)

Additional information on device performance is provided where necessary.

Device Description

The following information is provided: part number, semiconductor materials used, sequence of zones, technology used, device type and, if necessary construction.

Also, information on the typical **Applications** and special **Features** is given

Absolute Maximum Ratings

The absolute maximum ratings indicate the maximum permissible operational and environmental conditions. Exceeding any one of these conditions could result in the destruction of the device. Unless otherwise specified, an ambient temperature of 25°C ± 3°C is assumed for all absolute maximum ratings. Most absolute ratings are static characteristics; if they are measured by a pulse method, the associated measurement conditions are stated.

Maximum ratings are absolute
(i.e., not interdependent).

Any equipment incorporating semiconductor devices must be designed so that even under the most unfavorable operating conditions the specified maximum ratings of the devices used are never exceeded. These ratings could be exceeded because of changes in:

- Supply voltage
- The properties of other components used in the equipment
- Control settings
- Load conditions
- Drive level
- Environmental conditions
- The properties of the devices themselves (aging)

Thermal Data – Thermal Resistances

Some thermal data (e.g., junction temperature, storage temperature range, total power dissipation), impose a limit on the application range of the device, are given under the heading "Absolute Maximum Ratings".

A special section is provided for thermal resistances.

Temperature coefficients, on the other hand, are listed together with the associated parameters under "Characteristics, Switching Characteistics".

Characteristics, Switching Characteristics

Under this heading, the most important operational electrical characteristics (minimum, typical and maximum values) are grouped together with associated test conditions supplemented with curves.

Dimensions (Mechanical Data)

Important dimensions and the sequence of connections supplemented by a circuit diagram are included in the mechanical data. Case outline drawings carry DIN, JEDEC or commercial designations. Information on weight completes is also included.

Note:

If the dimension information does not includes any tolerances, then lead length and mounting hole dimensions are minimum values. All other dimensions are maximum.

Additional Information

Not for new developments: This heading indicates that the device concerned should not be used in equipment under development. It is, however, available for present production.

Packing

Packing Specification for Axial Lead Components

Diodes and rectifiers with axial leads are normally delivered in taped form according to IEC 286-1 (see figure 13). The cathode side is designated by a colored tape. Taped devices are normally delivered in ammo-boxes (Ammopack). Delivery on reels is available on request. Diodes in DO35 packages are also available with 26 mm tapewidth and radial taped. For details please contact factory.

Quantities per box dimensions 264 (L) x 146(H) x 73(W)

Case Type	Quantity
DO35	10000
DO41	5000
SOD57	5000
SOD64	2500

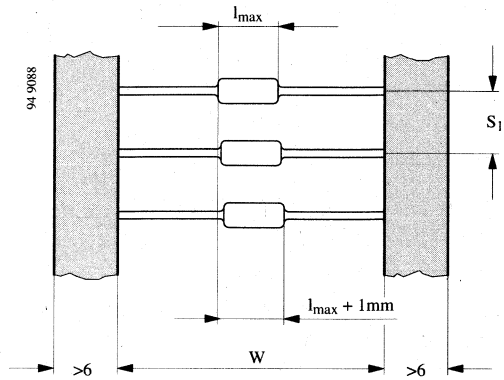

S_1 = 5 ± 0.5 for devices with diameter d < 4.5 mm
= 10 ± 0.5 mm for devices with diameter d > 4.5 mm

W = 53 ± 2 mm for normal taped form
= 26 + 1.5 for GPS version

Allowable deviation above 10 taped steps ± 2 mm

Figure 13. Standard taped diodes with axial leads

Packing Specification for Surface-Mounted Devices (SMDs)

SMDs are normally delivered taped on blister tape and reeled according to IEC 286–3. The mounting side of the component is oriented to the bottom side of the tape. For components with two terminations, the cathode side, is oriented to the sprocket hole. For components in SOT23 package, the side from which one single termination emerges is oriented to the sprocket hole. Components can be delivered either on 180 mm or on 330 mm reels. For quantities per reel, see below.

Case Type	Suffix	Quantity	Reel Size in mm (Diameter)	Tape Width in mm
SOD80 (MiniMelf)	GS08	2500	180	8
SOD80 (MiniMelf)	GS18	10000	330	8
QuadroMelf	GS08	2500	180	8
QuadroMelf	GS18	10000	330	8
SOT23	GS08	3000	180	8
SOT23	GS18	10000	330	8
DO214AC (SMA)	TR	1500	180	12
DO214AC (SMA)	TR3	6000	330	12
Micro Melf	TR	2500	180	8
Micro Melf	TR3	10000	330	8

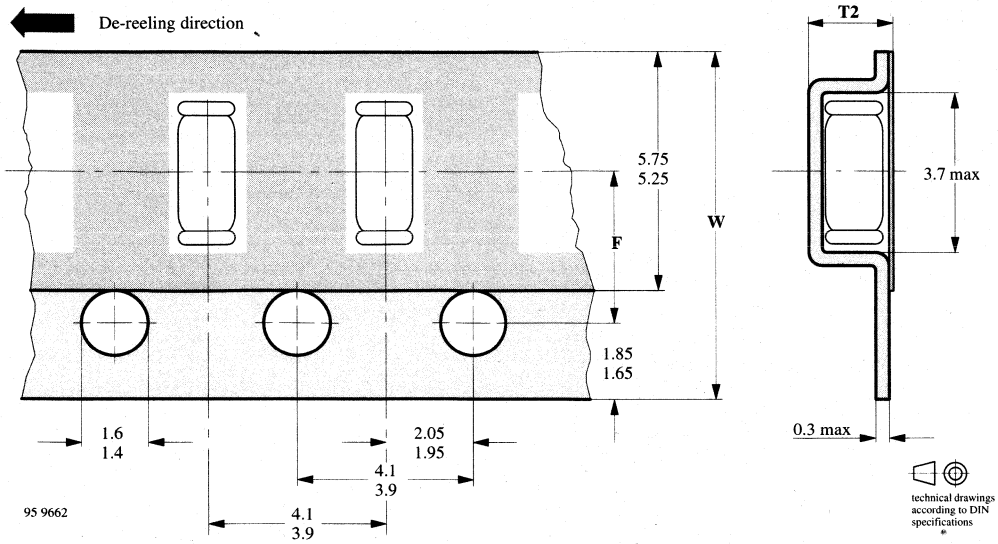

Figure 14.

Dimensions (mm)		
W	F	T2
8 ± 0.3	3.5 ± 0.05	2.5 mm max.
12 ± 0.3	5.5 ± 0.05	4.5 mm max.

Missing devices

A maximum of 0.5% of the total number of components per reel may be missing – exclusively at the beginning and at the end of the reel. A maximum of three consecutive com- ponents may be missing, provided this gap is followed by six consecutive components (see figure 15).

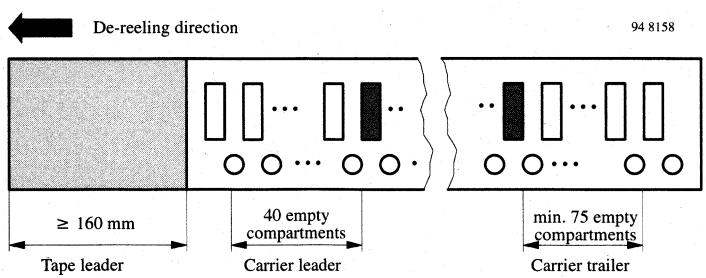

Figure 15.

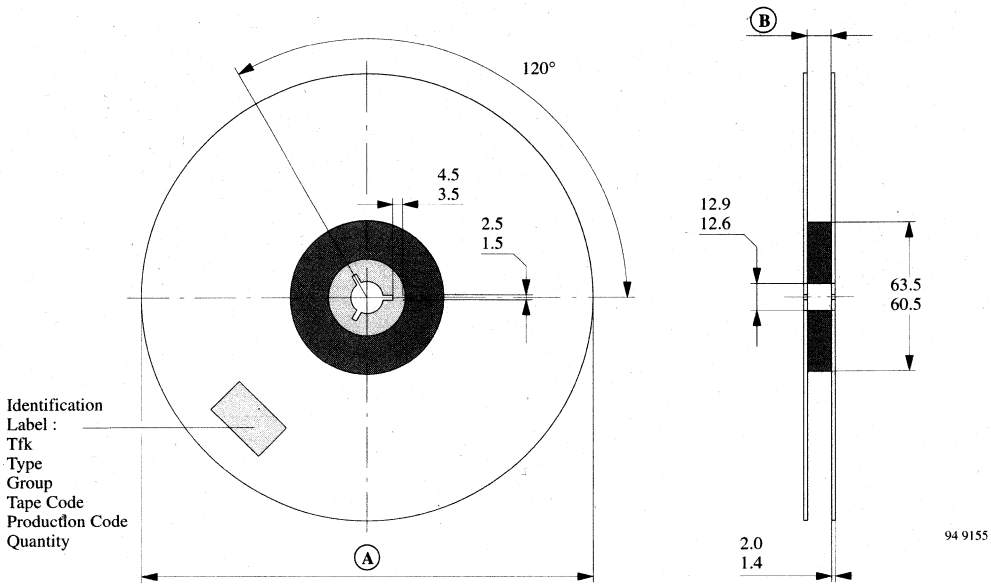

A: 180 –2 mm or 330 – 2 mm
B: 9 to 10 mm or 12.4 to 14.4 mm

Figure 16.

General Information

Diodes

Z- and Suppressor Diodes

Addresses

Silicon Planar Diodes

Features

- Low differential forward resistance
- Low diode capacitance
- High reverse impedance

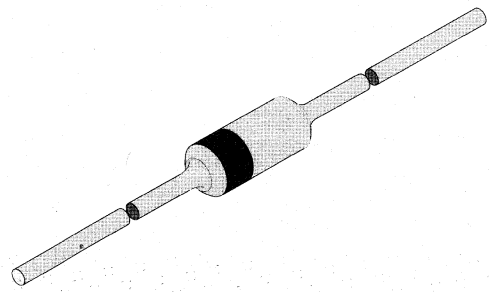

94 9367

Applications

Band switching in VHF–tuners

Absolute Maximum Ratings

$T_j = 25°C$

Parameter	Test Conditions	Type	Symbol	Value	Unit
Reverse voltage			V_R	35	V
Forward current			I_F	100	mA
Junction temperature			T_j	150	°C
Storage temperature range			T_{stg}	–55...+150	°C

Maximum Thermal Resistance

$T_j = 25°C$

Parameter	Test Conditions	Symbol	Value	Unit
Junction ambient	l=4mm, T_L=constant	R_{thJA}	350	K/W

Characteristics

$T_j = 25°C$

Parameter	Test Conditions	Type	Symbol	Min	Typ	Max	Unit
Forward voltage	I_F=100mA		V_F			1	V
Reverse current	V_R=20 V		I_R			50	nA
Diode capacitance	f=100MHz, V_R=1V		C_D			1.5	pF
	f=100MHz, V_R=3V	BA282	C_D			1.25	pF
		BA283	C_D			1.2	pF
Differential forward resistance	f=200MHz, I_F=3mA	BA282	r_f			0.7	Ω
		BA283	r_f			1.2	Ω
	f=200MHz, I_F=10mA	BA282	r_f			0.5	Ω
		BA283	r_f			0.9	Ω
Reverse impedance	f=100MHz, V_R=1V		z_r	100			kΩ

Typical Characteristics ($T_j = 25°C$ unless otherwise specified)

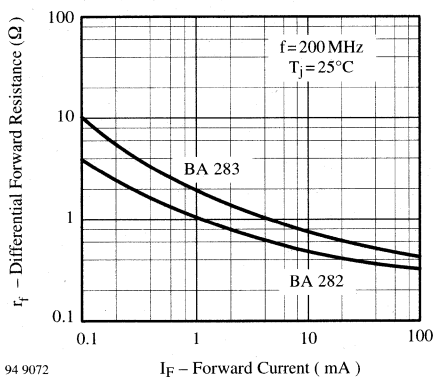

Figure 1. Differential Forward Resistance vs. Forward Current

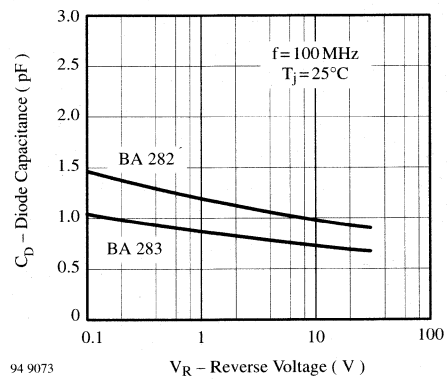

Figure 2. Diode Capacitance vs. Reverse Voltage

Dimensions in mm

technical drawings according to DIN specifications

94 9366

Standard Glass Case
54 A 2 DIN 41880
JEDEC DO 35
Weight max. 0.3 g

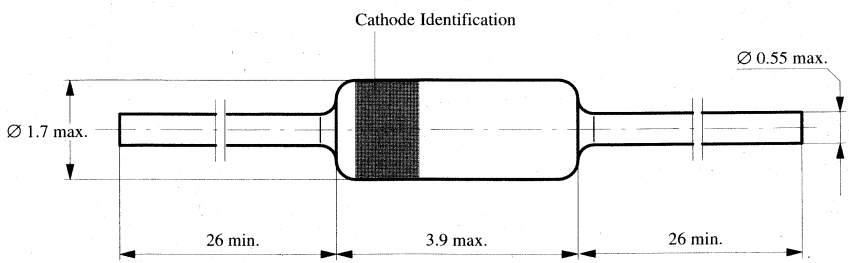

Silicon PIN Diodes

Features

- Wide frequency range 10 MHz to 1 GHz

Applications

Current controlled HF resistance in adjustable attenuators

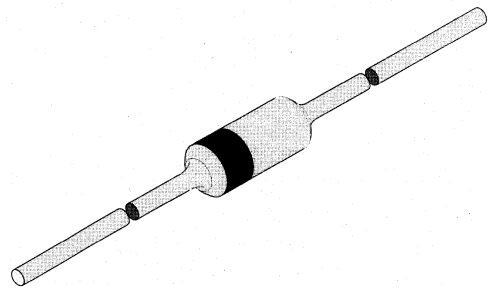

94 9367

Absolute Maximum Ratings

$T_j = 25°C$

Parameter	Test Conditions	Type	Symbol	Value	Unit
Reverse voltage			V_R	30	V
Forward current			I_F	50	mA
Junction temperature			T_j	125	°C
Storage temperature range			T_{stg}	–55...+125	°C

Maximum Thermal Resistance

$T_j = 25°C$

Parameter	Test Conditions	Symbol	Value	Unit
Junction ambient	l=4mm, T_L=constant	R_{thJA}	350	K/W

Characteristics

$T_j = 25°C$

Parameter	Test Conditions	Type	Symbol	Min	Typ	Max	Unit
Forward voltage	I_F=20mA		V_F			1	V
Reverse current	V_R=30 V		I_R			50	nA
Diode capacitance	f=100MHz, V_R=0		C_D			0.5	pF
Differential forward resistance	f=100MHz, I_F=1.5mA		r_f			50	Ω
Reverse impedance	f=100MHz, V_R=0	BA479G	z_r	5			kΩ
		BA479S	z_r	9			kΩ
Minority carrier lifetime	I_F=10mA, I_R=10mA		τ		4		µs

Typical Characteristics (T_j = 25°C unless otherwise specified)

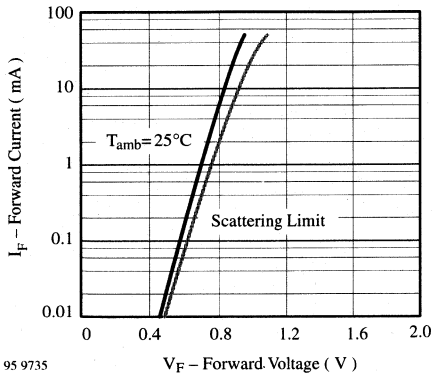

Figure 1. Forward Current vs. Forward Voltage

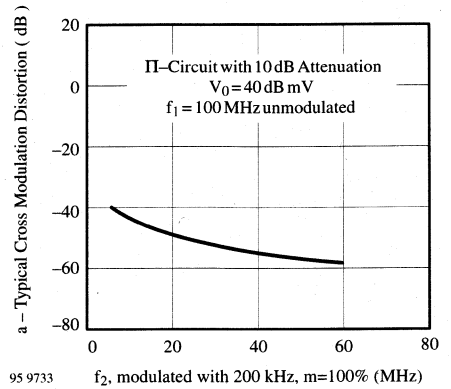

Figure 3. Typ. Cross Modulation Distortion vs. Frequency f_2

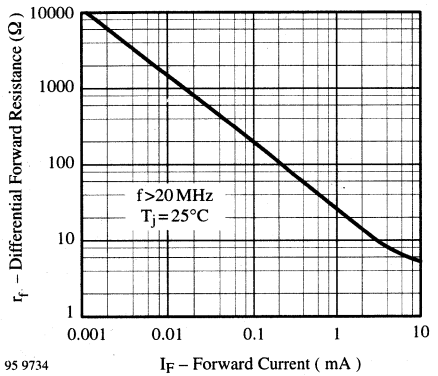

Figure 2. Differential Forward Resistance vs. Forward Current

Dimensions in mm

technical drawings
according to DIN
specifications

94 9366

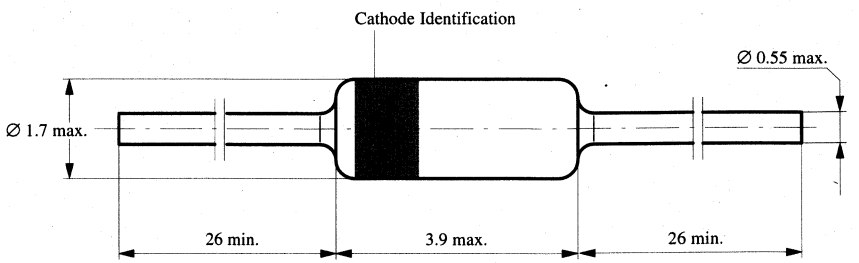

Standard Glass Case
54 A 2 DIN 41880
JEDEC DO 35
Weight max. 0.3 g

Silicon Planar Diode

Applications

General purpose

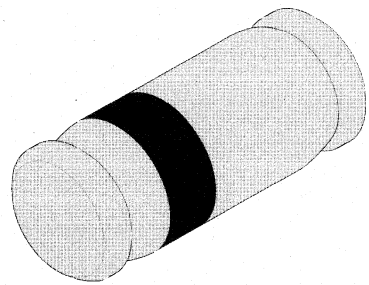

94 9371

Absolute Maximum Ratings

$T_j = 25°C$

Parameter	Test Conditions	Type	Symbol	Value	Unit
Peak reverse voltage, non repetitive			V_{RSM}	80	V
Reverse voltage			V_R	50	V
Peak forward surge current	t_p=1µs		I_{FSM}	2	A
Repetitive peak forward current			I_{FRM}	450	mA
Forward current			I_F	200	mA
Power dissipation			P_V	500	mW
Junction temperature			T_j	175	°C
Storage temperature range			T_{stg}	–55...+175	°C

Maximum Thermal Resistance

$T_j = 25°C$

Parameter	Test Conditions	Symbol	Value	Unit
Junction lead	T_L=constant	R_{thJL}	350	K/W
Junction ambient	on PC board 50mmx50mmx1.6mm	R_{thJA}	500	K/W

Characteristics

$T_j = 25°C$

Parameter	Test Conditions	Type	Symbol	Min	Typ	Max	Unit
Forward voltage	I_F=50mA		V_F			1.1	V
Reverse current	V_R=50V		I_R			1	µA
	V_R=20V		I_R			50	nA
	V_R=20V, T_j=150°C		I_R			50	µA
Breakdown voltage	I_R=100µA		$V_{(BR)}$	80			V
Reverse recovery time	I_F=10mA, I_R=10mA, i_R=1mA		t_{rr}			20	ns
Diode capacitance	V_R=0, f=1MHz		C_D			4	pF

Dimensions in mm

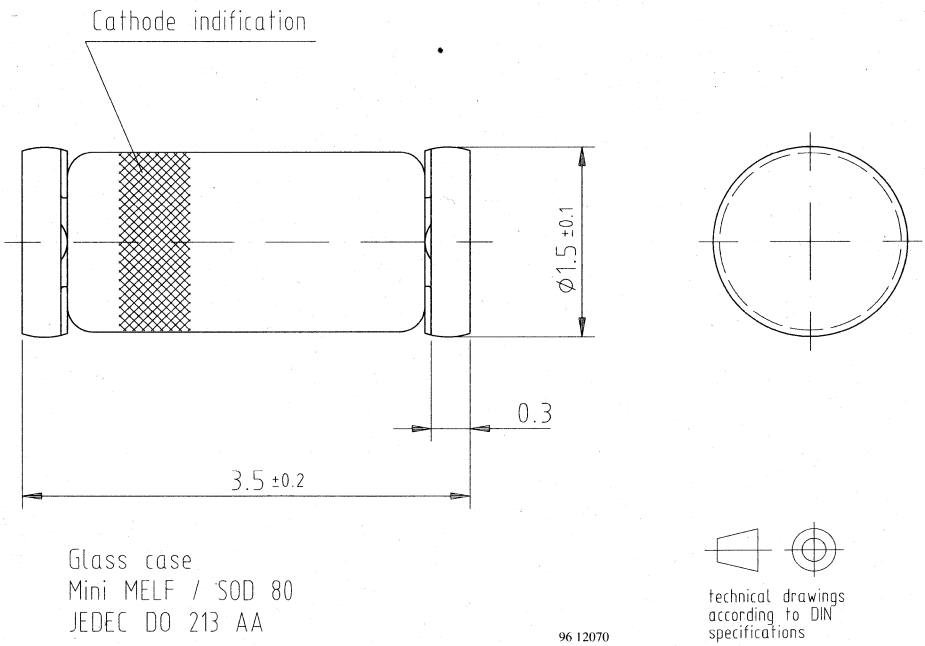

Silicon PIN Diodes

Features

- Wide frequency range 10 MHz to 1 GHz

Applications

Current controlled HF resistance in adjustable attenuators

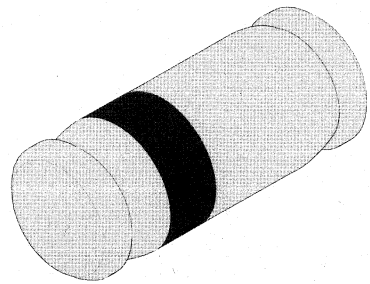

94 9371

Absolute Maximum Ratings

$T_j = 25°C$

Parameter	Test Conditions	Type	Symbol	Value	Unit
Reverse voltage			V_R	30	V
Forward current			I_F	50	mA
Junction temperature			T_j	125	°C
Storage temperature range			T_{stg}	–55...+125	°C

Maximum Thermal Resistance

$T_j = 25°C$

Parameter	Test Conditions	Symbol	Value	Unit
Junction ambient	on PC board 50mmx50mmx1.6mm	R_{thJA}	500	K/W

Characteristics

$T_j = 25°C$

Parameter	Test Conditions	Type	Symbol	Min	Typ	Max	Unit
Forward voltage	I_F=20mA		V_F			1	V
Reverse current	V_R=30 V		I_R			50	nA
Diode capacitance	f=100MHz, V_R=0		C_D			0.5	pF
Differential forward resistance	f=100MHz, I_F=1.5mA		r_f			50	Ω
Reverse impedance	f=100MHz, V_R=0	BA679	z_r	5			kΩ
		BA679S	z_r	9			kΩ
Minority carrier lifetime	I_F=10mA, I_R=10mA		τ		4		µs

Typical Characteristics (T_j = 25°C unless otherwise specified)

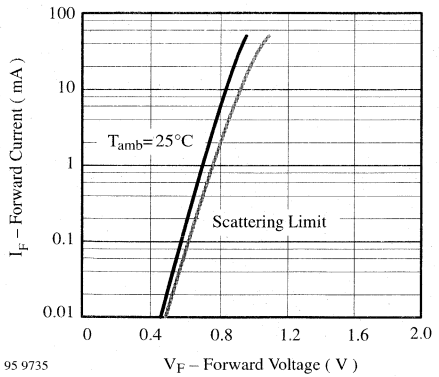

Figure 1. Forward Current vs. Forward Voltage

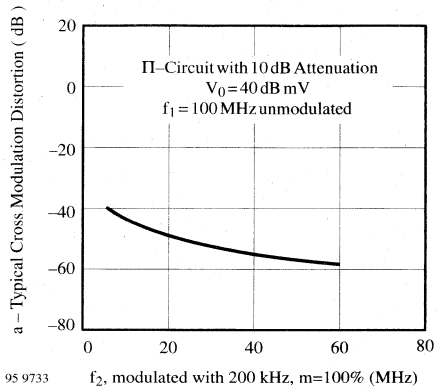

Figure 3. Typ. Cross Modulation Distortion vs. Frequency f_2

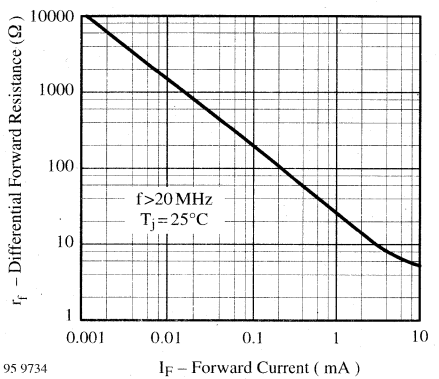

Figure 2. Differential Forward Resistance vs. Forward Current

Dimensions in mm

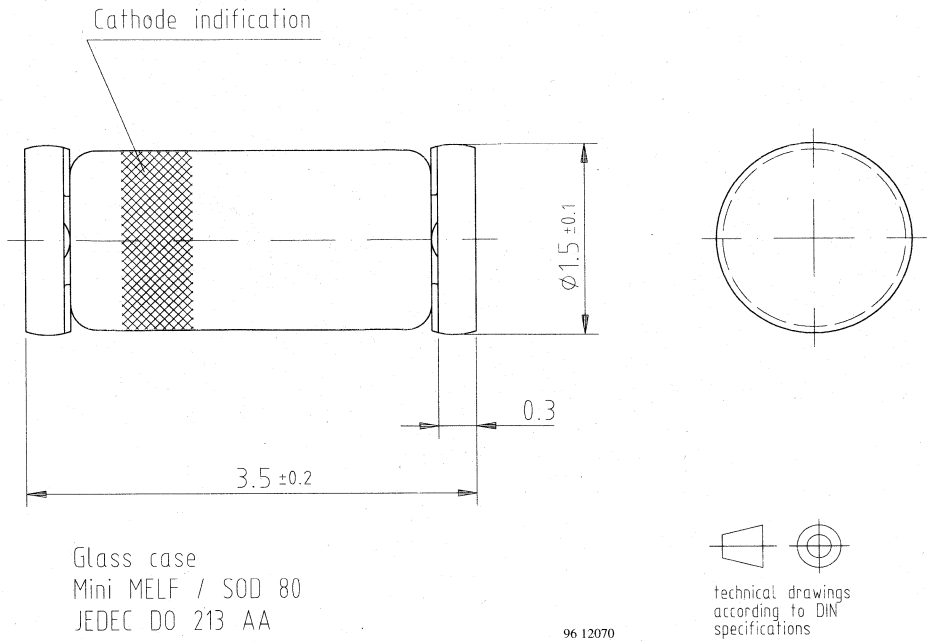

Silicon Planar Diodes

Features

- Low differential forward resistance
- Low diode capacitance
- High reverse impedance

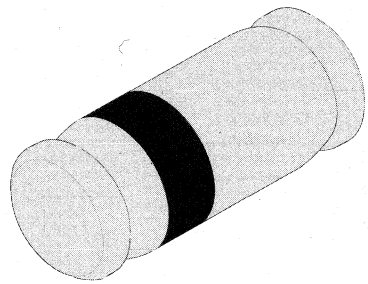

94 9371

Applications

Band switching in VHF–tuners

Absolute Maximum Ratings

$T_j = 25°C$

Parameter	Test Conditions	Type	Symbol	Value	Unit
Reverse voltage			V_R	35	V
Forward current			I_F	100	mA
Junction temperature			T_j	150	°C
Storage temperature range			T_{stg}	–55...+150	°C

Maximum Thermal Resistance

$T_j = 25°C$

Parameter	Test Conditions	Symbol	Value	Unit
Junction ambient	on PC board 50mmx50mmx1.6mm	R_{thJA}	500	K/W

Characteristics

$T_j = 25°C$

Parameter	Test Conditions	Type	Symbol	Min	Typ	Max	Unit
Forward voltage	I_F=100mA		V_F			1	V
Reverse current	V_R=20V		I_R			50	nA
Diode capacitance	f=100MHz, V_R=1V		C_D			1.5	pF
	f=100MHz, V_R=3V	BA682	C_D			1.25	pF
		BA683	C_D			1.2	pF
Differential forward resistance	f=200MHz, I_F=3mA	BA682	r_f			0.7	Ω
		BA683	r_f			1.2	Ω
	f=200MHz, I_F=10mA	BA682	r_f			0.5	Ω
		BA683	r_f			0.9	Ω

Typical Characteristics ($T_j = 25°C$ unless otherwise specified)

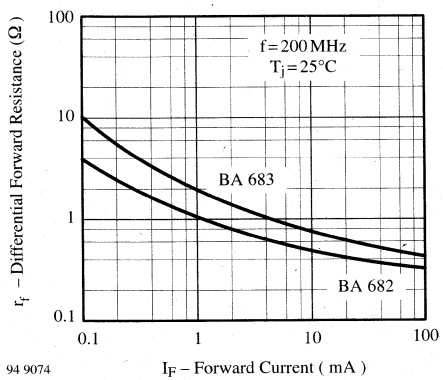

Figure 1. Differential Forward Resistance vs. Forward Current

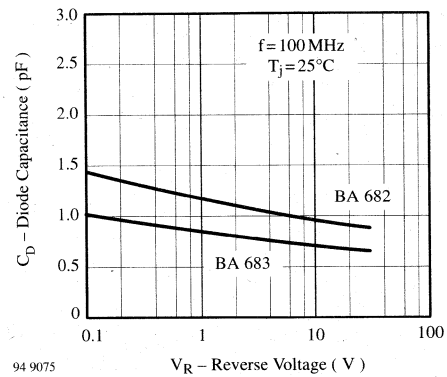

Figure 2. Diode Capacitance vs. Reverse Voltage

Dimensions in mm

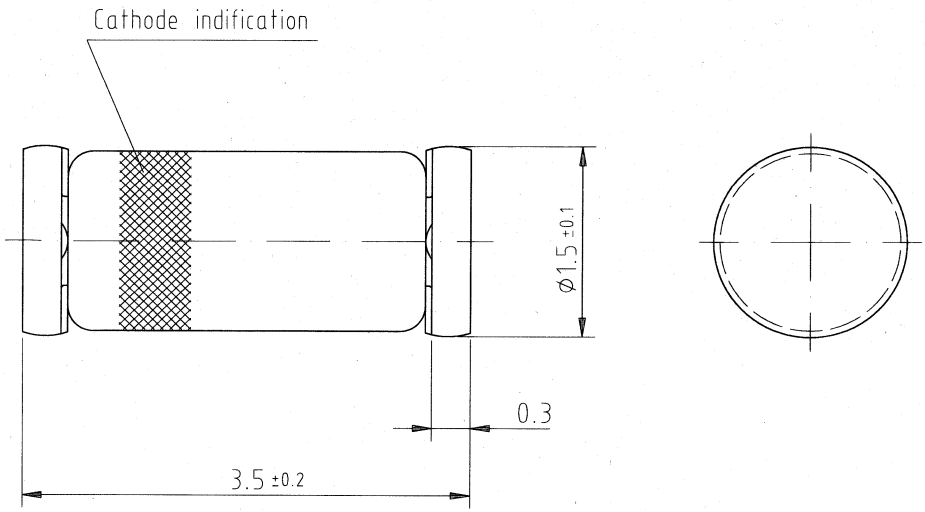

Glass case
Mini MELF / SOD 80
JEDEC DO 213 AA

96 12070

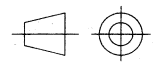

technical drawings
according to DIN
specifications

Silicon PIN Diodes

Features

- Wide frequency range 10 MHz to 1 GHz

Applications

Current controlled HF resistance in adjustable attenuators

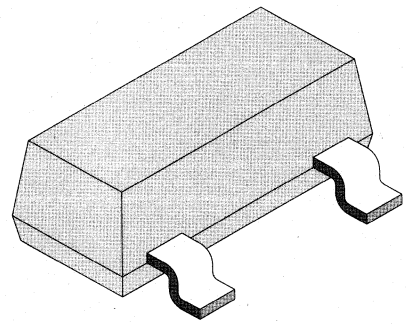

94 8550

Absolute Maximum Ratings

$T_j = 25°C$

Parameter	Test Conditions	Type	Symbol	Value	Unit
Reverse voltage			V_R	30	V
Forward current			I_F	50	mA
Junction temperature			T_j	125	°C
Storage temperature range			T_{stg}	–55...+125	°C

Maximum Thermal Resistance

$T_j = 25°C$

Parameter	Test Conditions	Symbol	Value	Unit
Junction ambient	on PC board 50mmx50mmx1.6mm	R_{thJA}	500	K/W

Characteristics

$T_j = 25°C$

Parameter	Test Conditions	Type	Symbol	Min	Typ	Max	Unit
Forward voltage	I_F=20mA		V_F			1	V
Reverse current	V_R=30 V		I_R			50	nA
Diode capacitance	f=100MHz, V_R=0		C_D			0.5	pF
Differential forward resistance	f=100MHz, I_F=1.5mA		r_f			50	Ω
Reverse impedance	f=100MHz, V_R=0	BA779	z_r	5			kΩ
		BA779S	z_r	9			kΩ
Minority carrier lifetime	I_F=10mA, I_R=10mA		τ		4		µs

Typical Characteristics (T_j = 25°C unless otherwise specified)

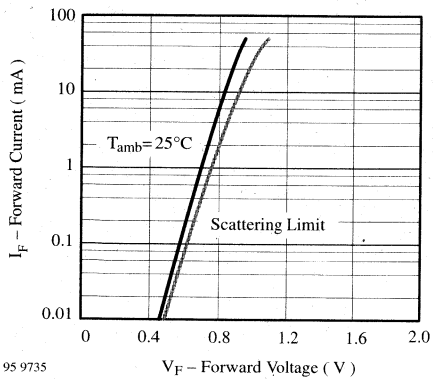

Figure 1. Forward Current vs. Forward Voltage

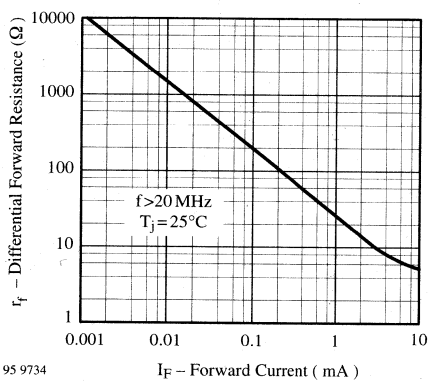

Figure 2. Differential Forward Resistance vs. Forward Current

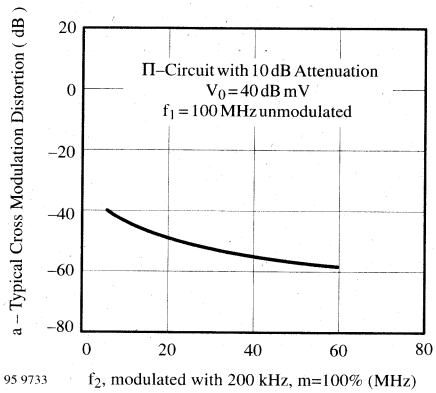

Figure 3. Typ. Cross Modulation Distortion vs. Frequency f_2

Dimensions in mm

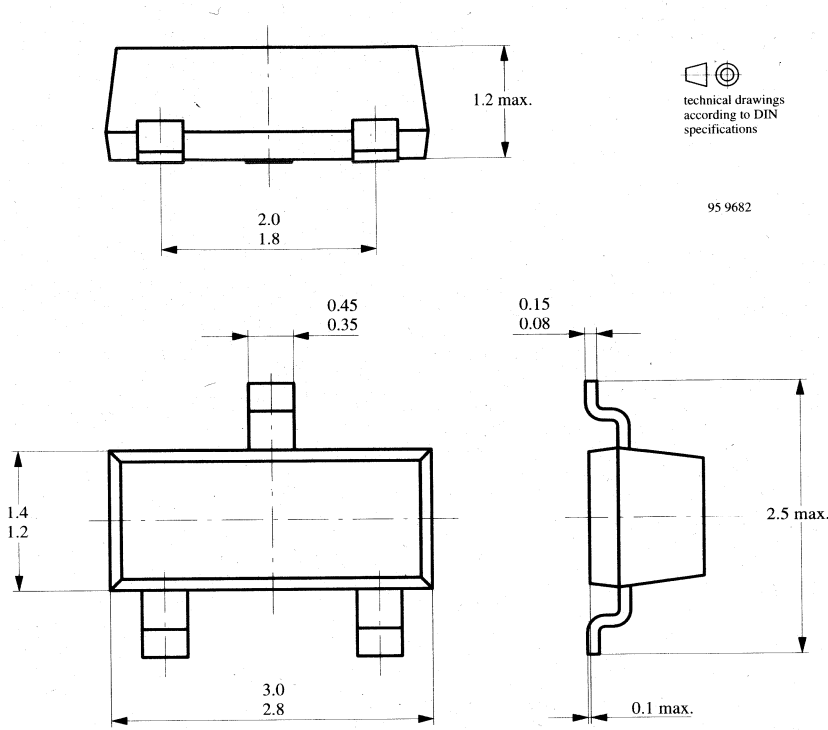

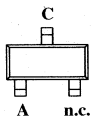

Standard Plastic Case
23 A 3 DIN 41869/8
JEDEC TO 236
SOT 23

94 9619

Silicon PIN Diodes

Features

- Wide frequency range 10 MHz to 1 GHz

Applications

Current controlled HF resistance in adjustable attenuators

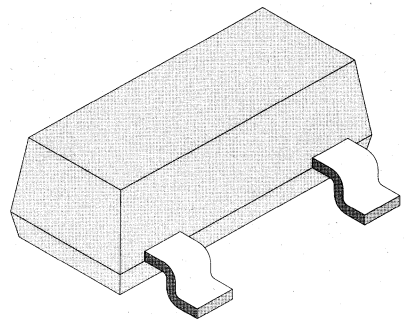

94 8550

Absolute Maximum Ratings

T_j = 25°C

Parameter	Test Conditions	Type	Symbol	Value	Unit
Reverse voltage			V_R	30	V
Forward current			I_F	50	mA
Junction temperature			T_j	125	°C
Storage temperature range			T_{stg}	–55...+125	°C

Maximum Thermal Resistance

T_j = 25°C

Parameter	Test Conditions	Symbol	Value	Unit
Junction ambient	on PC board 50mmx50mmx1.6mm	R_{thJA}	500	K/W

Characteristics

T_j = 25°C

Parameter	Test Conditions	Type	Symbol	Min	Typ	Max	Unit
Forward voltage	I_F=20mA		V_F			1	V
Reverse current	V_R=30 V		I_R			50	nA
Diode capacitance	f=100MHz, V_R=0		C_D			0.5	pF
Differential forward resistance	f=100MHz, I_F=1.5mA		r_f			50	Ω
Reverse impedance	f=100MHz, V_R=0		z_r	5			kΩ
Minority carrier lifetime	I_F=10mA, I_R=10mA		τ		4		µs

Dimensions in mm

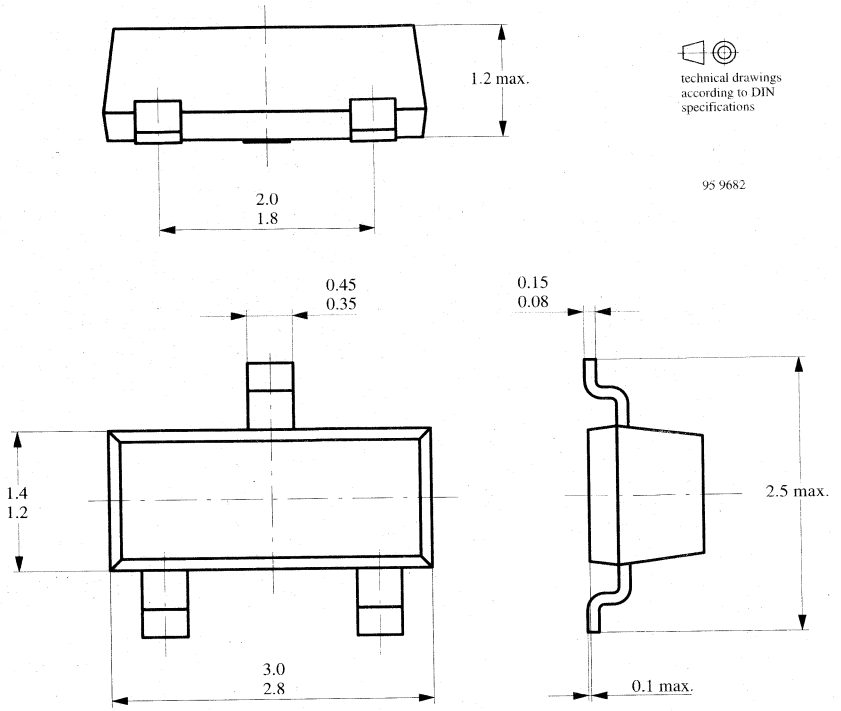

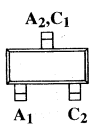

Standard Plastic Case
23 A 3 DIN 41869/8
JEDEC TO 236
SOT 23

94 9543

Silicon PIN Diodes

Features

- Wide frequency range 10 MHz to 1 GHz

Applications

Current controlled HF resistance in adjustable attenuators

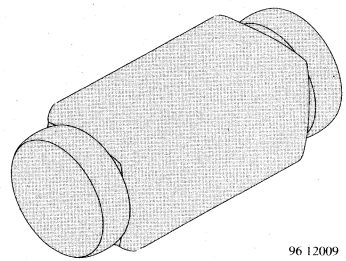

96 12009

Absolute Maximum Ratings

$T_j = 25°C$

Parameter	Test Conditions	Type	Symbol	Value	Unit
Reverse voltage			V_R	30	V
Forward current			I_F	50	mA
Junction temperature			T_j	125	°C
Storage temperature range			T_{stg}	–55...+125	°C

Maximum Thermal Resistance

$T_j = 25°C$

Parameter	Test Conditions	Symbol	Value	Unit
Junction ambient	on PC board 50mmx50mmx1.6mm	R_{thJA}	500	K/W

Characteristics

$T_j = 25°C$

Parameter	Test Conditions	Type	Symbol	Min	Typ	Max	Unit
Forward voltage	I_F=20mA		V_F			1	V
Reverse current	V_R=30 V		I_R			50	nA
Diode capacitance	f=100MHz, V_R=0		C_D			0.5	pF
Differential forward resistance	f=100MHz, I_F=1.5mA		r_f			50	Ω
Reverse impedance	f=100MHz, V_R=0	BA979	z_r	5			kΩ
		BA979S	z_r	9			kΩ
Minority carrier lifetime	I_F=10mA, I_R=10mA		τ		4		µs

Typical Characteristics (T_j = 25°C unless otherwise specified)

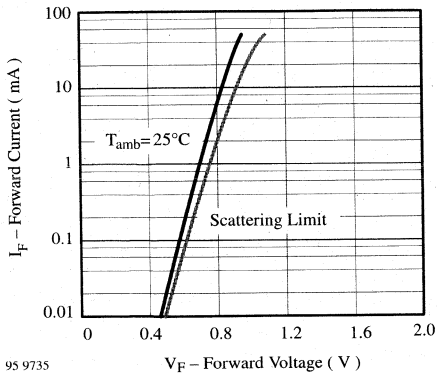

Figure 1. Forward Current vs. Forward Voltage

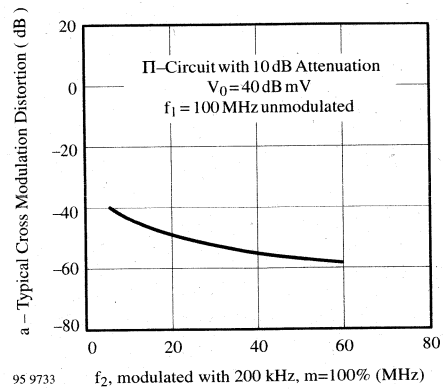

Figure 3. Typ. Cross Modulation Distortion vs. Frequency f_2

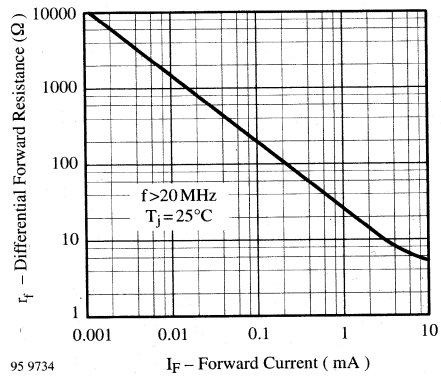

Figure 2. Differential Forward Resistance vs. Forward Current

Dimensions in mm

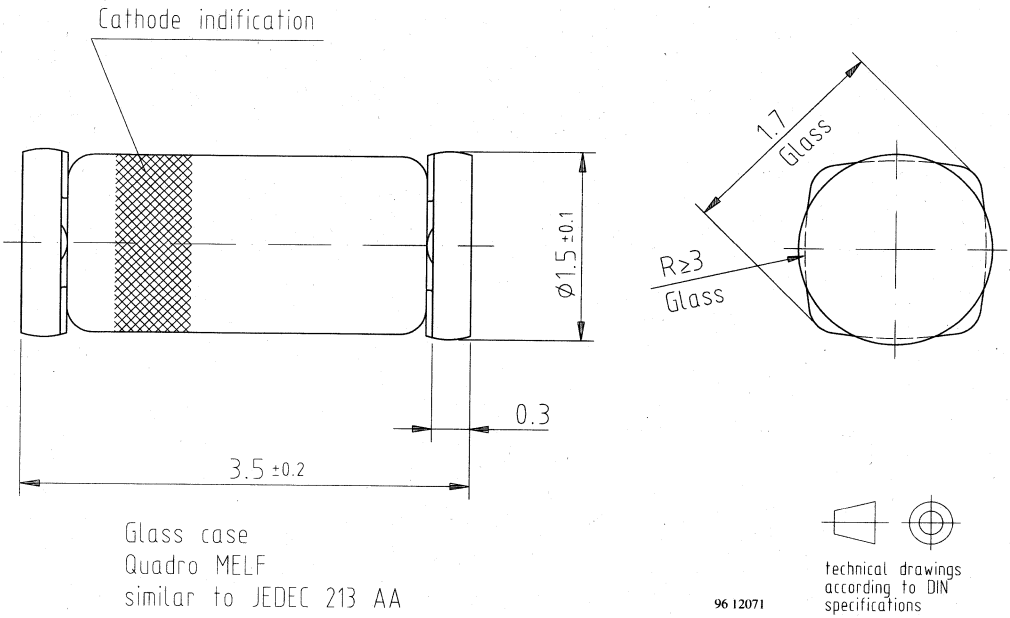

Silicon Planar Diodes

Features

- Low differential forward resistance
- Low diode capacitance
- High reverse impedance
- Quadro Melf package

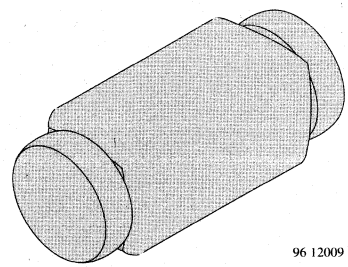

Applications

Band switching in VHF–tuners

Absolute Maximum Ratings

$T_j = 25°C$

Parameter	Test Conditions	Type	Symbol	Value	Unit
Reverse voltage			V_R	35	V
Forward current			I_F	100	mA
Junction temperature			T_j	150	°C
Storage temperature range			T_{stg}	–55...+150	°C

Maximum Thermal Resistance

$T_j = 25°C$

Parameter	Test Conditions	Symbol	Value	Unit
Junction ambient	on PC board 50mmx50mmx1.6mm	R_{thJA}	500	K/W

Characteristics

$T_j = 25°C$

Parameter	Test Conditions	Type	Symbol	Min	Typ	Max	Unit
Forward voltage	I_F=100mA		V_F			1	V
Reverse current	V_R=20V		I_R			50	nA
Diode capacitance	f=100MHz, V_R=1V		C_D			1.5	pF
	f=100MHz, V_R=3V	BA982	C_D			1.25	pF
		BA983	C_D			1.2	pF
Differential forward resistance	f=200MHz, I_F=3mA	BA982	r_f			0.7	Ω
		BA983	r_f			1.2	Ω
	f=200MHz, I_F=10mA	BA982	r_f			0.5	Ω
		BA983	r_f			0.9	Ω

Typical Characteristics ($T_j = 25°C$ unless otherwise specified)

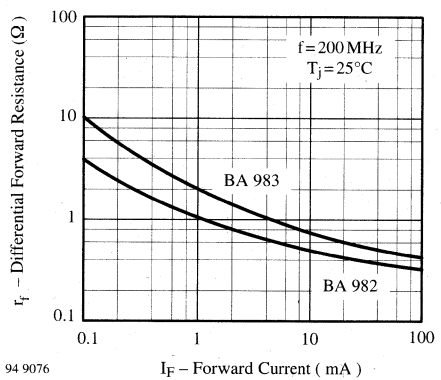

Figure 1. Differential Forward Resistance vs. Forward Current

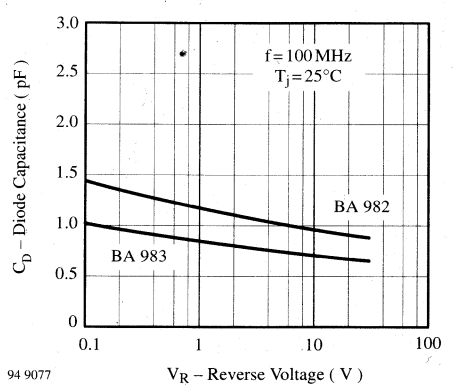

Figure 2. Diode Capacitance vs. Reverse Voltage

Dimensions in mm

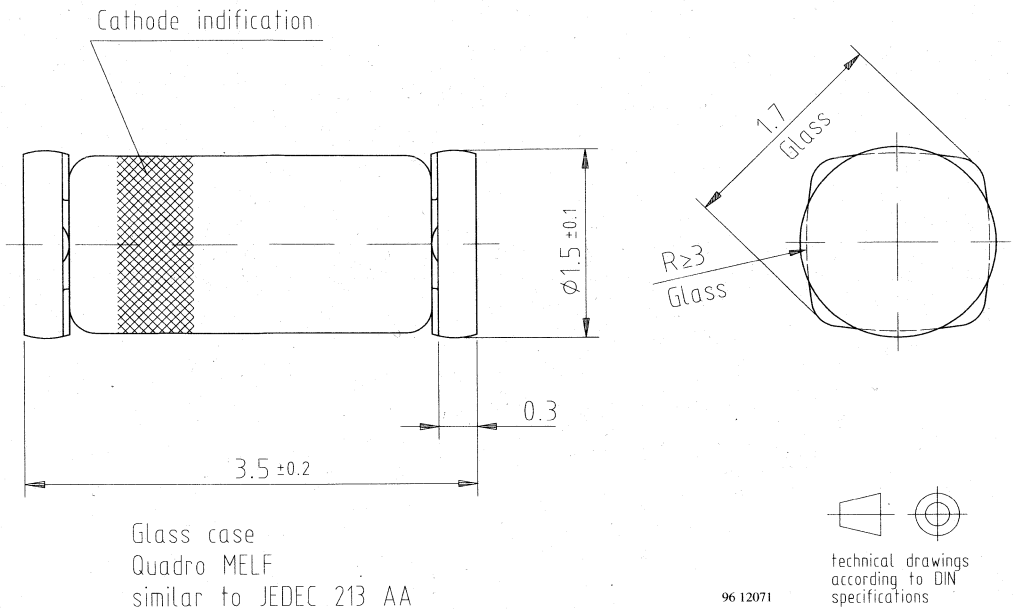

Silicon Planar Diodes

Features

- Saving space
- Hermetic sealed parts
- Fits onto SOD 323 footprints
- Electrical data identical with the devices BA682.BA683 / BA982.BA983
- Low differential forward resistance
- Low diode capacitance
- High reverse impedance

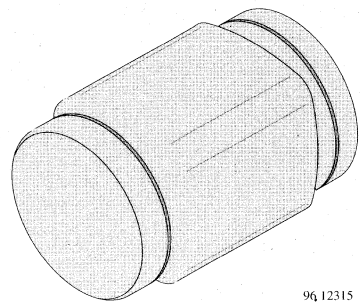

Applications

Band switching in VHF–tuners

Absolute Maximum Ratings

$T_j = 25°C$

Parameter	Test Conditions	Type	Symbol	Value	Unit
Reverse voltage			V_R	35	V
Forward current			I_F	100	mA
Junction temperature			T_j	150	°C
Storage temperature range			T_{stg}	–55...+150	°C

Maximum Thermal Resistance

$T_j = 25°C$

Parameter	Test Conditions	Symbol	Value	Unit
Junction ambient	mounted on epoxy–glass hard tissue, Fig. 1 35µm copper clad, 0.9 mm^2 copper area per electrode	R_{thJA}	500	K/W

Characteristics

$T_j = 25°C$

Parameter	Test Conditions	Type	Symbol	Min	Typ	Max	Unit
Forward voltage	I_F=100mA		V_F			1	V
Reverse current	V_R=20V		I_R			50	nA
Diode capacitance	f=100MHz, V_R=1V		C_D			1.5	pF
	f=100MHz, V_R=3V	BA1282	C_D			1.25	pF
	f=100MHz, V_R=3V	BA1283	C_D			1.2	pF
Differential forward resistance	f=200MHz, I_F=3mA	BA1282	r_f			0.7	Ω
	f=200MHz, I_F=3mA	BA1283	r_f			1.2	Ω
	f=200MHz, I_F=10mA	BA1282	r_f			0.5	Ω
	f=200MHz, I_F=10mA	BA1283	r_f			0.9	Ω

Typical Characteristics ($T_j = 25°C$ unless otherwise specified)

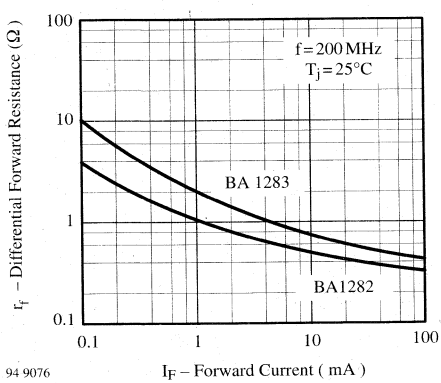

Figure 1. Differential Forward Resistance vs. Forward Current

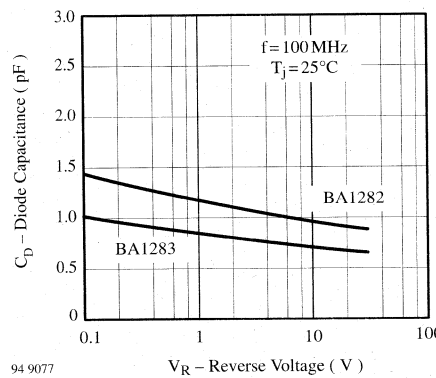

Figure 2. Diode Capacitance vs. Reverse Voltage

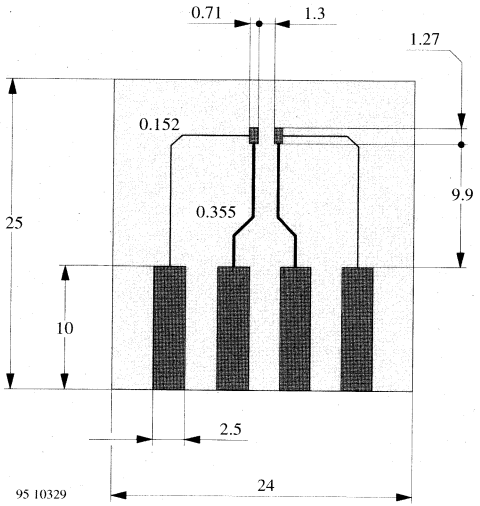

Figure 3. Board for R_{thJA} definition (in mm)

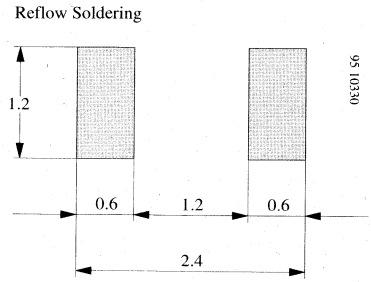

Figure 4. Recommended foot pads (in mm)

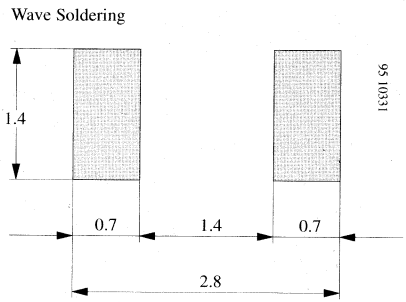

Figure 5. Recommended foot pads (in mm)

Dimensions in mm

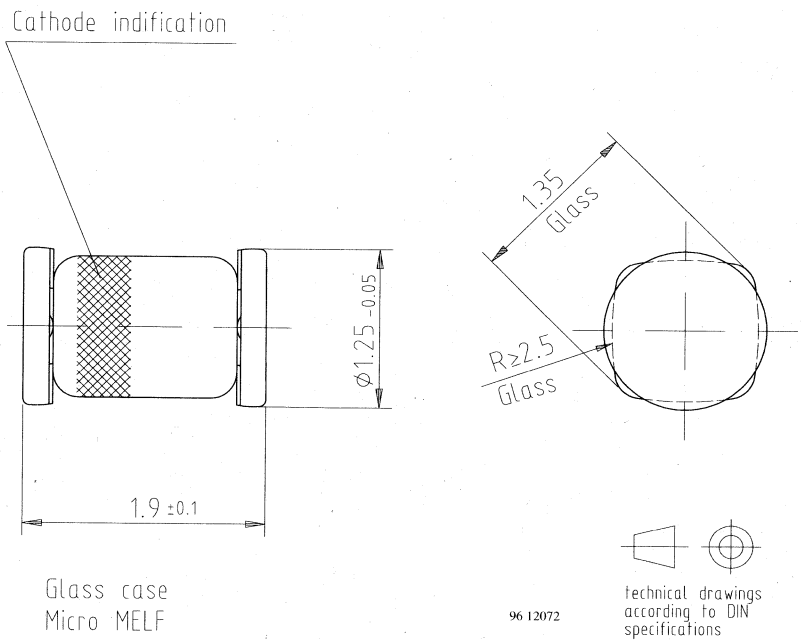

Silicon Planar Diodes

Features

- Very low reverse current

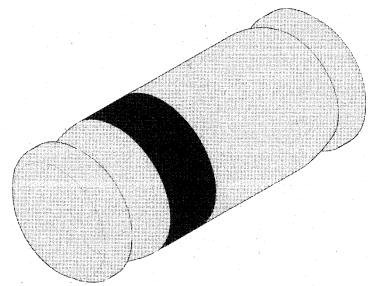

94 9371

Applications

Protection circuits, time delay circuits, peak follower circuits, logarithmic amplifiers

Absolute Maximum Ratings

$T_j = 25°C$

Parameter	Test Conditions	Type	Symbol	Value	Unit
Reverse voltage		BAQ33	V_R	30	V
		BAQ34	V_R	60	V
		BAQ35	V_R	125	V
Peak forward surge current	t_p=1µs		I_{FSM}	2	A
Forward current			I_F	200	mA
Junction temperature			T_j	200	°C
Storage temperature range			T_{stg}	–65...+200	°C

Maximum Thermal Resistance

$T_j = 25°C$

Parameter	Test Conditions	Symbol	Value	Unit
Junction ambient	on PC board 50mmx50mmx1.6mm	R_{thJA}	500	K/W

Characteristics

$T_j = 25°C$

Parameter	Test Conditions	Type	Symbol	Min	Typ	Max	Unit
Forward voltage	I_F=100mA		V_F			1	V
Reverse current	E ≦ 300lx, V_R		I_R		1	3	nA
	E ≦ 300lx, V_R, T_j=125°C		I_R			0.5	µA
	E ≦ 300lx, V_R=15V	BAQ33	I_R		0.5	1	nA
	E ≦ 300lx, V_R=30V	BAQ34	I_R		0.5	1	nA
	E ≦ 300lx, V_R=60V	BAQ35	I_R		0.5	1	nA
Breakdown voltage	I_R=5µA, t_p/T=0.01, t_p=0.3ms	BAQ33	$V_{(BR)}$	40			V
		BAQ34	$V_{(BR)}$	70			V
		BAQ35	$V_{(BR)}$	140			V
Diode capacitance	V_R=0, f=1MHz		C_D			3	pF

Typical Characteristics ($T_j = 25°C$ unless otherwise specified)

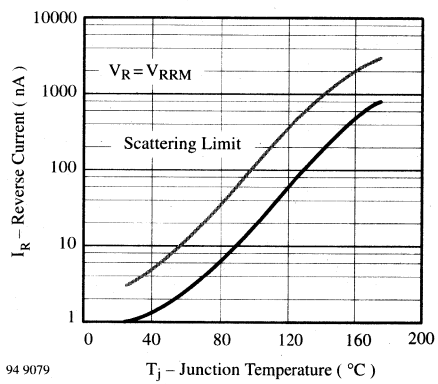

Figure 1. Reverse Current vs. Junction Temperature

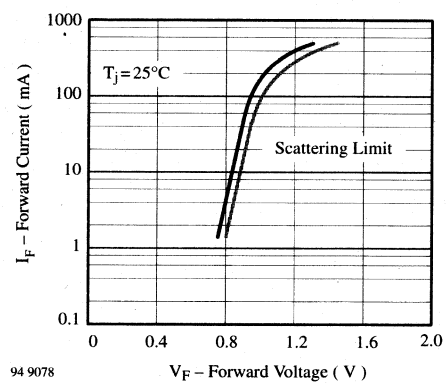

Figure 2. Forward Current vs. Forward Voltage

Dimensions in mm

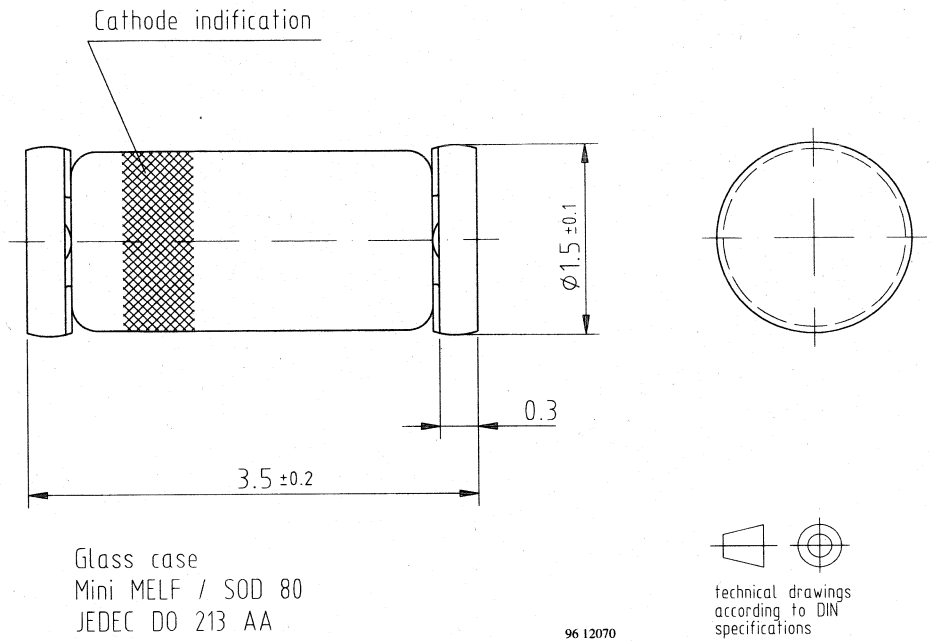

Silicon Planar Diodes

Features

- Very low reverse current

Applications

Protection circuits, time delay circuits, peak follower circuits, logarithmic amplifiers

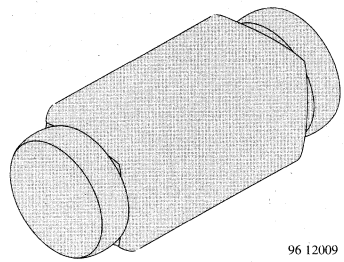

Absolute Maximum Ratings

$T_j = 25°C$

Parameter	Test Conditions	Type	Symbol	Value	Unit
Reverse voltage		BAQ133	V_R	30	V
		BAQ134	V_R	60	V
		BAQ135	V_R	125	V
Peak forward surge current	t_p=1µs		I_{FSM}	2	A
Forward current			I_F	200	mA
Junction temperature			T_j	200	°C
Storage temperature range			T_{stg}	–65...+200	°C

Maximum Thermal Resistance

$T_j = 25°C$

Parameter	Test Conditions	Symbol	Value	Unit
Junction ambient	on PC board 50mmx50mmx1.6mm	R_{thJA}	500	K/W

Characteristics

$T_j = 25°C$

Parameter	Test Conditions	Type	Symbol	Min	Typ	Max	Unit
Forward voltage	I_F=100mA		V_F			1	V
Reverse current	E≦300lx, V_R		I_R		1	3	nA
	E≦300lx, V_R, T_j=125°C		I_R			0.5	µA
	E≦300lx, V_R=15V	BAQ133	I_R		0.5	1	nA
	E≦300lx, V_R=30V	BAQ134	I_R		0.5	1	nA
	E≦300lx, V_R=60V	BAQ135	I_R		0.5	1	nA
Breakdown voltage	I_R=5µA, t_p/T=0.01, t_p=0.3ms	BAQ133	$V_{(BR)}$	40			V
		BAQ134	$V_{(BR)}$	70			V
		BAQ135	$V_{(BR)}$	140			V
Diode capacitance	V_R=0, f=1MHz		C_D			3	pF

Typical Characteristics ($T_j = 25°C$ unless otherwise specified)

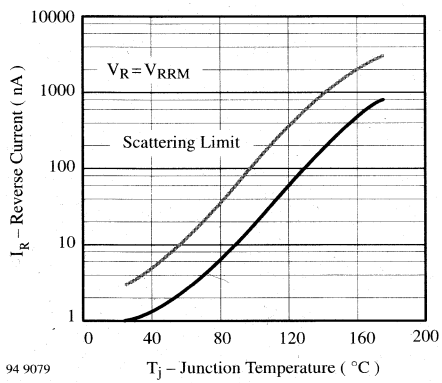

Figure 1. Reverse Current vs. Junction Temperature

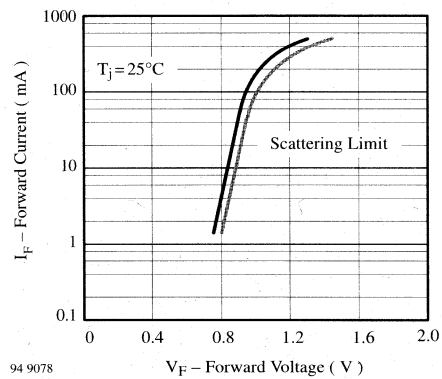

Figure 2. Forward Current vs. Forward Voltage

Dimensions in mm

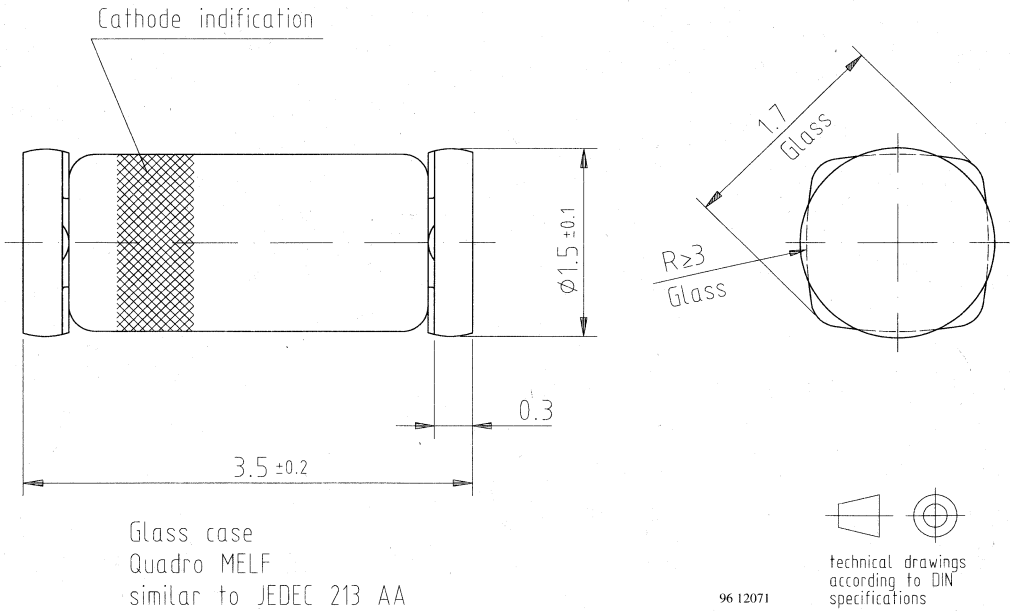

Silicon Planar Diodes

Features

- Saving space
- Hermetic sealed parts
- Fits onto SOD 323 / SOT 23 footprints
- Electrical data identical with the devices BAQ33...BAQ35 / BAQ133...BAQ135
- Very low reverse current

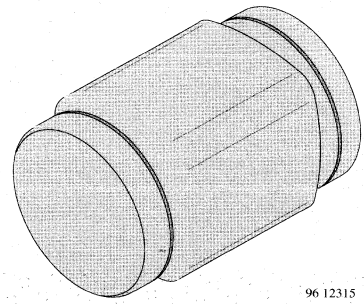

Applications

Protection circuits, time delay circuits, peak follower circuits, logarithmic amplifiers

Absolute Maximum Ratings

$T_j = 25°C$

Parameter	Test Conditions	Type	Symbol	Value	Unit
Reverse voltage		BAQ333	V_R	30	V
		BAQ334	V_R	60	V
		BAQ335	V_R	125	V
Peak forward surge current	t_p=1µs		I_{FSM}	2	A
Forward current			I_F	200	mA
Junction temperature			T_j	200	°C
Storage temperature range			T_{stg}	–65...+200	°C

Maximum Thermal Resistance

$T_j = 25°C$

Parameter	Test Conditions	Symbol	Value	Unit
Junction ambient	mounted on epoxy–glass hard tissue, Fig. 1 35µm copper clad, 0.9 mm^2 copper area per electrode	R_{thJA}	500	K/W

Characteristics

T_j = 25°C

Parameter	Test Conditions	Type	Symbol	Min	Typ	Max	Unit
Forward voltage	I_F=100mA		V_F			1	V
Reverse current	E≦300lx, V_R		I_R		1	3	nA
	E≦300lx, V_R, T_j=125°C		I_R			0.5	µA
	E≦300lx, V_R=15V	BAQ333	I_R		0.5	1	nA
	E≦300lx, V_R=30V	BAQ334	I_R		0.5	1	nA
	E≦300lx, V_R=60V	BAQ335	I_R		0.5	1	nA
Breakdown voltage	I_R=5µA, t_p/T=0.01, t_p=0.3ms	BAQ333	$V_{(BR)}$	40			V
		BAQ334	$V_{(BR)}$	70			V
		BAQ335	$V_{(BR)}$	140			V
Diode capacitance	V_R=0, f=1MHz		C_D			3	pF

Typical Characteristics (T_j = 25°C unless otherwise specified)

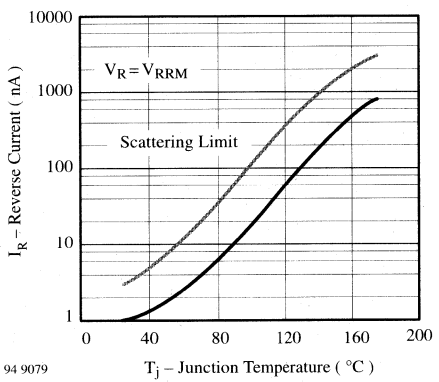

Figure 1. Reverse Current vs. Junction Temperature

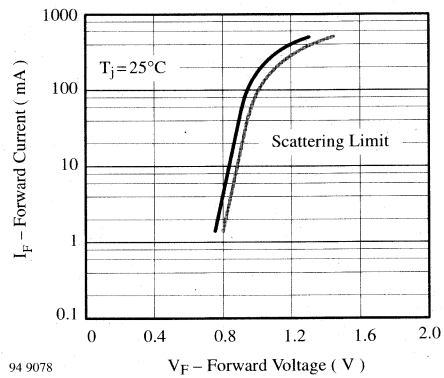

Figure 2. Forward Current vs. Forward Voltage

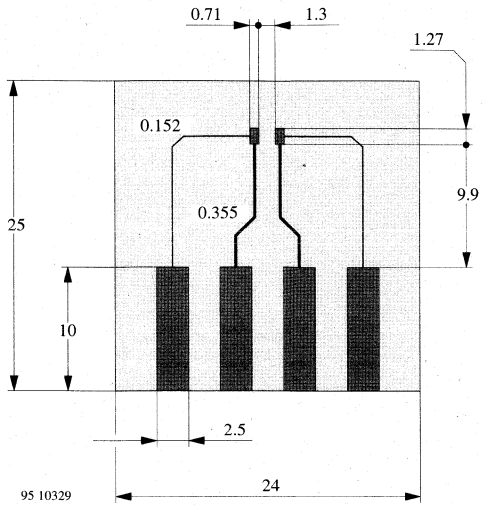

Figure 3. Board for R_{thJA} definition (in mm)

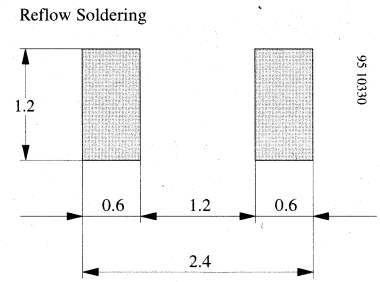

Figure 4. Recommended foot pads (in mm)

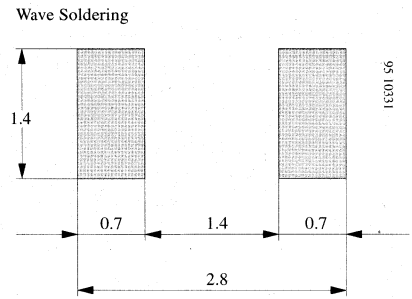

Figure 5. Recommended foot pads (in mm)

Dimensions in mm

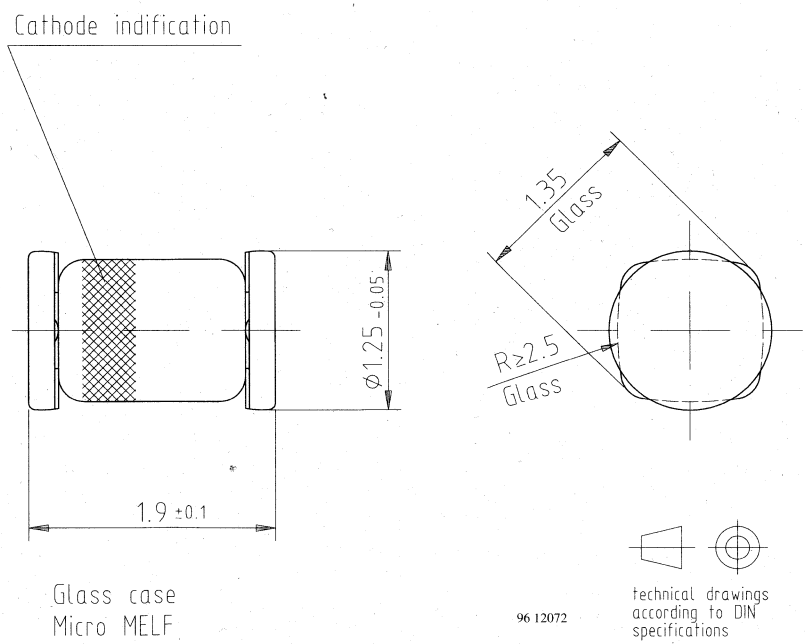

Silicon Planar Diodes

Features

- Very low reverse current

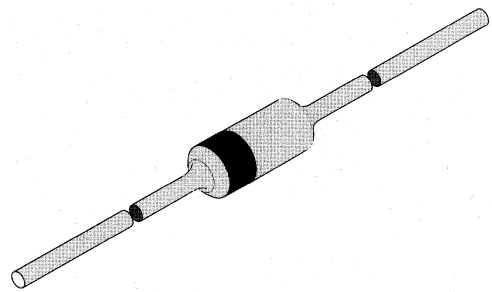

94 9367

Applications

Protection circuits, time delay circuits, peak follower circuits, logarithmic amplifiers

Absolute Maximum Ratings

$T_j = 25°C$

Parameter	Test Conditions	Type	Symbol	Value	Unit
Reverse voltage		BAS33	V_R	30	V
		BAS34	V_R	60	V
Peak forward surge current	t_p=1µs		I_{FSM}	2	A
Forward current			I_F	200	mA
Junction temperature			T_j	200	°C
Storage temperature range			T_{stg}	–65...+200	°C

Maximum Thermal Resistance

$T_j = 25°C$

Parameter	Test Conditions	Symbol	Value	Unit
Junction ambient	l=4mm, T_L=constant	R_{thJA}	350	K/W

Characteristics

$T_j = 25°C$

Parameter	Test Conditions	Type	Symbol	Min	Typ	Max	Unit
Forward voltage	I_F=100mA		V_F			1	V
Reverse current	E≦300lx, V_R		I_R		1	3	nA
	E≦300lx, V_R, T_j=125°C		I_R			0.5	µA
	E≦300lx, V_R=15V	BAS33	I_R		0.5	1	nA
	E≦300lx, V_R=30V	BAS34	I_R		0.5	1	nA
Breakdown voltage	I_R=5µA, t_p/T=0.01, t_p=0.3ms	BAS33	$V_{(BR)}$	40			V
		BAS34	$V_{(BR)}$	70			V
Diode capacitance	V_R=0, f=1MHz		C_D			3	pF

Typical Characteristics (T_j = 25°C unless otherwise specified)

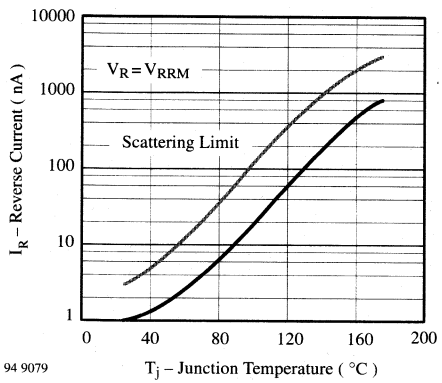

Figure 1. Reverse Current vs. Junction Temperature

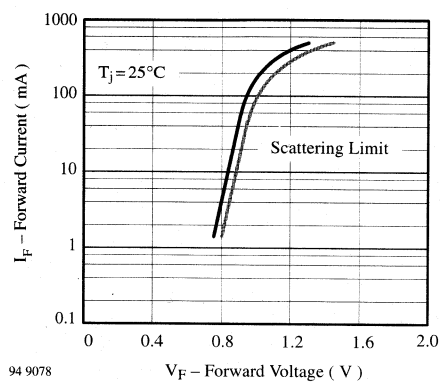

Figure 2. Forward Current vs. Forward Voltage

Dimensions in mm

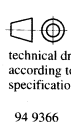

technical drawings according to DIN specifications

94 9366

Standard Glass Case
54 A 2 DIN 41880
JEDEC DO 35
Weight max. 0.3 g

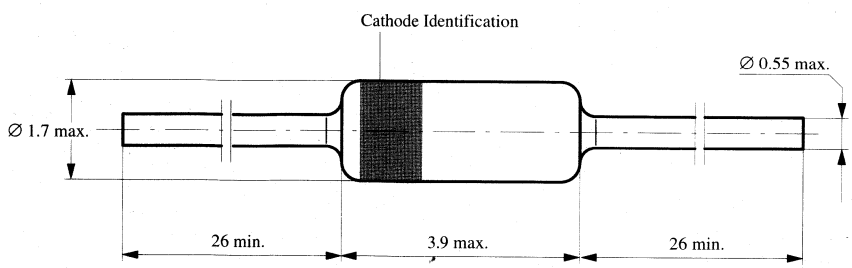

Silicon Epitaxial Planar Diodes

Applications

General purposes

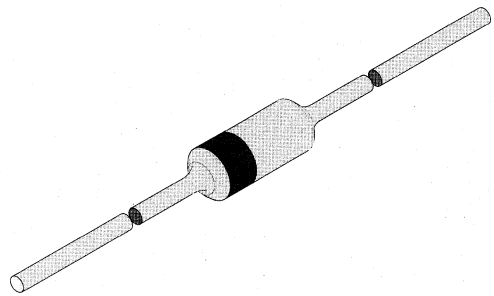

94 9367

Absolute Maximum Ratings

$T_j = 25°C$

Parameter	Test Conditions	Type	Symbol	Value	Unit
Peak reverse voltage		BAV17	V_{RRM}	25	V
		BAV18	V_{RRM}	60	V
		BAV19	V_{RRM}	120	V
		BAV20	V_{RRM}	200	V
		BAV21	V_{RRM}	250	V
Reverse voltage		BAV17	V_R	20	V
		BAV18	V_R	50	V
		BAV19	V_R	100	V
		BAV20	V_R	150	V
		BAV21	V_R	200	V
Forward current			I_F	250	mA
Peak forward surge current	t_p=1s, T_j=25°C		I_{FSM}	1	A
Forward peak current	f=50Hz		I_{FM}	625	mA
Junction temperature			T_j	175	°C
Storage temperature range			T_{stg}	–65...+175	°C

Maximum Thermal Resistance

$T_j = 25°C$

Parameter	Test Conditions	Symbol	Value	Unit
Junction ambient	l=4mm, T_L=constant	R_{thJA}	350	K/W

Characteristics

T_j = 25°C

Parameter	Test Conditions	Type	Symbol	Min	Typ	Max	Unit
Forward voltage	I_F=100mA		V_F			1	V
Reverse current	V_R=20V	BAV17	I_R			100	nA
	V_R=50V	BAV18	I_R			100	nA
	V_R=100V	BAV19	I_R			100	nA
	V_R=150V	BAV20	I_R			100	nA
	V_R=200V	BAV21	I_R			100	nA
Reverse current	T_j=100°C, V_R= 20V	BAV17	I_R			15	µA
	T_j=100°C, V_R= 50V	BAV18	I_R			15	µA
	T_j=100°C, V_R=100V	BAV19	I_R			15	µA
	T_j=100°C, V_R=150V	BAV20	I_R			15	µA
	T_j=100°C, V_R=200V	BAV21	I_R			15	µA
Breakdown voltage	I_R=100µA, t_p/T=0.01, t_p=0.3ms	BAV17	$V_{(BR)}$	25			V
		BAV18	$V_{(BR)}$	60			V
		BAV19	$V_{(BR)}$	120			V
		BAV20	$V_{(BR)}$	200			V
		BAV21	$V_{(BR)}$	250			V
Diode capacitance	V_R=0, f=1MHz		C_D		1.5		pF
Differential forward resistance	I_F=10mA		r_f		5		Ω
Reverse recovery time	I_F=I_R=30mA, i_R=3mA, R_L=100Ω		t_{rr}			50	ns

Typical Characteristics (T_j = 25°C unless otherwise specified)

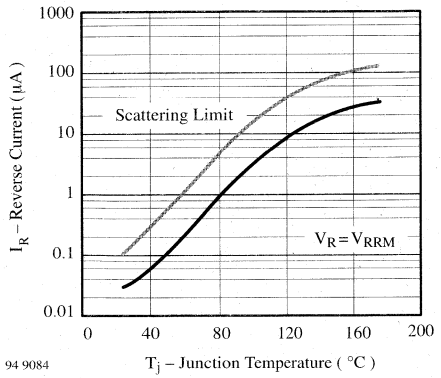

Figure 1. Reverse Current vs. Junction Temperature

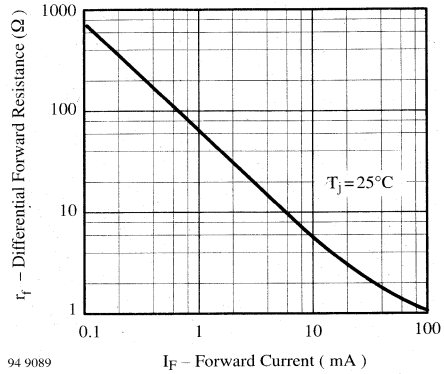

Figure 3. Differential Forward Resistance vs. Forward Current

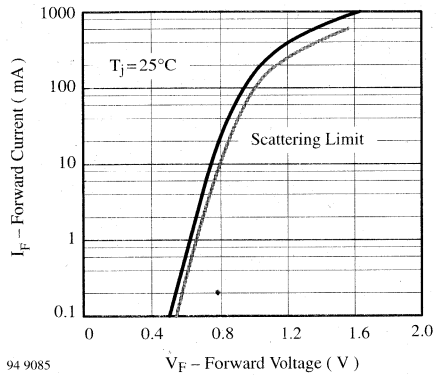

Figure 2. Forward Current vs. Forward Voltage

Dimensions in mm

technical drawings
according to DIN
specifications

94 9366

Standard Glass Case
54 A 2 DIN 41880
JEDEC DO 35
Weight max. 0.3 g

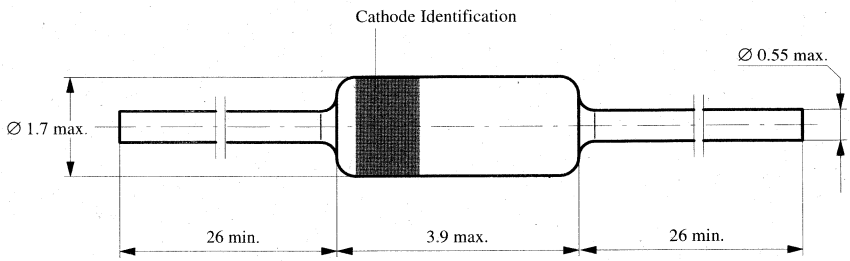

Silicon Planar Dual Diode

Features

- Common cathode

Applications

Fast switches in thick and thin film circuits

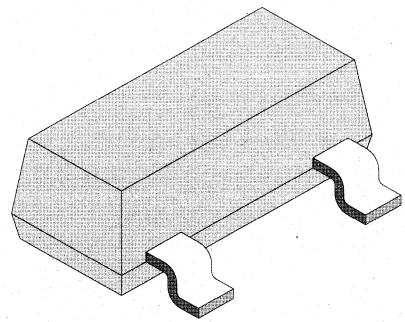

94 8550

Absolute Maximum Ratings

$T_j = 25°C$

Parameter	Test Conditions	Type	Symbol	Value	Unit
Reverse voltage			V_R	70	V
Peak forward surge current	t_p=1µs		I_{FSM}	4.5	A
Repetitive peak forward current			I_{FRM}	450	mA
Forward current	D1+D2		I_F	250	mA
Power dissipation			P_{tot}	300	mW
Junction temperature			T_j	150	°C
Storage temperature range			T_{stg}	–55...+150	°C

Maximum Thermal Resistance

$T_j = 25°C$

Parameter	Test Conditions	Symbol	Value	Unit
Junction ambient	on ceramic substrate 8mmx10mmx0.7mm	R_{thJA}	430	K/W

Characteristics

$T_j = 25°C$

Parameter	Test Conditions	Type	Symbol	Min	Typ	Max	Unit
Forward voltage	I_F=1mA		V_F			715	mV
	I_F=10mA		V_F			855	mV
	I_F=50mA		V_F			1	V
	I_F=150mA		V_F			1.25	V
Reverse current	V_R=70V		I_R			2.5	µA
	V_R=70V, T_j=150°C		I_R			50	µA
	V_R=25V, T_j=150°C		I_R			30	µA
Reverse recovery time	I_F=10mA, I_R=10mA, i_R=1mA		t_{rr}			6	ns
Diode capacitance	V_R=0, f=1MHz		C_D			1.5	pF

Dimensions in mm

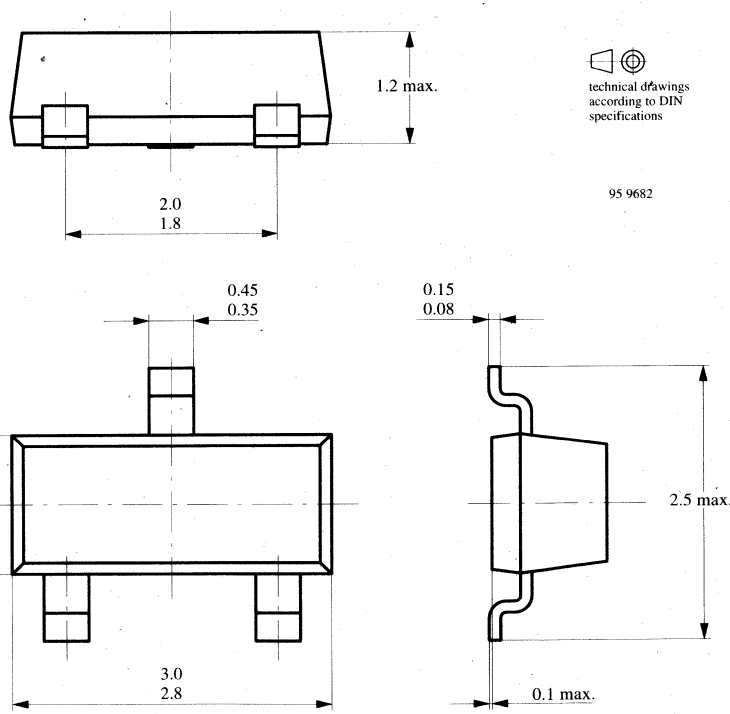

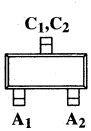

Standard Plastic Case
23 A 3 DIN 41869/8
JEDEC TO 236
SOT 23

94 9541

Silicon Planar Dual Diode

Features

- Connected in series

Applications

Fast switches in thick and thin film circuits

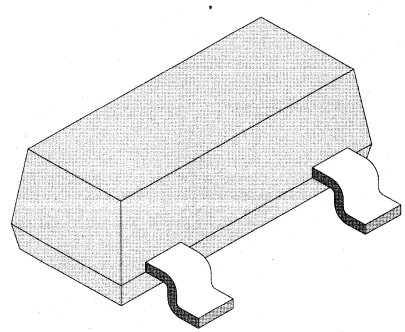

94 8550

Absolute Maximum Ratings

$T_j = 25°C$

Parameter	Test Conditions	Type	Symbol	Value	Unit
Reverse voltage			V_R	70	V
Peak forward surge current	t_p=1µs		I_{FSM}	4.5	A
Repetitive peak forward current			I_{FRM}	450	mA
Forward current	D1+D2		I_F	250	mA
Power dissipation			P_{tot}	300	mW
Junction temperature			T_j	150	°C
Storage temperature range			T_{stg}	–55...+150	°C

Maximum Thermal Resistance

$T_j = 25°C$

Parameter	Test Conditions	Symbol	Value	Unit
Junction ambient	on ceramic substrate 8mmx10mmx0.7mm	R_{thJA}	430	K/W

Characteristics

$T_j = 25°C$

Parameter	Test Conditions	Type	Symbol	Min	Typ	Max	Unit
Forward voltage	I_F=1mA		V_F			715	mV
	I_F=10mA		V_F			855	mV
	I_F=50mA		V_F			1	V
	I_F=150mA		V_F			1.25	V
Reverse current	V_R=70V		I_R			2.5	µA
	V_R=70V, T_j=150°C		I_R			50	µA
	V_R=25V, T_j=150°C		I_R			30	µA
Reverse recovery time	I_F=10mA, I_R=10mA, i_R=1mA		t_{rr}			6	ns
Diode capacitance	V_R=0, f=1MHz		C_D			1.5	pF

Dimensions in mm

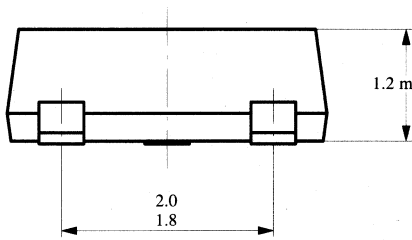

technical drawings
according to DIN
specifications

95 9682

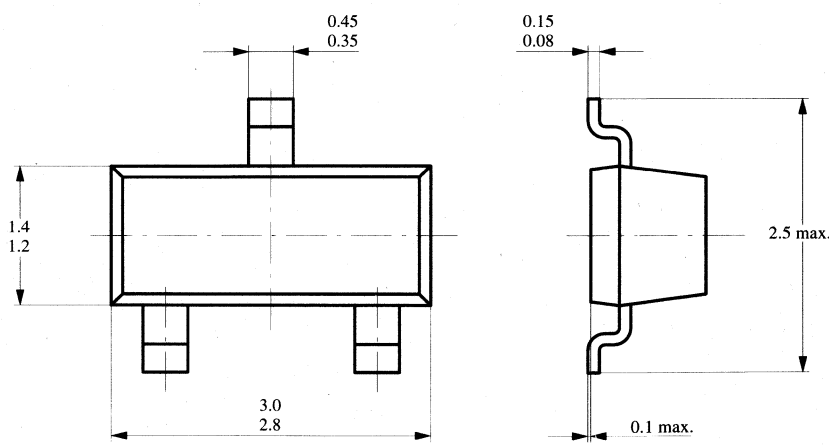

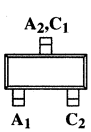

Standard Plastic Case
23 A 3 DIN 41869/8
JEDEC TO 236
SOT 23

94 9543

Silicon Epitaxial Planar Diodes

Applications

General purposes

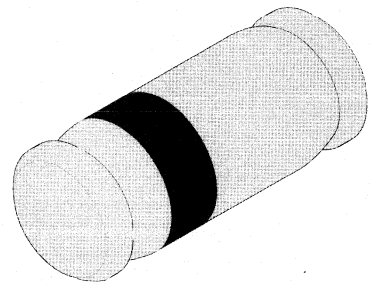

94 9371

Absolute Maximum Ratings

$T_j = 25°C$

Parameter	Test Conditions	Type	Symbol	Value	Unit
Repetitive peak reverse voltage		BAV100	V_{RRM}	60	V
		BAV101	V_{RRM}	120	V
		BAV102	V_{RRM}	200	V
		BAV103	V_{RRM}	250	V
Reverse voltage		BAV100	V_R	50	V
		BAV101	V_R	100	V
		BAV102	V_R	150	V
		BAV103	V_R	200	V
Peak forward surge current	t_p=1s		I_{FSM}	1	A
Repetitive peak forward current			I_{FRM}	625	mA
Forward current			I_F	250	mA
Power dissipation			P_V	500	mW
Junction temperature			T_j	175	°C
Storage temperature range			T_{stg}	–65...+175	°C

Maximum Thermal Resistance

$T_j = 25°C$

Parameter	Test Conditions	Symbol	Value	Unit
Junction lead		R_{thJL}	350	K/W
Junction ambient	on PC board 50mmx50mmx1.6mm	R_{thJA}	500	K/W

Characteristics

$T_j = 25°C$

Parameter	Test Conditions	Type	Symbol	Min	Typ	Max	Unit
Forward voltage	I_F=100mA		V_F			1	V
Reverse current	V_R=50V	BAV100	I_R			100	nA
	V_R=100V	BAV101	I_R			100	nA
	V_R=150V	BAV102	I_R			100	nA
	V_R=200V	BAV103	I_R			100	nA
Reverse current	T_j=100°C, V_R= 50V	BAV100	I_R			15	µA
	T_j=100°C, V_R=100V	BAV101	I_R			15	µA
	T_j=100°C, V_R=150V	BAV102	I_R			15	µA
	T_j=100°C, V_R=200V	BAV103	I_R			15	µA
Breakdown voltage	I_R=100µA, t_p/T=0.01, t_p=0.3ms	BAV100	$V_{(BR)}$	60			V
		BAV101	$V_{(BR)}$	120			V
		BAV102	$V_{(BR)}$	200			V
		BAV103	$V_{(BR)}$	250			V
Diode capacitance	V_R=0, f=1MHz		C_D		1.5		pF
Differential forward resistance	I_F=10mA		r_f		5		Ω
Reverse recovery time	I_F=I_R=30mA, i_R=3mA, R_L=100Ω		t_{rr}			50	ns

Typical Characteristics ($T_j = 25°C$ unless otherwise specified)

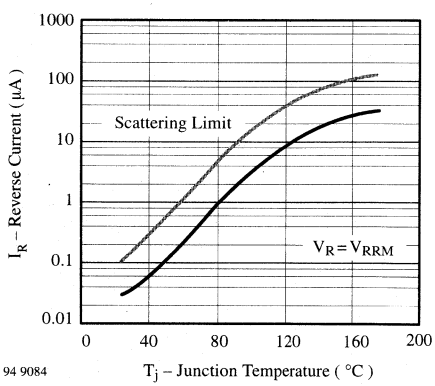

Figure 1. Reverse Current vs. Junction Temperature

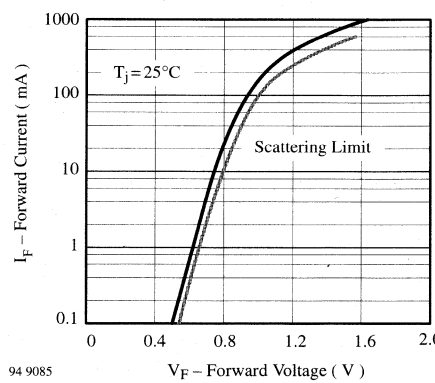

Figure 2. Forward Current vs. Forward Voltage

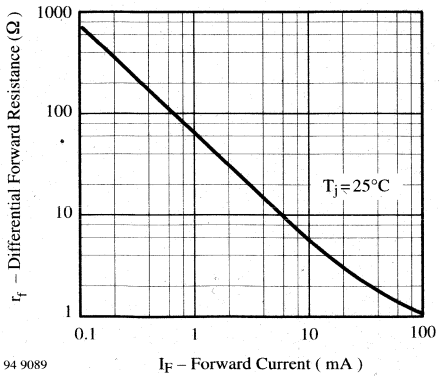

Figure 3. Differential Forward Resistance vs. Forward Current

Dimensions in mm

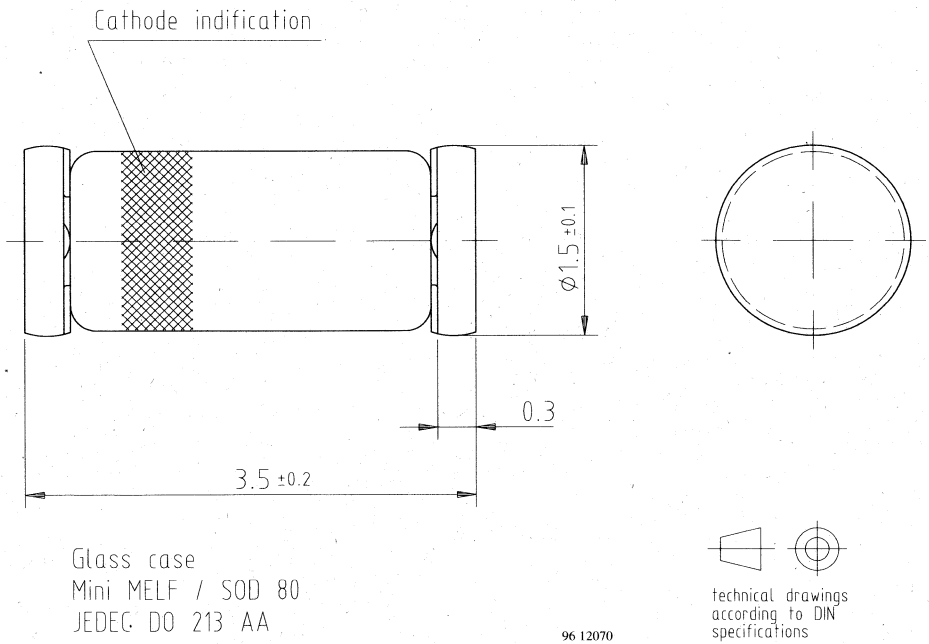

Silicon Epitaxial Planar Diodes

Applications

General purposes

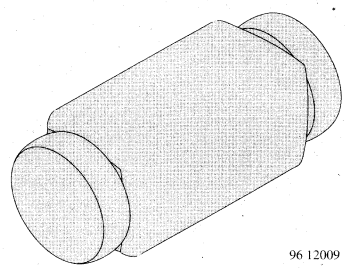

Absolute Maximum Ratings

$T_j = 25°C$

Parameter	Test Conditions	Type	Symbol	Value	Unit
Peak reverse voltage		BAV200	V_{RRM}	60	V
		BAV201	V_{RRM}	120	V
		BAV202	V_{RRM}	200	V
		BAV203	V_{RRM}	250	V
Reverse voltage		BAV200	V_R	50	V
		BAV201	V_R	100	V
		BAV202	V_R	150	V
		BAV203	V_R	200	V
Forward current			I_F	250	mA
Peak forward surge current	t_p=1s, T_j=25°C		I_{FSM}	1	A
Forward peak current	f=50Hz		I_{FM}	625	mA
Junction temperature			T_j	175	°C
Storage temperature range			T_{stg}	–65...+175	°C

Maximum Thermal Resistance

$T_j = 25°C$

Parameter	Test Conditions	Symbol	Value	Unit
Junction ambient	on PC board 50mmx50mmx1.6mm	R_{thJA}	500	K/W

Characteristics

$T_j = 25°C$

Parameter	Test Conditions	Type	Symbol	Min	Typ	Max	Unit
Forward voltage	I_F=100mA		V_F			1	V
Reverse current	V_R=50V	BAV200	I_R			100	nA
	V_R=100V	BAV201	I_R			100	nA
	V_R=150V	BAV202	I_R			100	nA
	V_R=200V	BAV203	I_R			100	nA
Reverse current	T_j=100°C, V_R= 50V	BAV200	I_R			15	µA
	T_j=100°C, V_R= 100V	BAV201	I_R			15	µA
	T_j=100°C, V_R= 150V	BAV202	I_R			15	µA
	T_j=100°C, V_R= 200V	BAV203	I_R			15	µA
Breakdown voltage	I_R=100µA, t_p/T=0.01, t_p=0.3ms	BAV200	$V_{(BR)}$	60			V
		BAV201	$V_{(BR)}$	120			V
		BAV202	$V_{(BR)}$	200			V
		BAV203	$V_{(BR)}$	250			V
Diode capacitance	V_R=0, f=1MHz		C_D		1.5		pF
Differential forward resistance	I_F=10mA		r_f		5		Ω
Reverse recovery time	I_F=I_R=30mA, i_R=3mA, R_L=100Ω		t_{rr}			50	ns

Typical Characteristics (T_j = 25°C unless otherwise specified)

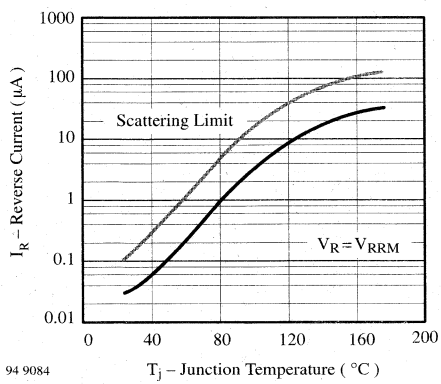

Figure 1. Reverse Current vs. Junction Temperature

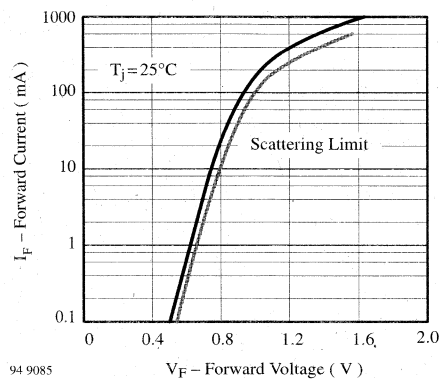

Figure 2. Forward Current vs. Forward Voltage

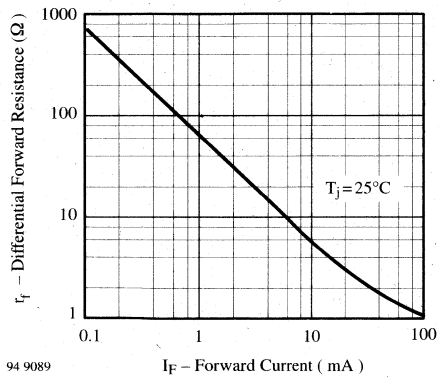

Figure 3. Differential Forward Resistance vs. Forward Current

Dimensions in mm

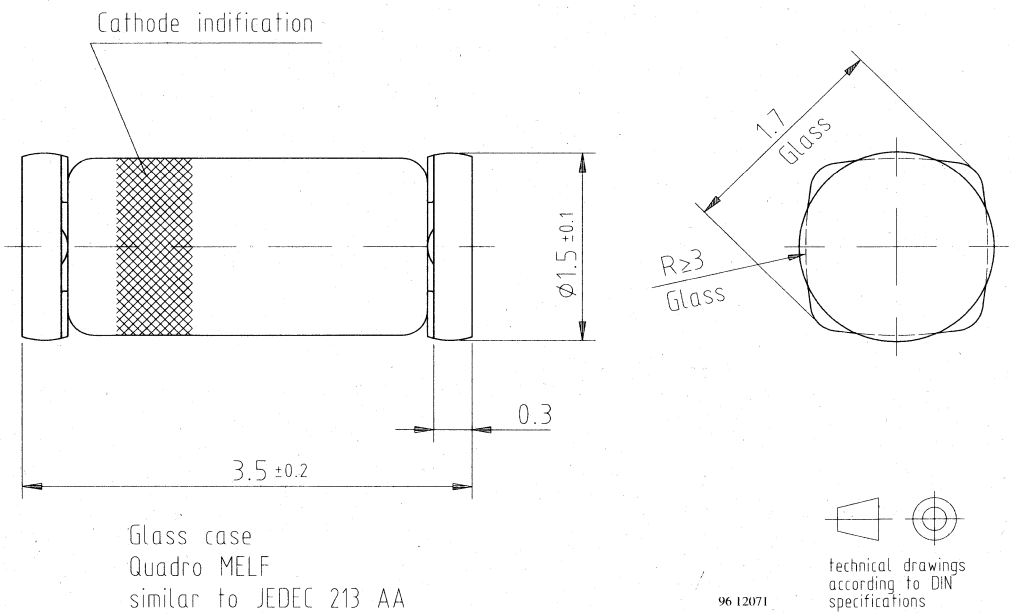

Silicon Epitaxial Planar Diodes

Features

- Saving space
- Hermetic sealed parts
- Fits onto SOD 323 / SOT 23 footprints
- Electrical data identical with the devices BAV100...BAV103 / BAV200...BAV203

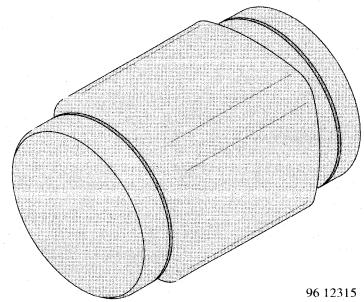

Applications

General purposes

Absolute Maximum Ratings

$T_j = 25°C$

Parameter	Test Conditions	Type	Symbol	Value	Unit
Peak reverse voltage		BAV300	V_{RRM}	60	V
		BAV301	V_{RRM}	120	V
		BAV302	V_{RRM}	200	V
		BAV303	V_{RRM}	250	V
Reverse voltage		BAV300	V_R	50	V
		BAV301	V_R	100	V
		BAV302	V_R	150	V
		BAV303	V_R	200	V
Forward current			I_F	250	mA
Peak forward surge current	t_p=1s, T_j=25°C		I_{FSM}	1	A
Forward peak current	f=50Hz		I_{FM}	625	mA
Junction temperature			T_j	175	°C
Storage temperature range			T_{stg}	–65...+175	°C

Maximum Thermal Resistance

$T_j = 25°C$

Parameter	Test Conditions	Symbol	Value	Unit
Junction ambient	mounted on epoxy–glass hard tissue, Fig. 1 35µm copper clad, 0.9 mm^2 copper area per electrode	R_{thJA}	500	K/W

Characteristics

$T_j = 25°C$

Parameter	Test Conditions	Type	Symbol	Min	Typ	Max	Unit
Forward voltage	I_F=100mA		V_F			1	V
Reverse current	V_R=50V	BAV300	I_R			100	nA
	V_R=100V	BAV301	I_R			100	nA
	V_R=150V	BAV302	I_R			100	nA
	V_R=200V	BAV303	I_R			100	nA
Reverse current	T_j=100°C, V_R= 50V	BAV300	I_R			15	µA
	T_j=100°C, V_R= 100V	BAV301	I_R			15	µA
	T_j=100°C, V_R= 150V	BAV302	I_R			15	µA
	T_j=100°C, V_R= 200V	BAV303	I_R			15	µA
Breakdown voltage	I_R=100µA, t_p/T=0.01, t_p=0.3ms	BAV300	$V_{(BR)}$	60			V
		BAV301	$V_{(BR)}$	120			V
		BAV302	$V_{(BR)}$	200			V
		BAV303	$V_{(BR)}$	250			V
Diode capacitance	V_R=0, f=1MHz		C_D		1.5		pF
Differential forward resistance	I_F=10mA		r_f		5		Ω
Reverse recovery time	I_F=I_R=30mA, i_R=3mA, R_L=100Ω		t_{rr}			50	ns

Typical Characteristics ($T_j = 25°C$ unless otherwise specified)

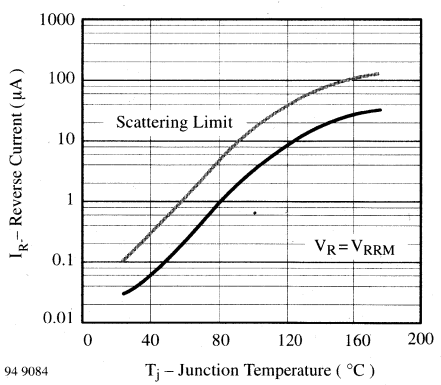

Figure 1. Reverse Current vs. Junction Temperature

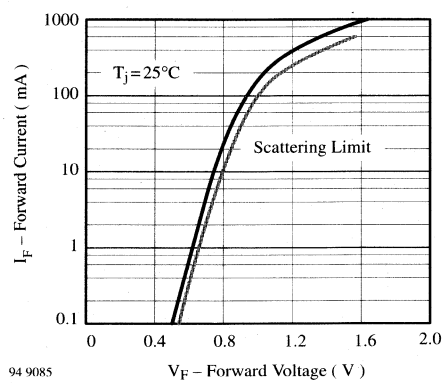

Figure 2. Forward Current vs. Forward Voltage

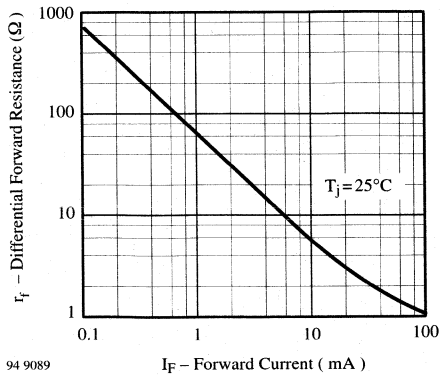

Figure 3. Differential Forward Resistance vs. Forward Current

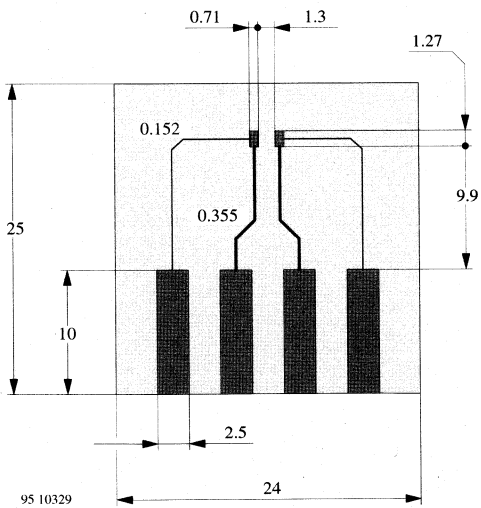

Figure 4. Board for R_{thJA} definition (in mm)

Reflow Soldering

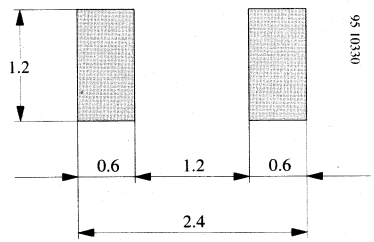

Figure 5. Recommended foot pads (in mm)

Wave Soldering

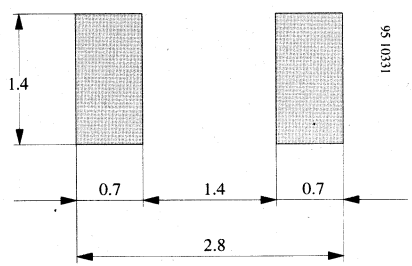

Figure 6. Recommended foot pads (in mm)

Dimensions in mm

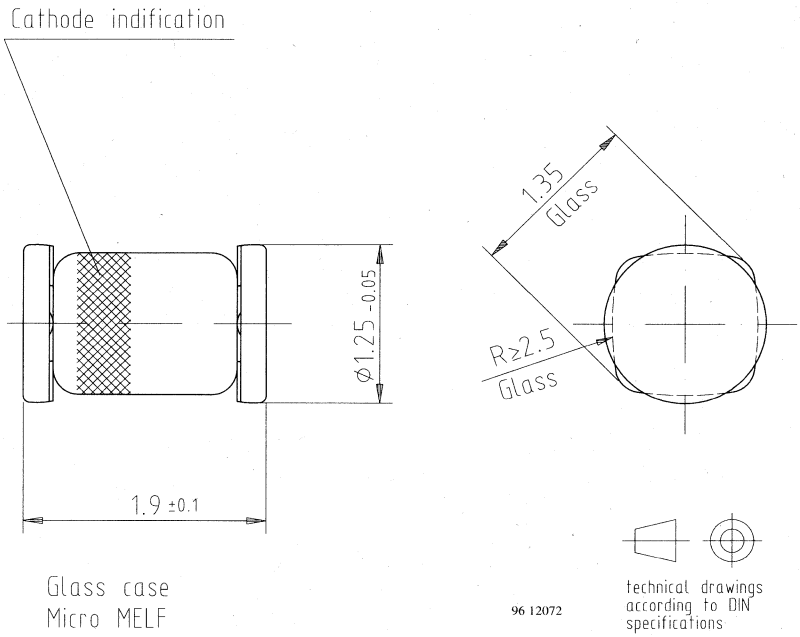

Silicon Epitaxial Planar Diode

Features

- Low forward voltage drop
- High forward current capability

Applications

High speed switch and general purpose use in computer and industrial applications

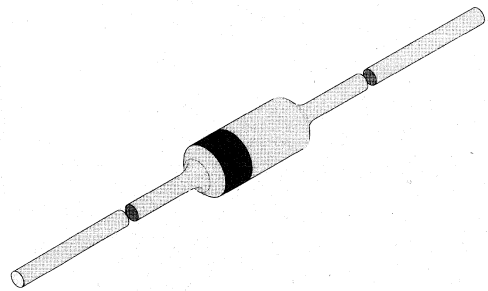

94 9367

Absolute Maximum Ratings

$T_j = 25°C$

Parameter	Test Conditions	Type	Symbol	Value	Unit
Repetitive peak reverse voltage			V_{RRM}	75	V
Reverse voltage			V_R	60	V
Peak forward surge current	t_p=1µs		I_{FSM}	4	A
Forward current			I_F	600	mA
Average forward current	V_R=0		I_{FAV}	300	mA
Power dissipation	l=4mm, T_L=45°C		P_V	440	mW
	l=4mm, $T_L \leqq 25°C$		P_V	500	mW
Junction temperature			T_j	200	°C
Storage temperature range			T_{stg}	–65...+200	°C

Maximum Thermal Resistance

$T_j = 25°C$

Parameter	Test Conditions	Symbol	Value	Unit
Junction ambient	l=4mm, T_L=constant	R_{thJA}	350	K/W

Characteristics

T_j = 25°C

Parameter	Test Conditions	Type	Symbol	Min	Typ	Max	Unit
Forward voltage	I_F=10mA		V_F		0.67	0.75	V
	I_F=50mA		V_F		0.8	0.85	V
	I_F=200mA		V_F		0.95	1.0	V
	I_F=400mA		V_F		1.12	1.25	V
Reverse current	V_R=60V		I_R			100	nA
	V_R=60V, T_j=100°C		I_R			50	µA
Breakdown voltage	I_R=5µA, t_p/T=0.01, t_p=0.3ms		$V_{(BR)}$	75			V
Diode capacitance	V_R=0, f=1MHz, V_{HF}=50mV		C_D			4	pF
Reverse recovery time	I_F=I_R=10...100mA, i_R=0.1xI_R		t_{rr}			6	ns

Dimensions in mm

technical drawings according to DIN specifications

94 9366

Standard Glass Case
54 A 2 DIN 41880
JEDEC DO 35
Weight max. 0.3 g

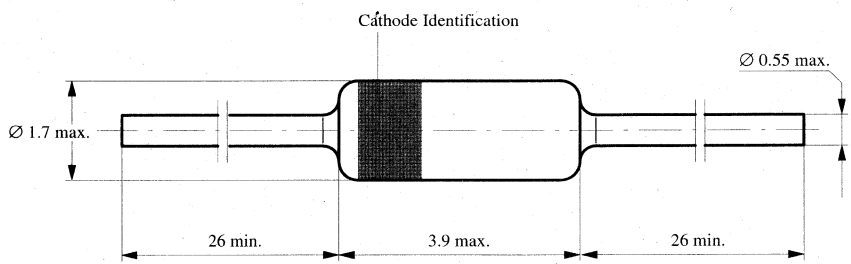

Silicon Planar Dual Diode

Features

- Common anode

Applications

Fast switches in thick and thin film circuits

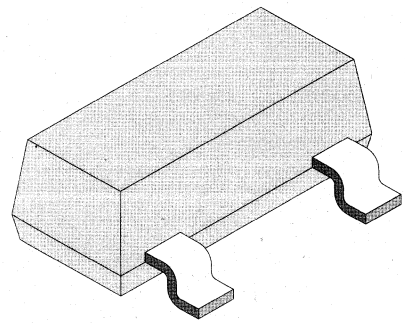

94 8550

Absolute Maximum Ratings

$T_j = 25°C$

Parameter	Test Conditions	Type	Symbol	Value	Unit
Reverse voltage			V_R	70	V
Peak forward surge current	t_p=1µs		I_{FSM}	4.5	A
Repetitive peak forward current			I_{FRM}	450	mA
Forward current	D1+D2		I_F	250	mA
Power dissipation			P_{tot}	300	mW
Junction temperature			T_j	150	°C
Storage temperature range			T_{stg}	–55...+150	°C

Maximum Thermal Resistance

$T_j = 25°C$

Parameter	Test Conditions	Symbol	Value	Unit
Junction ambient	on ceramic substrate 8mmx10mmx0.7mm	R_{thJA}	430	K/W

Characteristics

$T_j = 25°C$

Parameter	Test Conditions	Type	Symbol	Min	Typ	Max	Unit
Forward voltage	I_F=1mA		V_F			715	mV
	I_F=10mA		V_F			855	mV
	I_F=50mA		V_F			1	V
	I_F=150mA		V_F			1.25	V
Reverse current	V_R=70V		I_R			2.5	µA
	V_R=70V, T_j=150°C		I_R			50	µA
	V_R=25V, T_j=150°C		I_R			30	µA
Reverse recovery time	I_F=10mA, I_R=10mA, i_R=1mA		t_{rr}			6	ns
Diode capacitance	V_R=0, f=1MHz		C_D			1.5	pF

Dimensions in mm

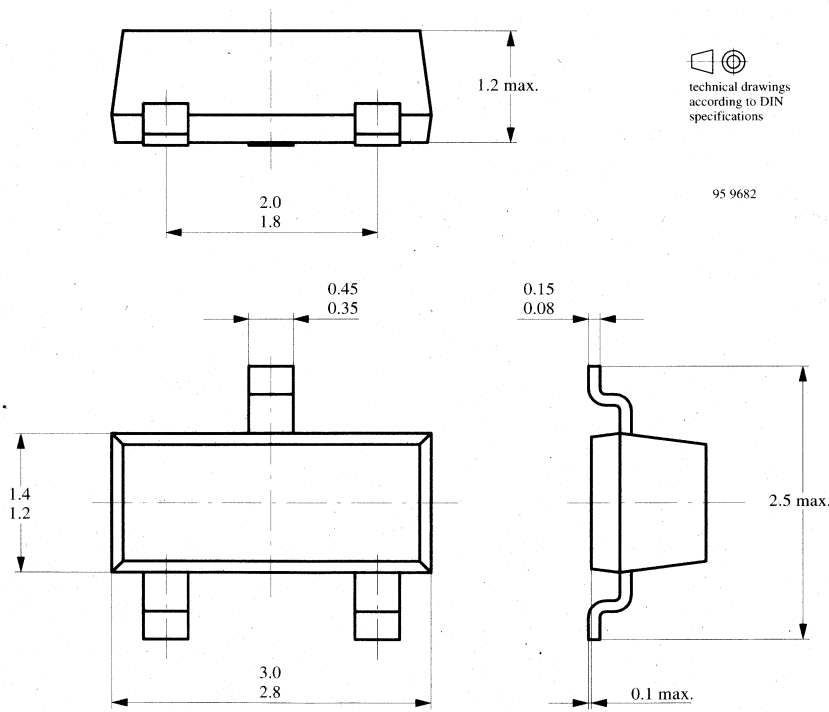

technical drawings according to DIN specifications

95 9682

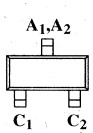

Standard Plastic Case
23 A 3 DIN 41869/8
JEDEC TO 236
SOT 23

94 9542

Silicon Epitaxial Planar Diode

Applications

Extreme fast switches

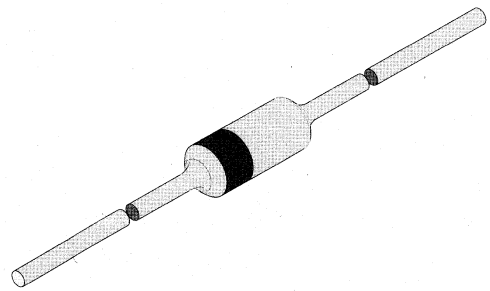

94 9367

Absolute Maximum Ratings

$T_j = 25°C$

Parameter	Test Conditions	Type	Symbol	Value	Unit
Repetitive peak reverse voltage			V_{RRM}	35	V
Reverse voltage			V_R	25	V
Peak forward surge current	t_p=1µs		I_{FSM}	2000	mA
Repetitive peak forward current			I_{FRM}	450	mA
Forward current			I_F	300	mA
Average forward current	V_R=0		I_{FAV}	150	mA
Power dissipation	l=4mm, T_L=45°C		P_V	440	mW
	l=4mm, $T_L \leqq 25°C$		P_V	500	mW
Junction temperature			T_j	200	°C
Storage temperature range			T_{stg}	–65...+200	°C

Maximum Thermal Resistance

$T_j = 25°C$

Parameter	Test Conditions	Symbol	Value	Unit
Junction ambient	l=4mm, T_L=constant	R_{thJA}	350	K/W

Characteristics

$T_j = 25°C$

Parameter	Test Conditions	Type	Symbol	Min	Typ	Max	Unit
Forward voltage	I_F=30mA		V_F			1	V
Reverse current	V_R=25V		I_R			100	nA
	V_R=25V, T_j=150°C		I_R			100	µA
Breakdown voltage	I_R=5µA, t_p/T=0.01, t_p=0.3ms		$V_{(BR)}$	35			V
Diode capacitance	V_R=0, f=1MHz, V_{HF}=50mV		C_D			4	pF
Reverse recovery time	I_F=I_R=10mA, i_R=1mA		t_{rr}			4	ns
	I_F=10mA, V_R=6V, i_R=1mA, R_L=100Ω		t_{rr}			2	ns

Dimensions in mm

technical drawings according to DIN specifications

94 9366

Standard Glass Case
54 A 2 DIN 41880
JEDEC DO 35
Weight max. 0.3 g

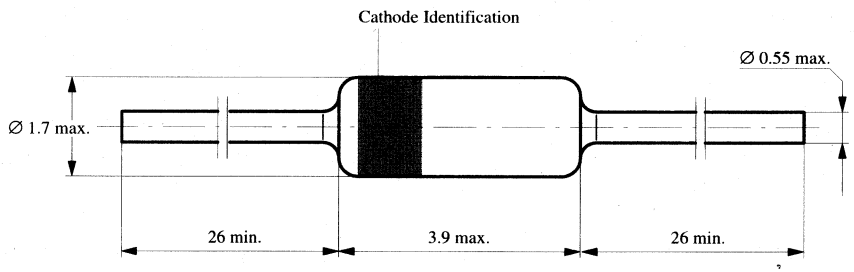

Silicon Epitaxial Planar Diode

Applications

Extreme fast switches

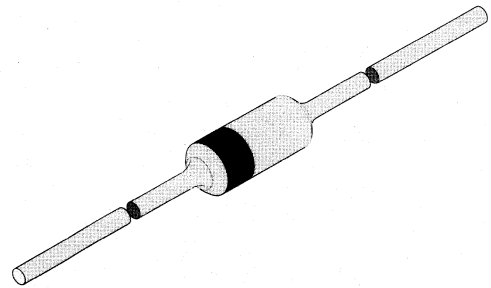

94 9367

Absolute Maximum Ratings

$T_j = 25°C$

Parameter	Test Conditions	Type	Symbol	Value	Unit
Repetitive peak reverse voltage			V_{RRM}	75	V
Reverse voltage			V_R	50	V
Peak forward surge current	t_p=1µs		I_{FSM}	2000	mA
Repetitive peak forward current			I_{FRM}	450	mA
Forward current			I_F	300	mA
Average forward current	V_R=0		I_{FAV}	150	mA
Power dissipation	l=4mm, T_L=45°C		P_V	440	mW
	l=4mm, $T_L \leqq 25°C$		P_V	500	mW
Junction temperature			T_j	200	°C
Storage temperature range			T_{stg}	–65...+200	°C

Maximum Thermal Resistance

$T_j = 25°C$

Parameter	Test Conditions	Symbol	Value	Unit
Junction ambient	l=4mm, T_L=constant	R_{thJA}	350	K/W

Characteristics

T_j = 25°C

Parameter	Test Conditions	Type	Symbol	Min	Typ	Max	Unit
Forward voltage	I_F=100mA		V_F			1	V
Reverse current	V_R=50V		I_R			100	nA
	V_R=50V, T_j=150°C		I_R			100	µA
Breakdown voltage	I_R=5µA, t_p/T=0.01, t_p=0.3ms		$V_{(BR)}$	75			V
Diode capacitance	V_R=0, f=1MHz, V_{HF}=50mV		C_D		1.7	2	pF
Reverse recovery time	I_F=I_R=10mA, i_R=1mA		t_{rr}			4	ns
	I_F=10mA, V_R=6V, i_R=1mA, R_L=100Ω		t_{rr}			2	ns

Dimensions in mm

technical drawings
according to DIN
specifications

94 9366

Standard Glass Case
54 A 2 DIN 41880
JEDEC DO 35
Weight max. 0.3 g

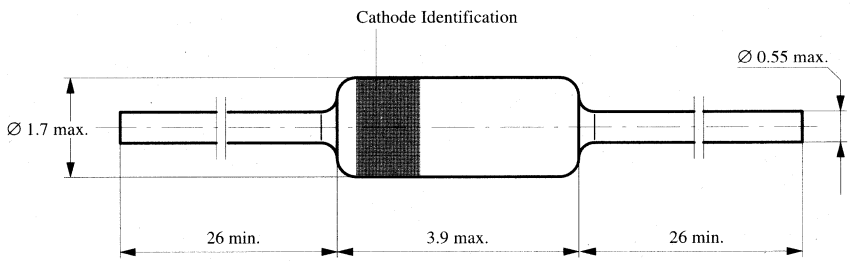

Silicon Epitaxial Planar Diode

Applications

General purpose

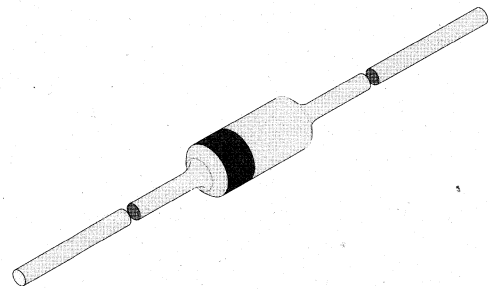

94 9367

Absolute Maximum Ratings

$T_j = 25°C$

Parameter	Test Conditions	Type	Symbol	Value	Unit
Repetitive peak reverse voltage			V_{RRM}	150	V
Reverse voltage			V_R	120	V
Peak forward surge current	t_p=1µs		I_{FSM}	1	A
Repetitive peak forward current			I_{FRM}	625	mA
Forward current			I_F	250	mA
Average forward current			I_{FAV}	200	mA
Junction temperature			T_j	175	°C
Storage temperature range			T_{stg}	–65...+200	°C

Maximum Thermal Resistance

$T_j = 25°C$

Parameter	Test Conditions	Symbol	Value	Unit
Junction ambient	l=4mm, T_L=constant	R_{thJA}	350	K/W

Characteristics

$T_j = 25°C$

Parameter	Test Conditions	Type	Symbol	Min	Typ	Max	Unit
Forward voltage	I_F=0.1mA		V_F	0.4		0.52	V
	I_F=10 mA		V_F	0.63		0.78	V
	I_F=50 mA		V_F	0.73		0.92	V
	I_F=100mA		V_F	0.78		1	V
	I_F=150mA		V_F			1.07	V
Reverse current	V_R=120V		I_R			100	nA
	V_R=120 V, T_j=150°C		I_R			100	µA
Breakdown voltage	I_R=100µA, t_p/T=0.01, t_p=0.3ms		$V_{(BR)}$	150			V
Diode capacitance	V_R=0, f=1MHz		C_D		1.5	5	pF
Differential forward resistance	I_F=10mA		r_f		5		Ω
Reverse recovery time	I_F=I_R=30mA, i_R=3mA, R_L=100Ω		t_{rr}			50	ns

Typical Characteristics ($T_j = 25°C$ unless otherwise specified)

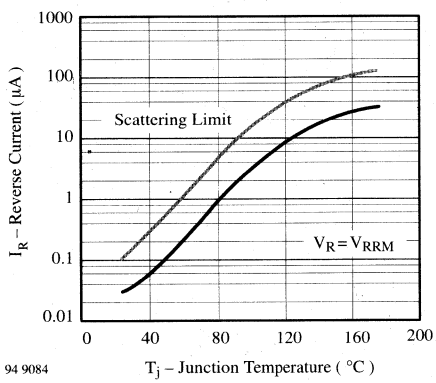

Figure 1. Reverse Current vs. Junction Temperature

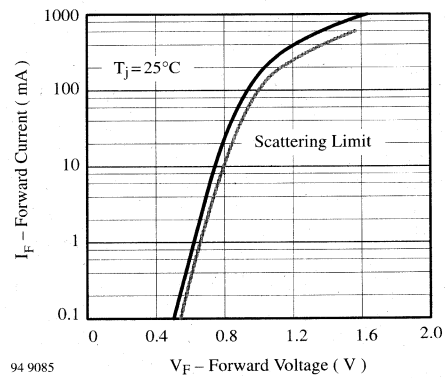

Figure 2. Forward Current vs. Forward Voltage

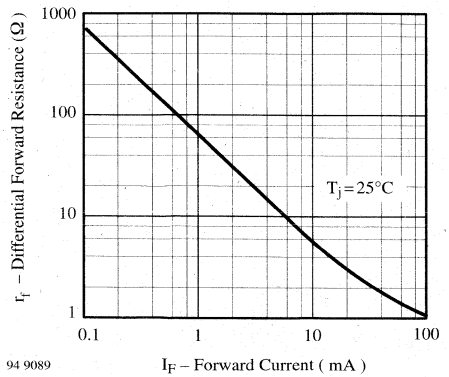

Figure 3. Differential Forward Resistance vs. Forward Current

Dimensions in mm

technical drawings
according to DIN
specifications

94 9366

Standard Glass Case
54 A 2 DIN 41880
JEDEC DO 35
Weight max. 0.3 g

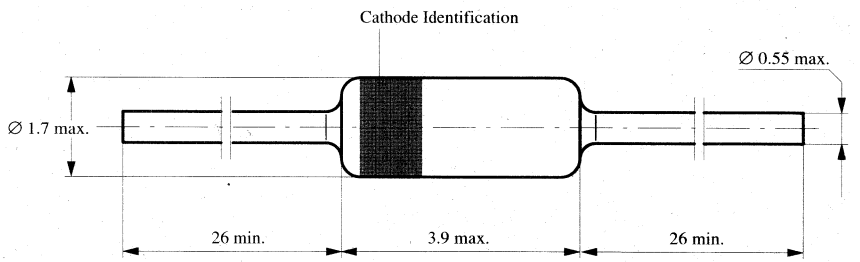

Silicon Planar Diode

Features

- Very low reverse current

Applications

Protection circuits, delay circuits

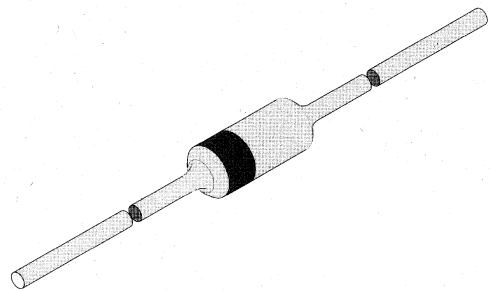

94 9367

Absolute Maximum Ratings

$T_j = 25°C$

Parameter	Test Conditions	Type	Symbol	Value	Unit
Peak reverse voltage, non repetitive			V_{RSM}	140	V
Repetitive peak reverse voltage			V_{RRM}	140	V
Reverse voltage			V_R	125	V
Peak forward surge current	t_p=1µs		I_{FSM}	2	A
Average forward current	f=50Hz		I_{FAV}	200	mA
Junction temperature			T_j	200	°C
Storage temperature range			T_{stg}	–65...+200	°C

Maximum Thermal Resistance

$T_j = 25°C$

Parameter	Test Conditions	Symbol	Value	Unit
Junction ambient	l=4mm, T_L=constant	R_{thJA}	350	K/W

Characteristics

$T_j = 25°C$

Parameter	Test Conditions	Type	Symbol	Min	Typ	Max	Unit
Forward voltage	I_F=100mA		V_F			1	V
Reverse current	E ≦ 300lx, V_R		I_R			3	nA
	E ≦ 300lx, V_R, T_j=125°C		I_R			0.5	µA
	E ≦ 300lx, V_R=60V		I_R			1	nA
Breakdown voltage	I_R=5µA, t_p/T=0.01, t_p=0.3ms		$V_{(BR)}$	140			V
Diode capacitance	V_R=0, f=1MHz		C_D			5	pF

Typical Characteristics (T_j = 25°C unless otherwise specified)

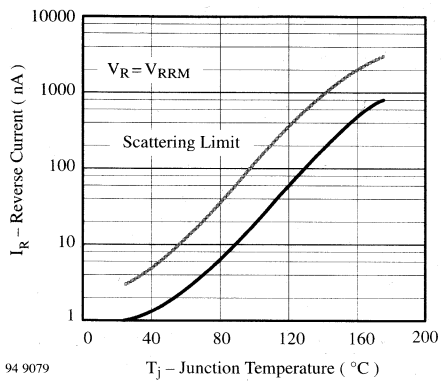

Figure 1. Reverse Current vs. Junction Temperature

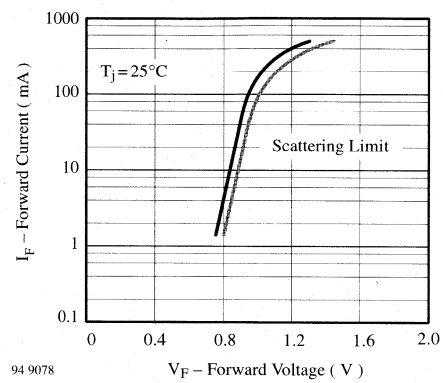

Figure 2. Forward Current vs. Forward Voltage

Dimensions in mm

technical drawings according to DIN specifications

94 9366

Standard Glass Case
54 A 2 DIN 41880
JEDEC DO 35
Weight max. 0.3 g

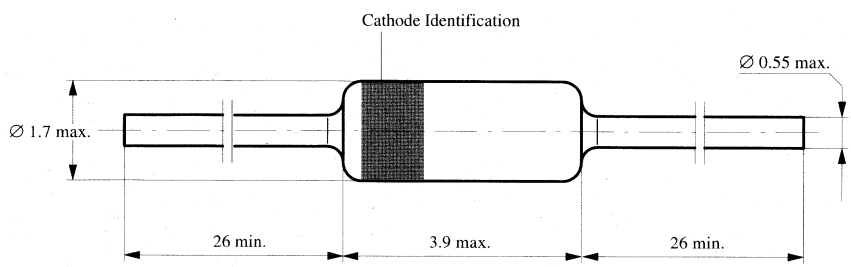

Silicon Epitaxial Planar Dual Capacitance Diode

Features

- Common cathode

Applications

Tuning of separate resonant circuits, push–pull circuits in FM range, especially for car radios

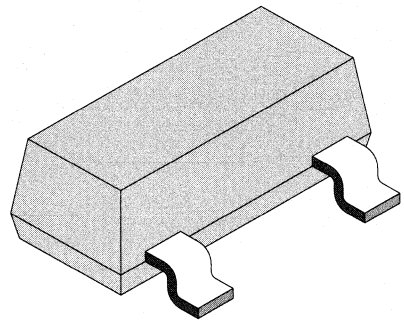

94 8550

Absolute Maximum Ratings

$T_j = 25°C$

Parameter	Test Conditions	Type	Symbol	Value	Unit
Repetitive peak reverse voltage			V_{RRM}	20	V
Reverse voltage			V_R	18	V
Forward current			I_F	50	mA
Junction temperature			T_j	100	°C
Storage temperature range			T_{stg}	–55...+150	°C

Characteristics

$T_j = 25°C$

Parameter	Test Conditions	Type	Symbol	Min	Typ	Max	Unit
Reverse current	V_R=16V		I_R			20	nA
	V_R=16V, T_j=60°C		I_R			0.2	µA
Diode capacitance [1])	V_R=2V, f=1MHz		C_D	42		47.5	pF
	V_R=2V, f=1MHz	Group 0	C_D	42		43.5	pF
	V_R=2V, f=1MHz	Group 1	C_D	43		44.5	pF
	V_R=2V, f=1MHz	Group 2	C_D	44		45.5	pF
	V_R=2V, f=1MHz	Group 3	C_D	45		46.5	pF
	V_R=2V, f=1MHz	Group 4	C_D	46		47.5	pF
Capacitance ratio	V_R=2V,8V, f=100MHz		C_{D2}/ C_{D8}	1.65		1.75	
Series resistance	C_D=38pF, f=100MHz		r_s		0.3	0.4	Ω
Figure of merit	C_D=38pF, f=100MHz		Q	100	140		

[1]) A packing unit (reel) contains diodes from one capacitance group only. Delivery of single capacitance groups available only on request.

Dimensions in mm

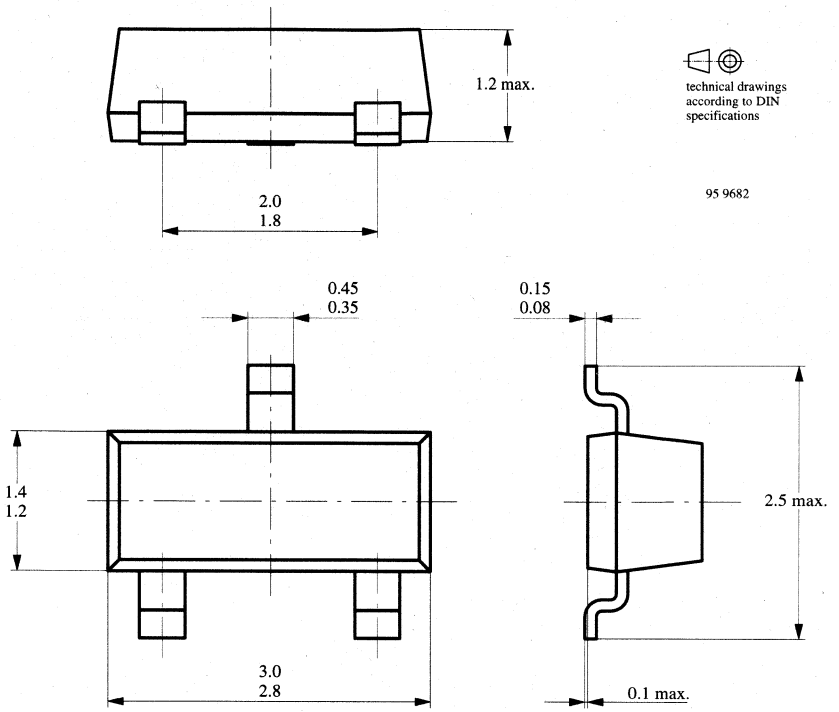

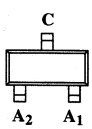

Standard Plastic Case
23 A 3 DIN 41869/8
JEDEC TO 236
SOT 23

94 9540

Silicon Epitaxial Planar Dual Capacitance Diode

Features

- Common cathode

Applications

Tuning of separate resonant circuits, push–pull circuits in FM range, especially for car radios

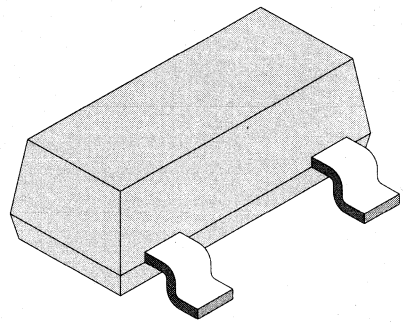

94 8550

Absolute Maximum Ratings

T_j = 25°C

Parameter	Test Conditions	Type	Symbol	Value	Unit
Repetitive peak reverse voltage			V_{RRM}	20	V
Reverse voltage			V_R	18	V
Forward current			I_F	50	mA
Junction temperature			T_j	125	°C
Storage temperature range			T_{stg}	–55...+150	°C

Characteristics

T_j = 25°C

Parameter	Test Conditions	Type	Symbol	Min	Typ	Max	Unit
Reverse current	V_R=16V		I_R			20	nA
	V_R=16V, T_j=60°C		I_R			200	nA
Diode capacitance [1])	V_R=2V	Group 1	C_D	43		45	pF
		Group 2	C_D	44.5		46.5	pF
	V_R=8V	Group 1	C_D	19.1		21.95	pF
		Group 2	C_D	19.75		22.70	pF
Capacitance ratio	V_R=2V,8V, f=1MHz		C_{D2}/ C_{D8}	2.05		2.25	
Series resistance	C_D=38pF, f=100MHz		r_s			0.5	Ω

[1]) In the reverse voltage range of V_R=2...8V for 4 diodes taped in sequence the max. deviation is 3%.

Dimensions in mm

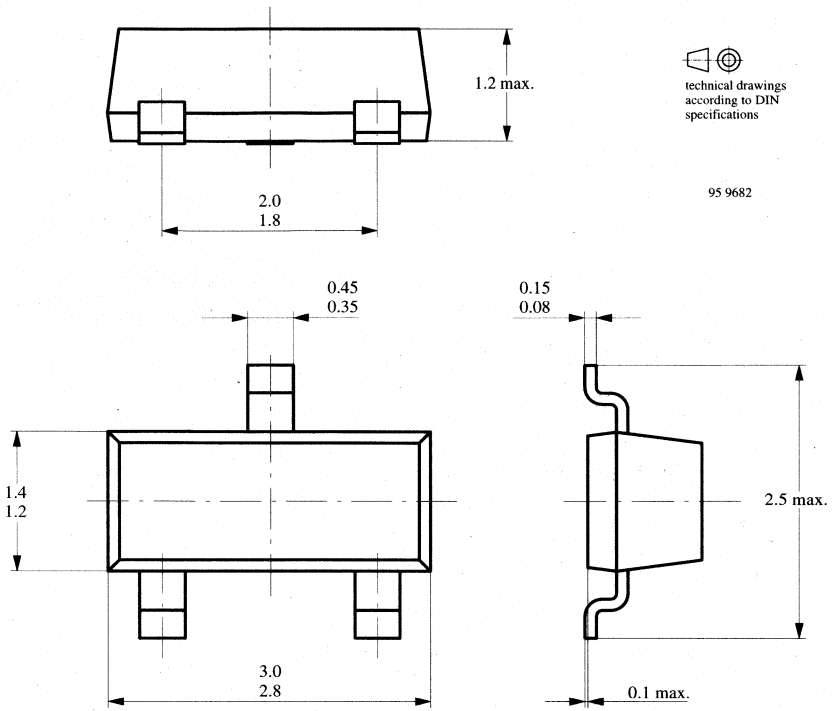

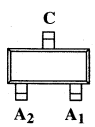

Standard Plastic Case
23 A 3 DIN 41869/8
JEDEC TO 236
SOT 23

94 9540

Silicon Epitaxial Planar Dual Capacitance Diode

Features

- Common cathode
- High capacitance ratio

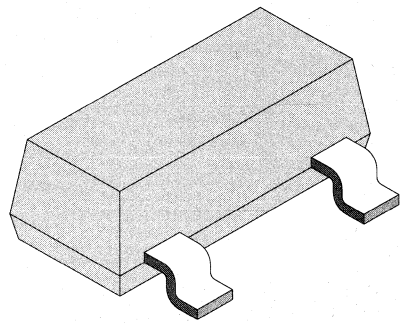

94 8550

Applications

Tuning of separate resonant circuits, push–pull circuits in FM range, for car radios

Absolute Maximum Ratings

$T_j = 25°C$

Parameter	Test Conditions	Type	Symbol	Value	Unit
Repetitive peak reverse voltage			V_{RRM}	20	V
Reverse voltage			V_R	18	V
Forward current			I_F	50	mA
Junction temperature			T_j	125	°C
Storage temperature range			T_{stg}	–55...+150	°C

Characteristics

$T_j = 25°C$

Parameter	Test Conditions	Type	Symbol	Min	Typ	Max	Unit
Reverse current	V_R=16V		I_R			20	nA
	V_R=16V, T_j=60°C		I_R			200	nA
Diode capacitance [1])	V_R=2V	Group 2	C_D	42.5		43.8	pF
		Group 3	C_D	43.7		45	pF
	V_R=8V	Group 2	C_D	17.5		19.2	pF
		Group 3	C_D	18.0		19.8	pF
Capacitance ratio	V_R=2V,8V, f=1MHz		C_{D2}/ C_{D8}	2.25		2.45	
Series resistance	V_R=2V, f=100MHz		r_s			0.5	Ω

[1]) In the reverse voltage range of V_R=2...8V for 4 diodes taped in sequence the max. deviation is 3%.

Dimensions in mm

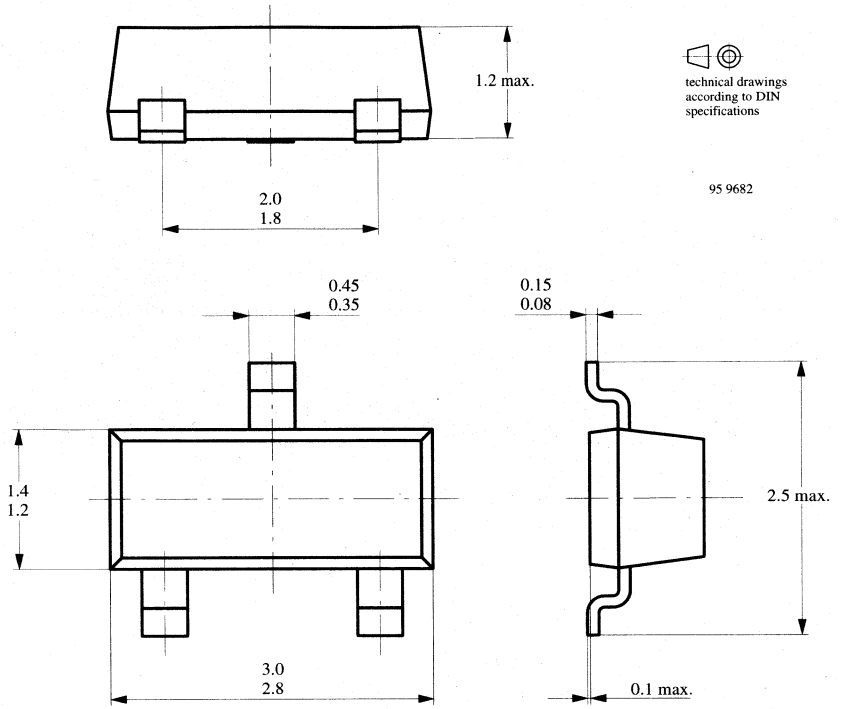

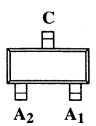

Standard Plastic Case
23 A 3 DIN 41869/8
JEDEC TO 236
SOT 23

94 9540

Silicon Mesa Rectifiers

Features

- Glass passivated junction
- Hermetically sealed package

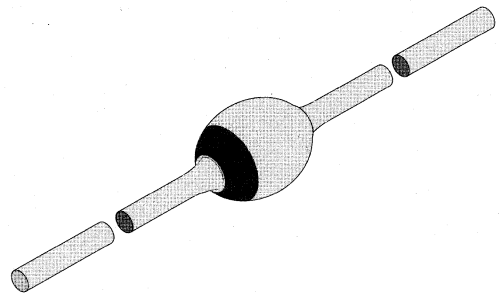

94 9539

Applications

Fast rectifier and switch for TV–line output circuits and switch mode power supply

Absolute Maximum Ratings

$T_j = 25°C$

Parameter	Test Conditions	Type	Symbol	Value	Unit
Reverse voltage, crest working reverse voltage		BY203/12S	V_{RWM}	1200	V
		BY203/16S	V_{RWM}	1600	V
		BY203/20S	V_{RWM}	2000	V
Average forward current			I_{FAV}	250	mA
Peak forward surge current	t_p=0.1ms		I_{FSM}	20	A
Junction temperature			T_j	150	°C
Storage temperature range			T_{stg}	–55...+150	°C

Maximum Thermal Resistance

$T_j = 25°C$

Parameter	Test Conditions	Symbol	Value	Unit
Junction ambient	l=5mm, T_L=constant	R_{thJA}	50	K/W
	maximum lead length	R_{thJA}	100	K/W

Characteristics

$T_j = 25°C$

Parameter	Test Conditions	Type	Symbol	Min	Typ	Max	Unit
Forward voltage	I_F=200mA, t_p/T=0.01, t_p=0.3ms		V_F			2.4	V
Reverse current	V_R=700V	BY203/12S	I_R			2	µA
	V_R1000V	BY203/16S	I_R			2	µA
	V_R1200V	BY203/20S	I_R			2	µA
Breakdown voltage	I_R=100µA, t_p/T=0.01, t_p=0.3ms	BY203/12S	$V_{(BR)}$	1200			V
		BY203/16S	$V_{(BR)}$	1600			V
		BY203/20S	$V_{(BR)}$	2000			V
Reverse recovery time	I_F=0.5A, I_R=1A, i_R=0.25A		t_{rr}			300	ns

Typical Characteristics (T_j = 25°C unless otherwise specified)

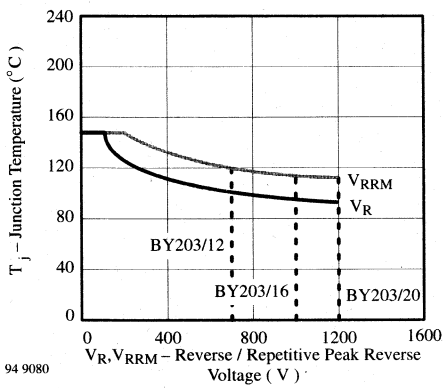

Figure 1. Junction Temperature vs. Reverse/Repetitive Peak Reverse Voltage

Dimensions in mm

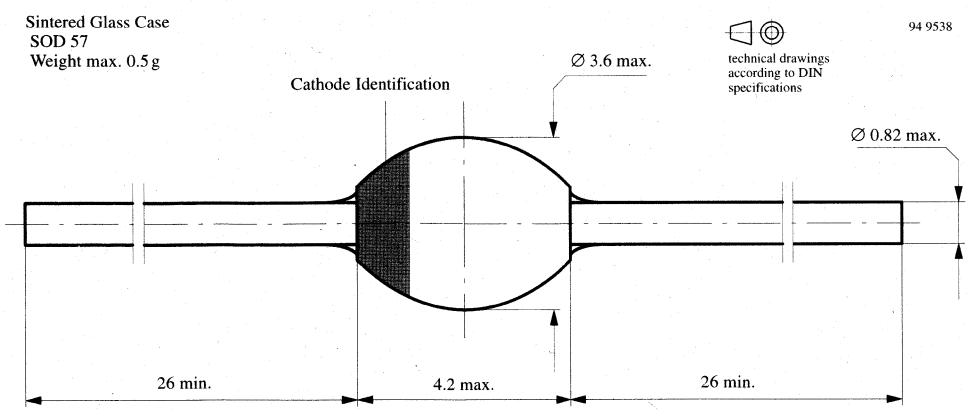

Silicon Mesa Rectifier

Features

- Glass passivated junction
- Hermetically sealed package

Applications

High voltage rectifier
Efficiency diode in horizontal deflection circuits

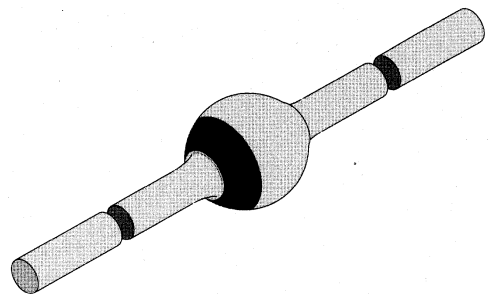

94 9588

Absolute Maximum Ratings

$T_j = 25°C$

Parameter	Test Conditions	Type	Symbol	Value	Unit
Reverse voltage, repetitive peak reverse voltage			V_R, V_{RWM}	1500	V
Peak forward surge current	t_p=10ms		I_{FSM}	50	A
Average forward current			I_{FAV}	3	A
Junction temperature			T_j	140	°C
Storage temperature range			T_{stg}	–55...+150	°C

Maximum Thermal Resistance

$T_j = 25°C$

Parameter	Test Conditions	Symbol	Value	Unit
Junction ambient	on PC board with spacing 37.5mm	R_{thJA}	70	K/W

Characteristics

$T_j = 25°C$

Parameter	Test Conditions	Type	Symbol	Min	Typ	Max	Unit
Forward voltage	I_F=5A		V_F			1.5	V
Reverse current	V_R=1500V		I_R		2	5	µA
	V_R=1500V, T_j=140°C		I_R			140	µA
Total reverse recovery time	I_F=1A, $-di_F/dt$=0.05A/µs		t_{rr}			20	µs

Typical Characteristics (T_j = 25°C unless otherwise specified)

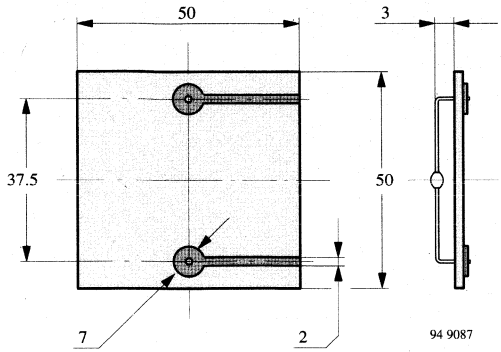

Figure 1. Epoxy glass hard tissue, board thickness 1.5 mm, $R_{thJA} \leqq 70$ K/W

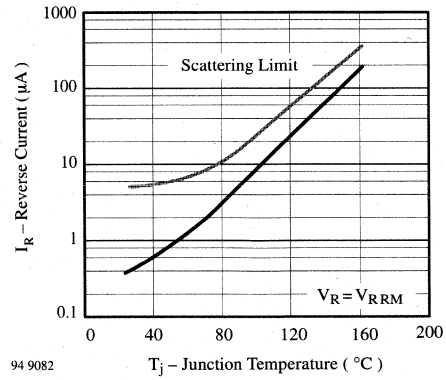

Figure 3. Reverse Current vs. Junction Temperature

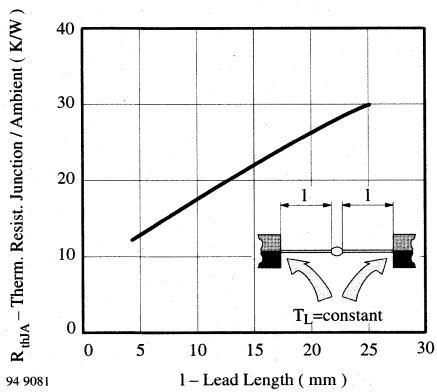

Figure 2. Thermal Resistance vs. Lead Length

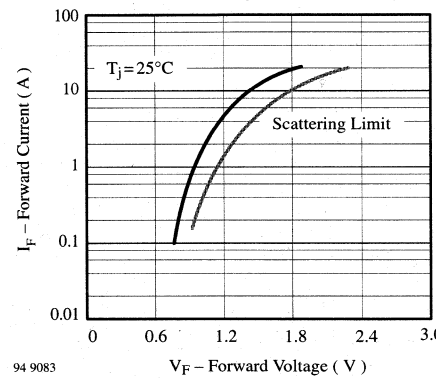

Figure 4. Forward Current vs. Forward Voltage

Dimensions in mm

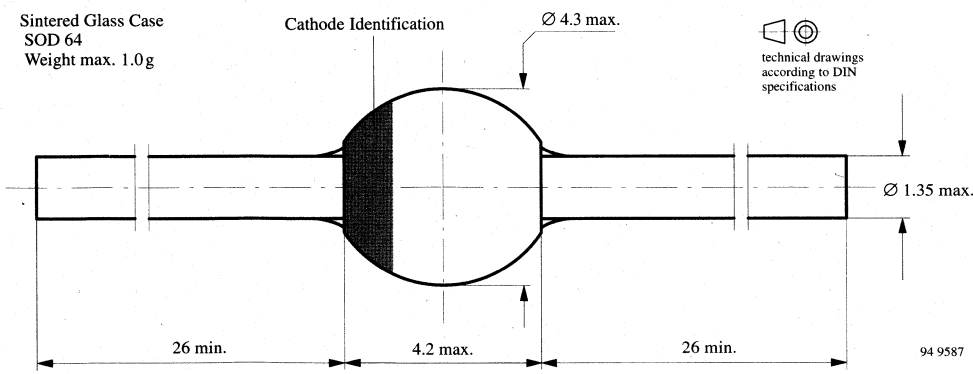

Silicon Mesa Rectifiers

Features

- Glass passivated junction
- Hermetically sealed package

Applications

High voltage rectifier
Efficiency diode in horizontal deflection circuits

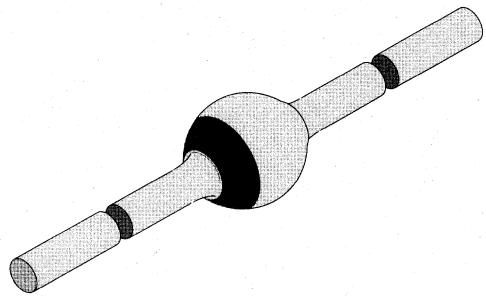

94 9588

Absolute Maximum Ratings

$T_j = 25°C$

Parameter	Test Conditions	Type	Symbol	Value	Unit
Peak reverse voltage, non repetitive		BY228/13	V_{RSM}	1300	V
		BY228/15	V_{RSM}	1500	V
Reverse voltage		BY228/13	V_R	1000	V
		BY228/15	V_R	1200	V
Peak forward surge current	t_p=10ms		I_{FSM}	50	A
Average forward current			I_{FAV}	3	A
Junction temperature			T_j	140	°C
Storage temperature range			T_{stg}	–55...+150	°C

Maximum Thermal Resistance

$T_j = 25°C$

Parameter	Test Conditions	Symbol	Value	Unit
Junction ambient	on PC board with spacing 37.5mm	R_{thJA}	70	K/W

Characteristics

$T_j = 25°C$

Parameter	Test Conditions	Type	Symbol	Min	Typ	Max	Unit
Forward voltage	I_F=5A		V_F			1.5	V
Reverse current	V_R=1000V	BY228/13	I_R		2	5	µA
	V_R=1200V	BY228/15	I_R		2	5	µA
	V_R=1000V, T_j=140°C	BY228/13	I_R			140	µA
	V_R=1200V, T_j=140°C	BY228/15	I_R			140	µA
Total reverse recovery time	I_F=1A, $-di_F/dt$=0.05A/µs		t_{rr}			20	µs

Typical Characteristics (T_j = 25°C unless otherwise specified)

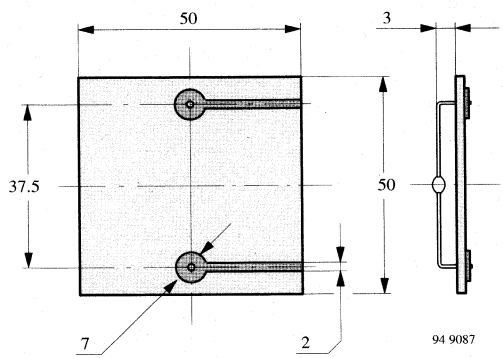

Figure 1. Epoxy glass hard tissue, board thickness 1.5 mm, $R_{thJA} \leqq 70$ K/W

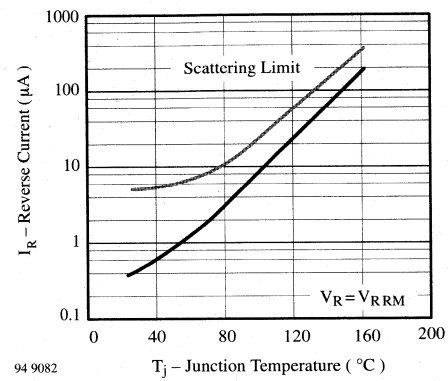

Figure 3. Reverse Current vs. Junction Temperature

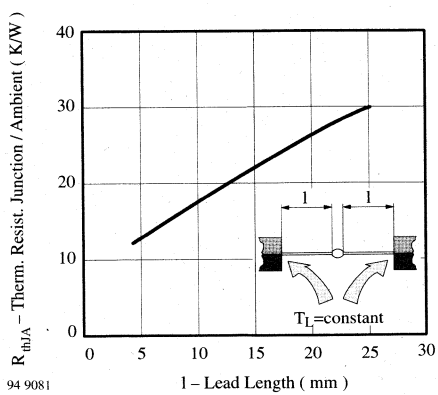

Figure 2. Thermal Resistance vs. Lead Length

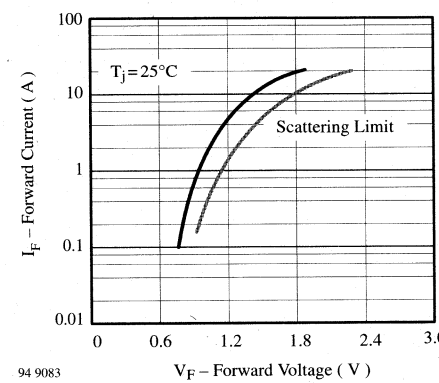

Figure 4. Forward Current vs. Forward Voltage

Dimensions in mm

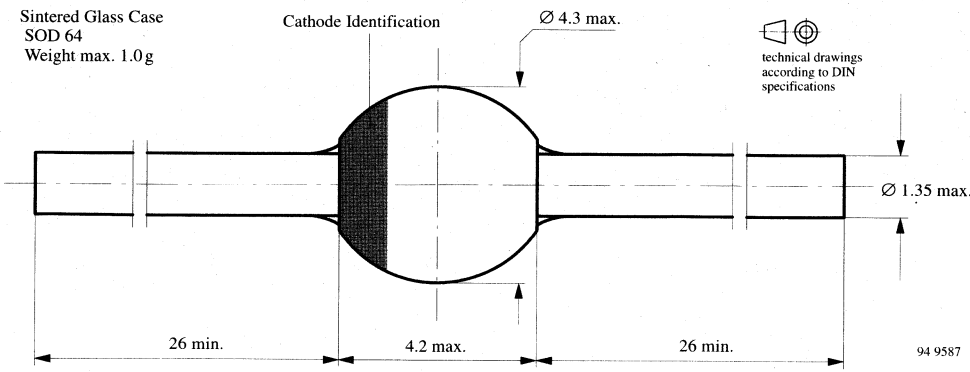

Silicon Mesa Rectifiers

Features

- Glass passivated junction
- Hermetically sealed package

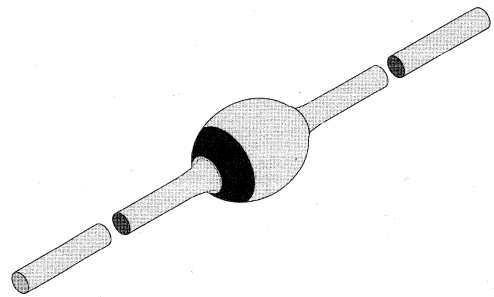

94 9539

Applications

High voltage fast rectifier

Absolute Maximum Ratings

$T_j = 25°C$

Parameter	Test Conditions	Type	Symbol	Value	Unit
Peak reverse voltage, non repetitive		BY268	V_{RSM}	1600	V
		BY269	V_{RSM}	1800	V
Reverse voltage		BY268	V_R	1400	V
		BY269	V_R	1600	V
Peak forward surge current	t_p=10ms		I_{FSM}	20	A
Average forward current			I_{FAV}	0.8	A
Junction temperature			T_j	175	°C
Storage temperature range			T_{stg}	–65...+175	°C

Maximum Thermal Resistance

$T_j = 25°C$

Parameter	Test Conditions	Symbol	Value	Unit
Junction ambient	on PC board with spacing 25mm	R_{thJA}	110	K/W

Characteristics

$T_j = 25°C$

Parameter	Test Conditions	Type	Symbol	Min	Typ	Max	Unit
Forward voltage	I_F=0.4A		V_F			1.25	V
Reverse current	V_R=1400V	BY268	I_R		1	2	µA
	V_R=1600V	BY269	I_R		1	2	µA
	V_R=1400V, T_j=100°C	BY268	I_R			15	µA
	V_R=1600V, T_j=100°C	BY269	I_R			15	µA
Reverse recovery time	I_F=0.5A, I_R=1A, i_R=0.25A		t_{rr}			400	ns

Typical Characteristics (T_j = 25°C unless otherwise specified)

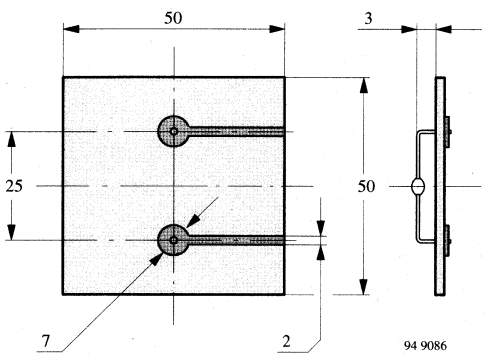

Figure 1. Epoxy glass hard tissue, board thickness 1.5 mm, $R_{thJA} \leqq 100$ K/W

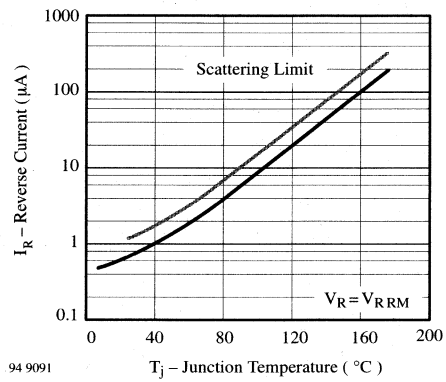

Figure 3. Reverse Current vs. Junction Temperature

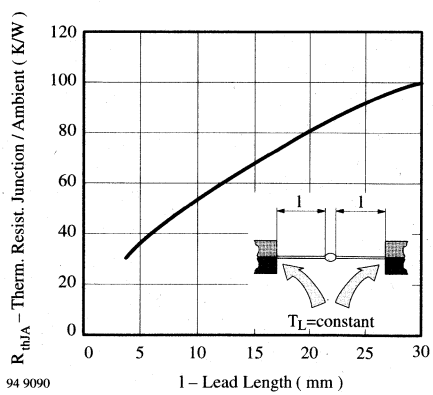

Figure 2. Thermal Resistance vs. Lead Length

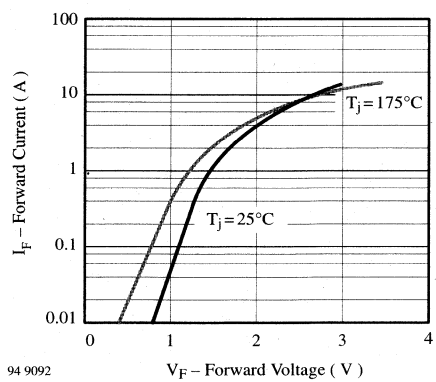

Figure 4. Forward Current vs. Forward Voltage

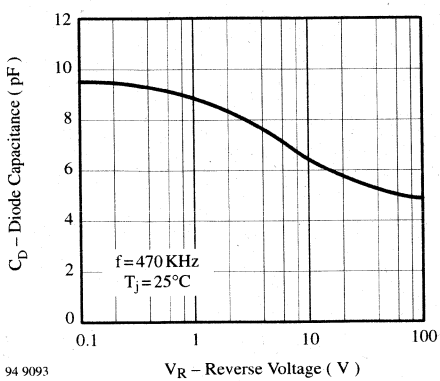

Figure 5. Diode Capacitance vs. Reverse Voltage

Dimensions in mm

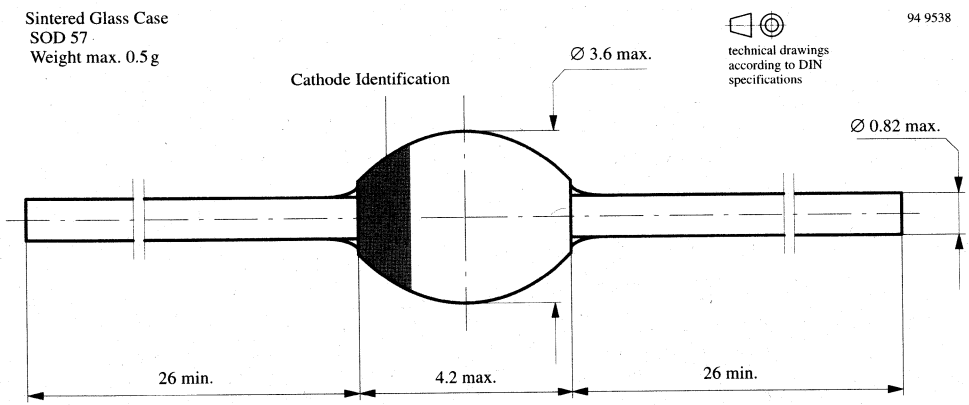

Silicon Mesa Rectifiers

Features

- Glass passivated junction
- Hermetically sealed package

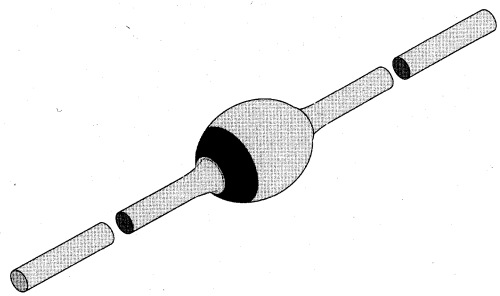

94 9539

Applications

High voltage rectifier
Efficiency diode in horizontal deflection circuits

Absolute Maximum Ratings

$T_j = 25°C$

Parameter	Test Conditions	Type	Symbol	Value	Unit
Reverse voltage		BY448	V_R	1500	V
		BY458	V_R	1200	V
Peak forward surge current	t_p=10ms		I_{FSM}	30	A
Average forward current			I_{FAV}	2	A
Junction temperature			T_j	140	°C
Storage temperature range			T_{stg}	–55...+150	°C

Maximum Thermal Resistance

$T_j = 25°C$

Parameter	Test Conditions	Symbol	Value	Unit
Junction ambient	on PC board with spacing 25mm	R_{thJA}	100	K/W

Characteristics

$T_j = 25°C$

Parameter	Test Conditions	Type	Symbol	Min	Typ	Max	Unit
Forward voltage	I_F=3A		V_F			1.6	V
Reverse current	V_R=V_{RSM}		I_R			3	µA
	V_R=V_{RSM}, T_j=140°C		I_R			140	µA
Total reverse recovery time	I_F=1A, $-d_{iF}/d_t$=0.05A/µs		t_{rr}			20	µs

Typical Characteristics (T_j = 25°C unless otherwise specified)

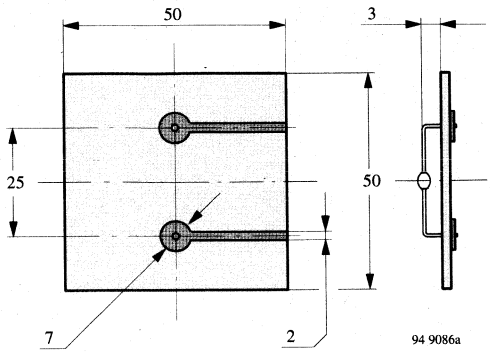

Figure 1. Epoxy glass hard tissue, board thickness 1.5 mm, $R_{thJA} \leqq 100$ K/W

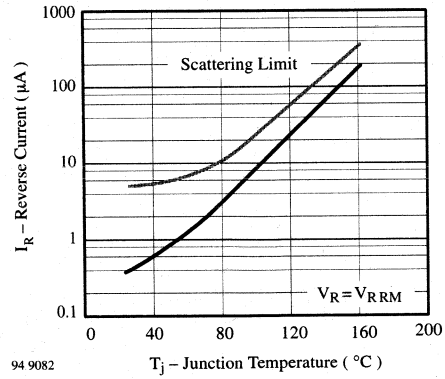

Figure 3. Reverse Current vs. Junction Temperature

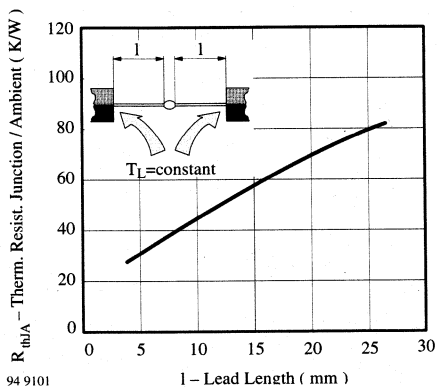

Figure 2. Thermal Resistance vs. Lead Length

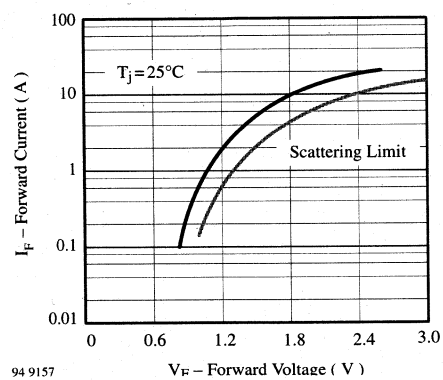

Figure 4. Forward Current vs. Forward Voltage

Dimensions in mm

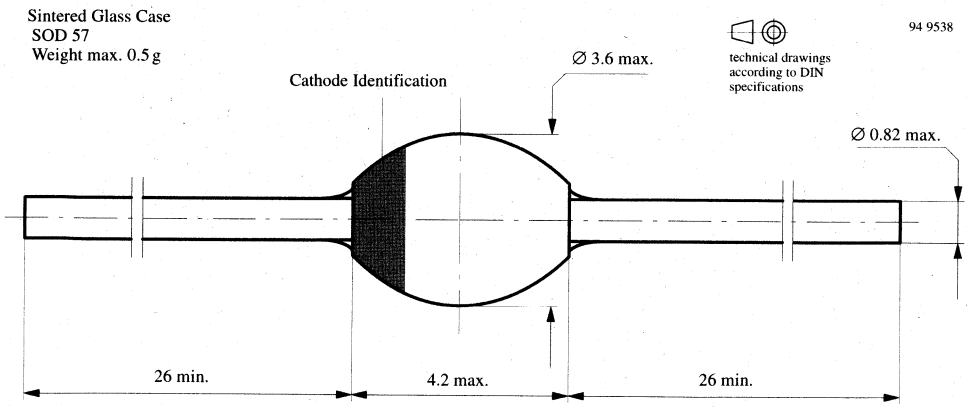

Silicon Mesa Rectifier

Features

- Controlled avalanche characteristics
- Glass passivated junction
- Hermetically sealed package
- Low reverse current
- High surge current capability

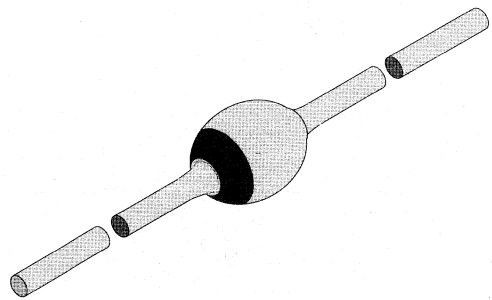

94 9539

Applications

General purpose

Absolute Maximum Ratings

$T_j = 25°C$

Parameter	Test Conditions	Type	Symbol	Value	Unit
Peak reverse voltage, non repetitive			V_{RSM}	1250	V
Reverse voltage			V_R	800	V
Peak forward surge current	t_p=10ms		I_{FSM}	50	A
Repetitive peak forward current			I_{FRM}	12	A
Average forward current	φ=180°		I_{FAV}	2	A
Pulse avalanche peak power	T_j=175°C, t_p=20µs, half sinus wave		P_R	1000	W
Max. pulse energy in avalanche mode, non repetitive (inductive load switch off)	$I_{(BR)R}$=1A, T_j=175°C		E_R	20	mWs
	i^2xt–rating		i^2xt	8	A^2xs
Junction temperature			T_j	175	°C
Storage temperature range			T_{stg}	–55...+150	°C

Maximum Thermal Resistance

$T_j = 25°C$

Parameter	Test Conditions	Symbol	Value	Unit
Junction ambient	l=10mm, T_L=constant	R_{thJA}	45	K/W
	on PC board with spacing 25mm	R_{thJA}	100	K/W

Characteristics

$T_j = 25°C$

Parameter	Test Conditions	Type	Symbol	Min	Typ	Max	Unit
Forward voltage	I_F=1A		V_F		0.9	1.0	V
	I_F=10A		V_F			1.65	V
Reverse current	V_R=800V		I_R		0.1	1	µA
	V_R=800V, T_j=100°C		I_R		5	10	µA
Breakdown voltage	I_R=100µA, t_p/T=0.01, t_p=0.3ms		$V_{(BR)}$	1250			V
Diode capacitance	V_R=0, f=0.47MHz		C_D		50		pF
Reverse recovery time	I_F=0.5A, I_R=1A, i_R=0.25A		t_{rr}			4	µs
	I_F=1A, d_i/d_t=5A/µs, V_R=50V		t_{rr}			4	µs
Reverse recovery charge	I_F=1A, d_i/d_t=5A/µs		Q_{rr}			3	µC

Typical Characteristics (T_j = 25°C unless otherwise specified)

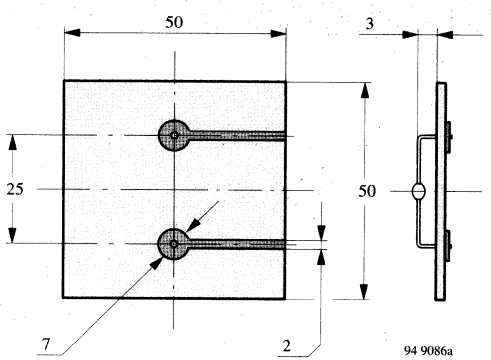

Figure 1. Epoxy glass hard tissue, board thickness 1.5 mm, $R_{thJA} \leqq 100$ K/W

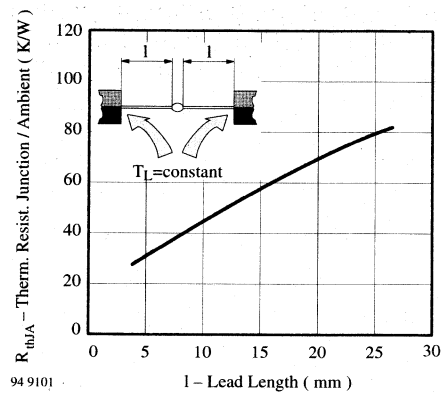

Figure 2. Thermal Resistance vs. Lead Length

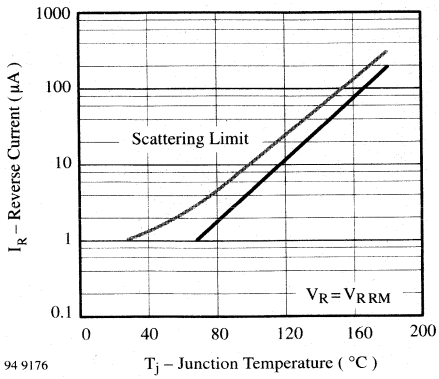

Figure 3. Reverse Current vs. Junction Temperature

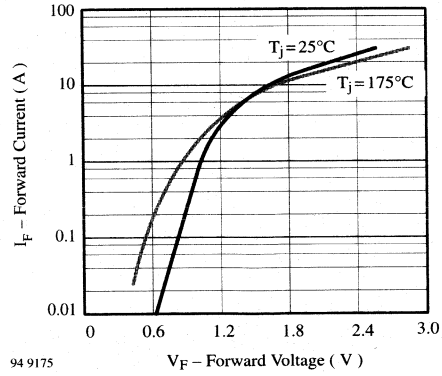

Figure 6. Forward Current vs. Forward Voltage

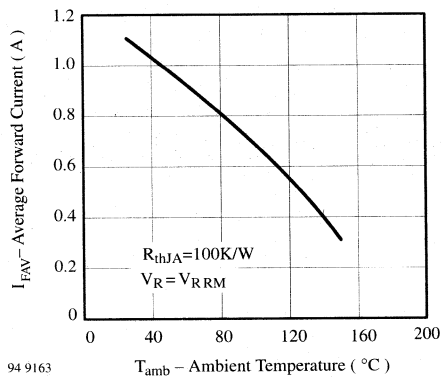

Figure 4. Average Forward Current vs. Ambient Temperature

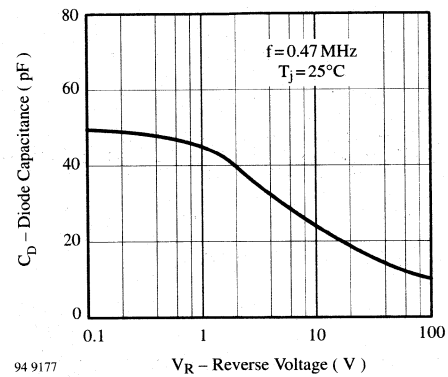

Figure 7. Diode Capacitance vs. Reverse Voltage

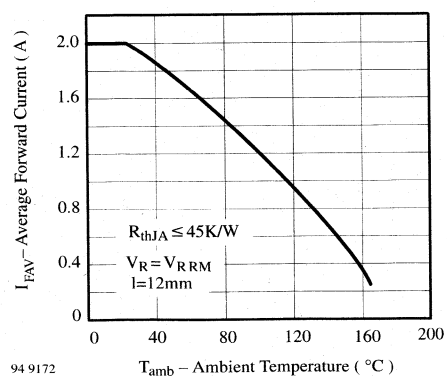

Figure 5. Average Forward Current vs. Ambient Temperature

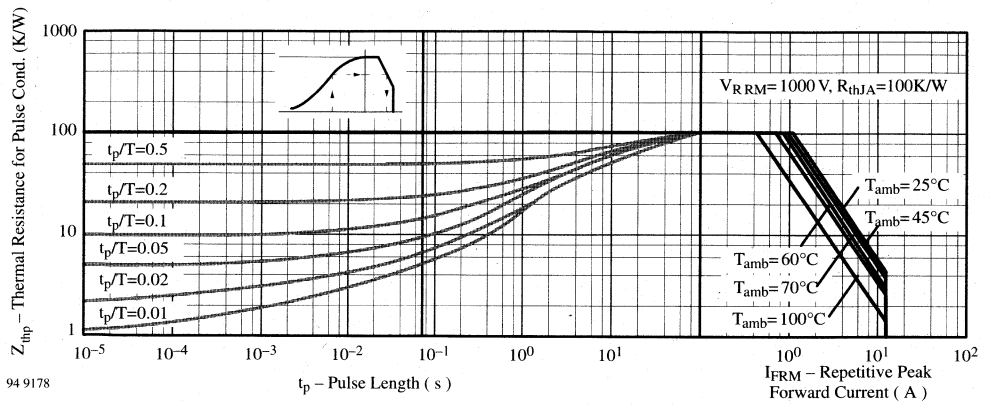

Figure 8. Thermal Response

Dimensions in mm

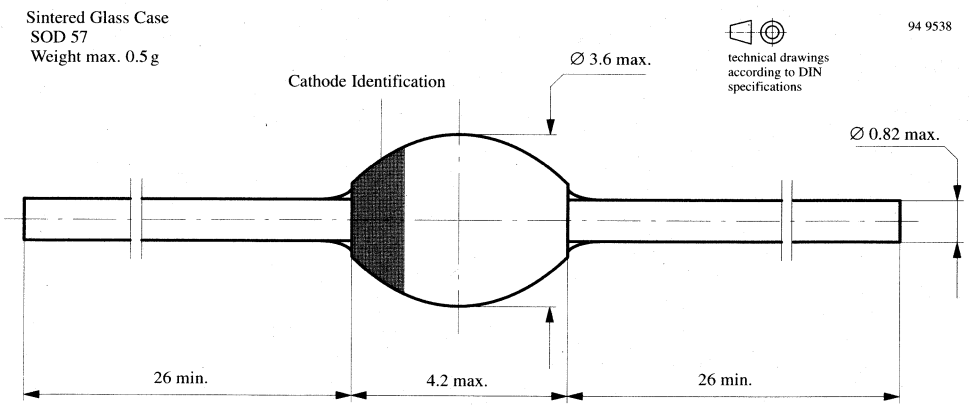

Silicon Mesa SMD Rectifier

Features

- Controlled avalanche characteristics
- Glass passivated junction
- Low reverse current
- High surge current capability
- Wave and reflow solderable

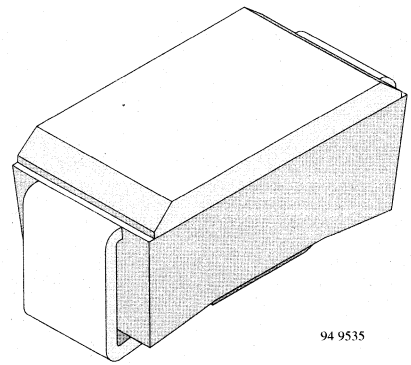

Applications

Surface mounting
General purpose rectifier

Absolute Maximum Ratings

$T_j = 25°C$

Parameter	Test Conditions	Type	Symbol	Value	Unit
Reverse voltage, repetitive peak reverse voltage		BYG10D	$V_R=V_{RRM}$	200	V
		BYG10G	$V_R=V_{RRM}$	400	V
		BYG10J	$V_R=V_{RRM}$	600	V
		BYG10K	$V_R=V_{RRM}$	800	V
		BYG10M	$V_R=V_{RRM}$	1000	V
Peak forward surge current	t_p=10ms		I_{FSM}	30	A
Average forward current			I_{FAV}	1.5	A
Junction temperature			T_j	150	°C
Storage temperature range			T_{stg}	–55...+150	°C
Max. pulse energy in avalanche mode, non repetitive (inductive load switch off)	$I_{(BR)R}$=1A, T_j=25°C		E_R	20	mWs

Maximum Thermal Resistance

$T_j = 25°C$

Parameter	Test Conditions	Symbol	Value	Unit
Junction case		R_{thJC}	25	K/W
Junction ambient	mounted on epoxy–glass hard tissue, Fig. 1a	R_{thJA}	150	K/W
	mounted on epoxy–glass hard tissue, Fig. 1b	R_{thJA}	125	K/W
	mounted on Al–oxid–ceramic (Al_2O_3), Fig. 1b	R_{thJA}	100	K/W

Characteristics

$T_j = 25°C$

Parameter	Test Conditions	Type	Symbol	Min	Typ	Max	Unit
Forward voltage	I_F=1A		V_F			1.1	V
Forward voltage	I_F=1.5A		V_F			1.15	V
Reverse current	V_R=V_{RRM}		I_R			1	µA
Reverse current	V_R=V_{RRM}, T_j=100°C		I_R			10	µA
Reverse recovery time	I_F=0.5A, I_R=1A, i_R=0.25A		t_{rr}			4	µs

Typical Characteristics (T_j = 25°C unless otherwise specified)

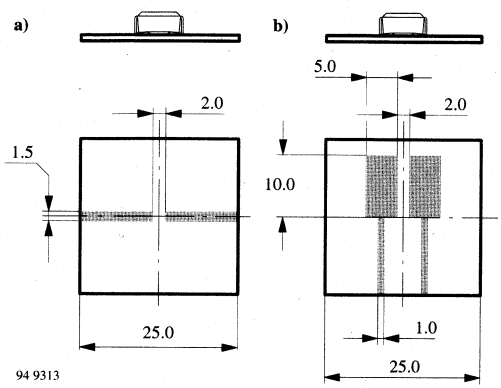

Figure 1. Boards for R_{thJA} definition (copper overlay 35µ)

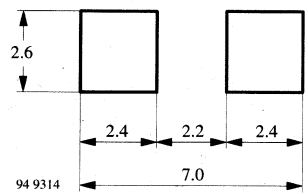

Figure 2. Recommended foot pads (in mm)

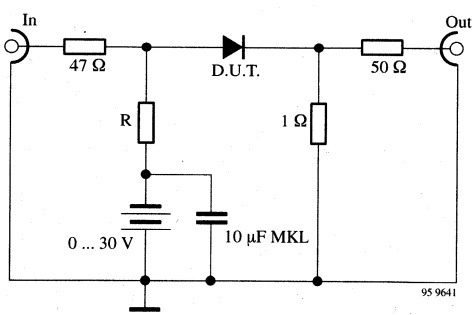

In: Pulse generator
RG = 50 Ω
tr = < 15 ns

Out: Osc.
Ri = 1 MΩ
Ci = 16 pF
tr = < 3.5 ns

Circuit 1: R = 24 Ω
Circuit 2: R = 50 Ω

Figure 3. Turn off switching test circuit

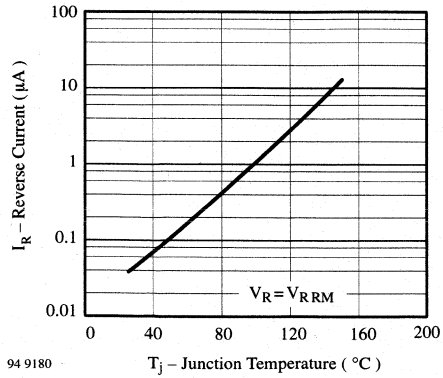

Figure 4. Reverse Current vs. Junction Temperature

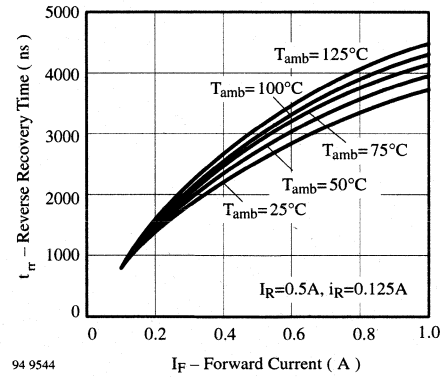

Figure 7. Reverse Recovery Time vs. Forward Current

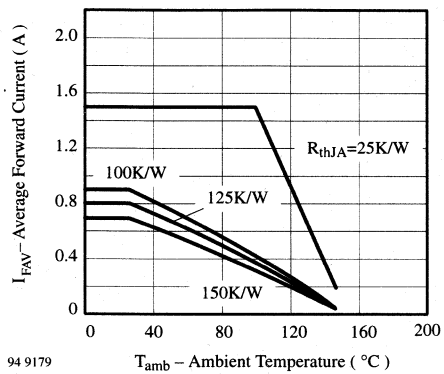

Figure 5. Average Forward Current vs. Ambient Temperature

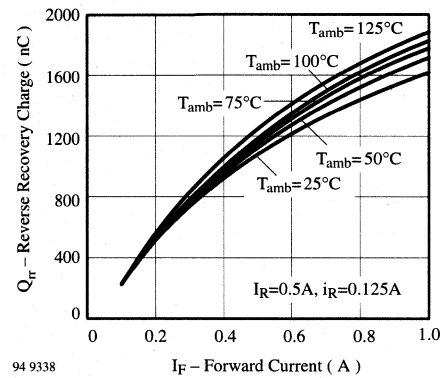

Figure 8. Reverse Recovery Charge vs. Forward Current

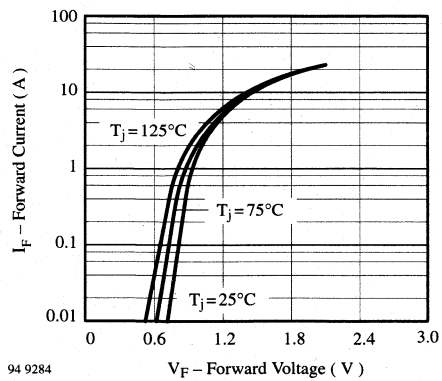

Figure 6. Forward Current vs. Forward Voltage

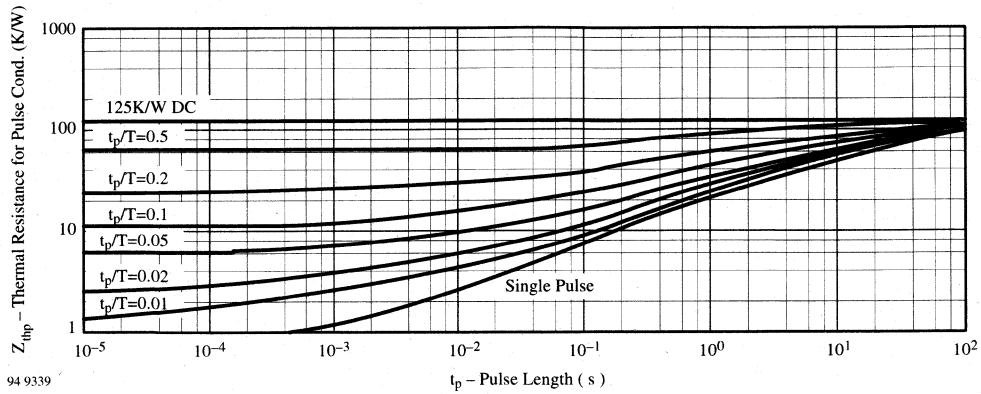

Figure 9. Thermal Response

Dimensions in mm

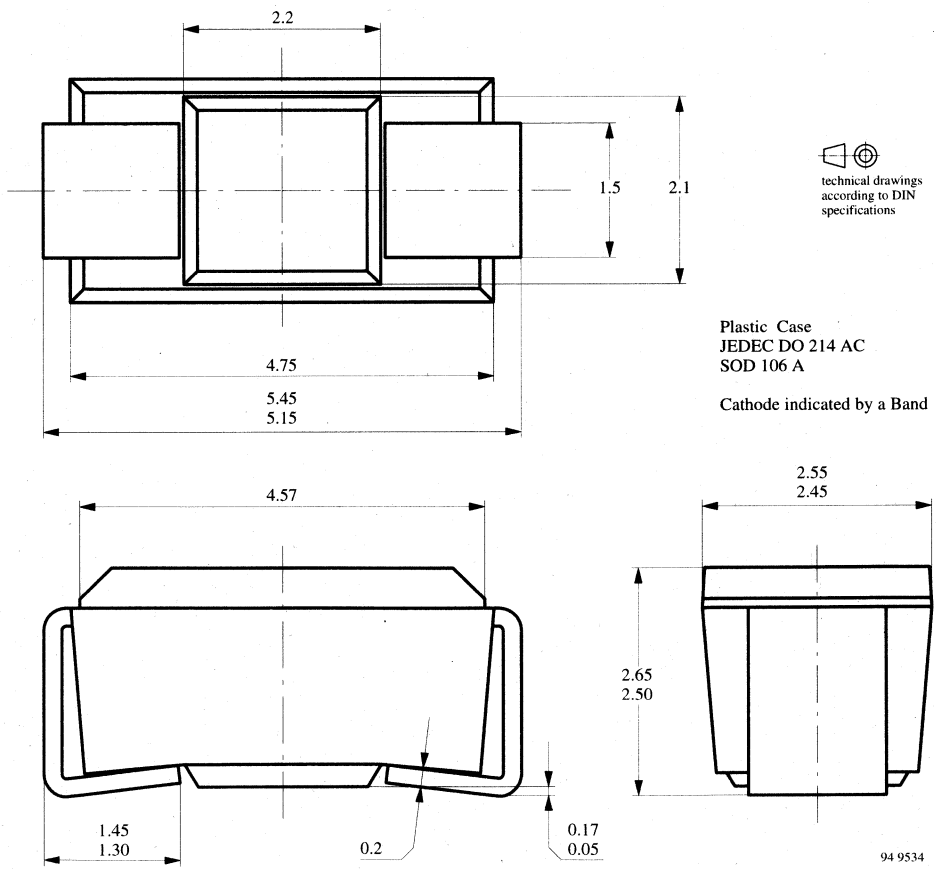

Fast Silicon Mesa SMD Rectifier

Features

- Glass passivated junction
- Low reverse current
- Soft recovery characteristics
- Fast reverse recovery time
- Good switching behaviour
- Wave and reflow solderable

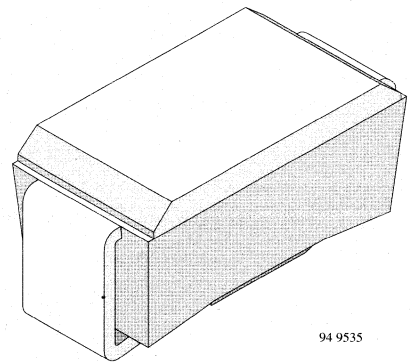

Applications

Surface mounting
Fast rectifier
Freewheeling diodes in SMPS and converters
Snubber diodes

Absolute Maximum Ratings

$T_j = 25°C$

Parameter	Test Conditions	Type	Symbol	Value	Unit
Reverse voltage, repetitive peak reverse voltage		BYG20D	$V_R=V_{RRM}$	200	V
		BYG20G	$V_R=V_{RRM}$	400	V
		BYG20J	$V_R=V_{RRM}$	600	V
Peak forward surge current	t_p=10ms		I_{FSM}	30	A
Average forward current			I_{FAV}	1.5	A
Junction temperature			T_j	150	°C
Storage temperature range			T_{stg}	–55...+150	°C
Max. pulse energy in avalanche mode, non repetitive (inductive load switch off)	$I_{(BR)R}$=1A, T_j=25°C		E_R	20	mWs

Maximum Thermal Resistance

$T_j = 25°C$

Parameter	Test Conditions	Symbol	Value	Unit
Junction case		R_{thJC}	25	K/W
Junction ambient	mounted on epoxy–glass hard tissue, Fig. 1a	R_{thJA}	150	K/W
	mounted on epoxy–glass hard tissue, Fig. 1b	R_{thJA}	125	K/W
	mounted on Al–oxid–ceramic (Al_2O_3), Fig. 1b	R_{thJA}	100	K/W

Characteristics

$T_j = 25°C$

Parameter	Test Conditions	Type	Symbol	Min	Typ	Max	Unit
Forward voltage	I_F=1A		V_F			1.3	V
	I_F=1.5A		V_F			1.4	V
Reverse current	V_R=V_{RRM}		I_R			1	µA
	V_R=V_{RRM}, T_j=100°C		I_R			10	µA
Reverse recovery time	I_F=0.5A, I_R=1A, i_R=0.25A		t_{rr}			75	ns

Typical Characteristics ($T_j = 25°C$ unless otherwise specified)

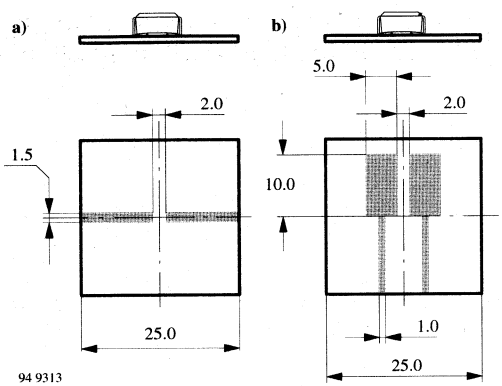

Figure 1. Boards for R_{thJA} definition (copper overlay 35µ)

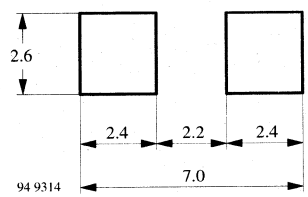

Figure 2. Recommended foot pads (in mm)

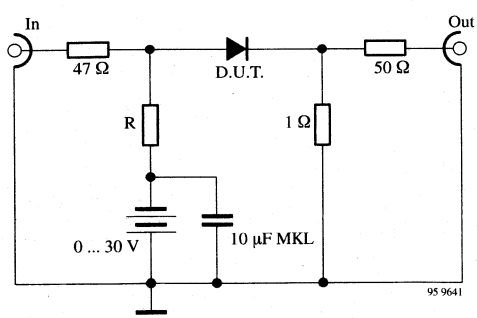

In: Pulse generator
RG = 50 Ω
tr = < 15 ns

Out: Osc.
Ri = 1 MΩ
Ci = 16 pF
tr = < 3.5 ns

Circuit 1: R = 24 Ω
Circuit 2: R = 50 Ω

Figure 3. Turn off switching test circuit

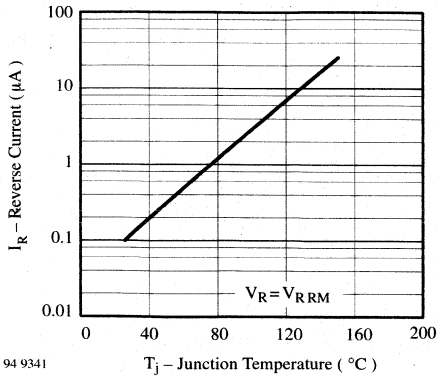

Figure 4. Reverse Current vs. Junction Temperature

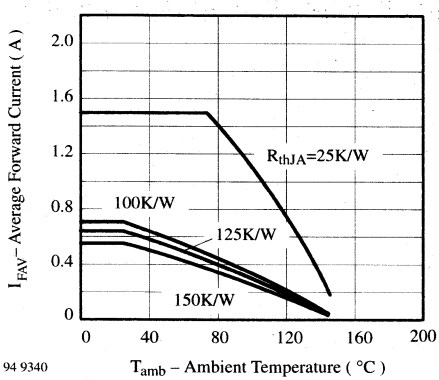

Figure 5. Average Forward Current vs. Ambient Temperature

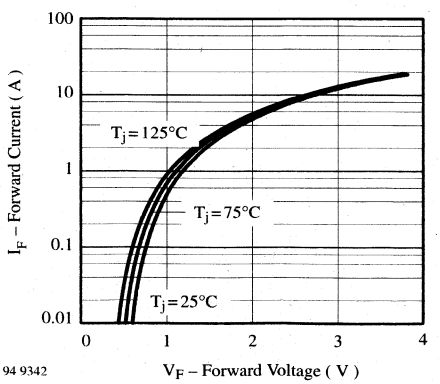

Figure 6. Forward Current vs. Forward Voltage

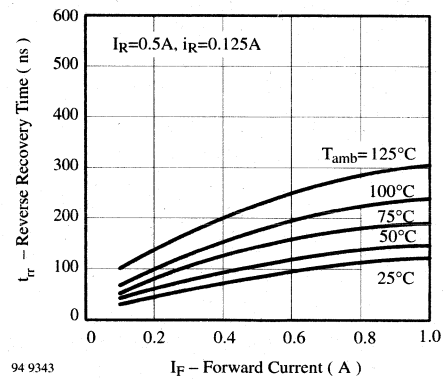

Figure 7. Reverse Recovery Time vs. Forward Current

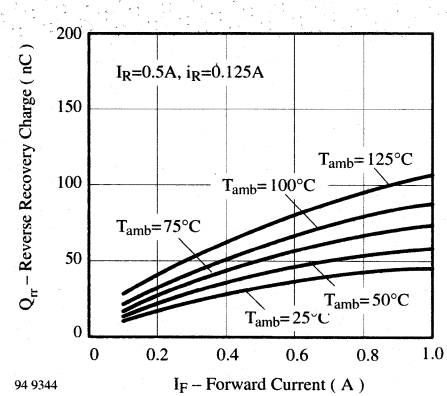

Figure 8. Reverse Recovery Charge vs. Forward Current

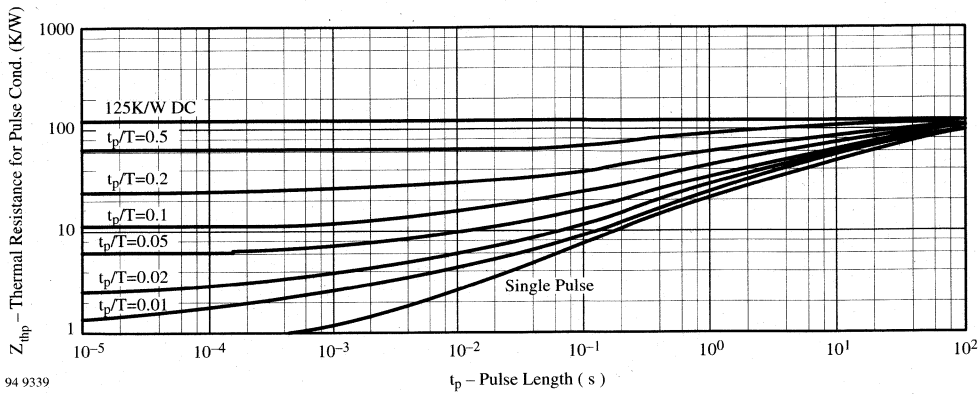

Figure 9. Thermal Response

Dimensions in mm

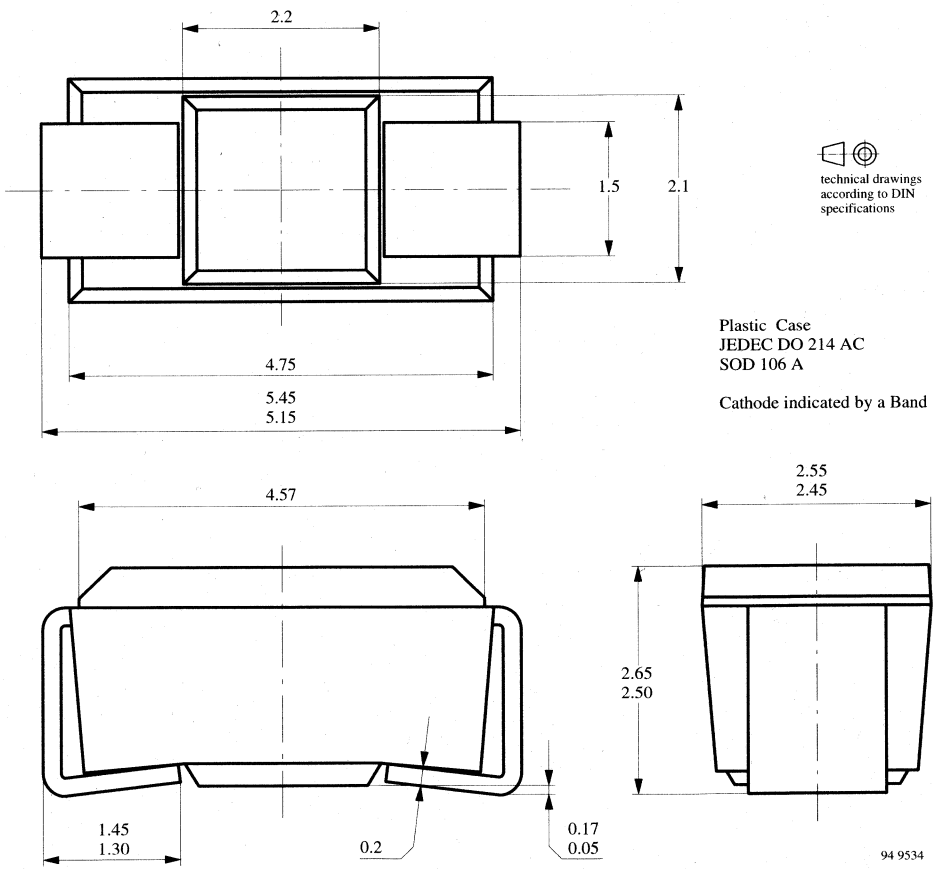

Fast Silicon Mesa SMD Rectifier

Features

- Glass passivated junction
- Low reverse current
- Soft recovery characteristics
- Fast reverse recovery time
- Good switching behaviour
- Wave and reflow solderable

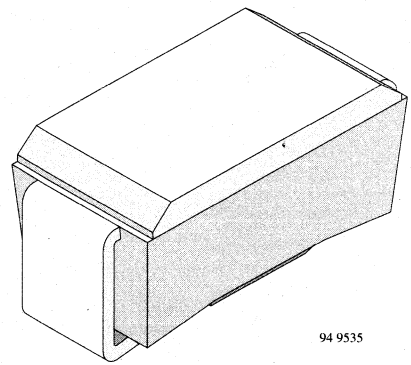

Applications

Surface mounting
Fast rectifier
Freewheeling diodes in SMPS and converters
Snubber diodes

Absolute Maximum Ratings

$T_j = 25°C$

Parameter	Test Conditions	Type	Symbol	Value	Unit
Reverse voltage, repetitive peak reverse voltage		BYG21K	$V_R=V_{RRM}$	800	V
		BYG21M	$V_R=V_{RRM}$	1000	V
Peak forward surge current	t_p=10ms		I_{FSM}	30	A
Average forward current			I_{FAV}	1.5	A
Junction temperature			T_j	150	°C
Storage temperature range			T_{stg}	–55...+150	°C
Max. pulse energy in avalanche mode, non repetitive (inductive load switch off)	$I_{(BR)R}$=1A, T_j=25°C		E_R	20	mWs

Maximum Thermal Resistance

$T_j = 25°C$

Parameter	Test Conditions	Symbol	Value	Unit
Junction case		R_{thJC}	25	K/W
Junction ambient	mounted on epoxy–glass hard tissue, Fig. 1a	R_{thJA}	150	K/W
	mounted on epoxy–glass hard tissue, Fig. 1b	R_{thJA}	125	K/W
	mounted on Al–oxid–ceramic (Al_2O_3), Fig. 1b	R_{thJA}	100	K/W

Characteristics

$T_j = 25°C$

Parameter	Test Conditions	Type	Symbol	Min	Typ	Max	Unit
Forward voltage	I_F=1A		V_F			1.5	V
	I_F=1.5A		V_F			1.6	V
Reverse current	V_R=V_{RRM}		I_R			1	µA
	V_R=V_{RRM}, T_j=100°C		I_R			10	µA
Reverse recovery time	I_F=0.5A, I_R=1A, i_R=0.25A		t_{rr}			120	ns

Typical Characteristics (T_j = 25°C unless otherwise specified)

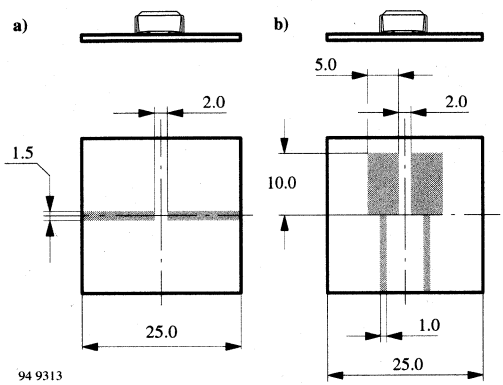

Figure 1. Boards for R_{thJA} definition (copper overlay 35µ)

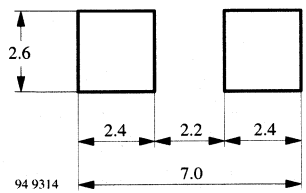

Figure 2. Recommended foot pads (in mm)

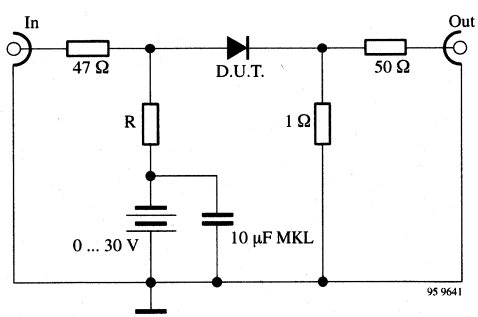

In: Pulse generator
RG = 50 Ω
tr = < 15 ns

Out: Osc.
Ri = 1 MΩ
Ci = 16 pF
tr = < 3.5 ns

Circuit 1: R = 24 Ω
Circuit 2: R = 50 Ω

Figure 3. Turn off switching test circuit

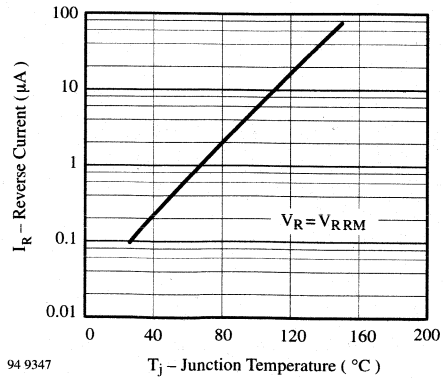

Figure 4. Reverse Current vs. Junction Temperature

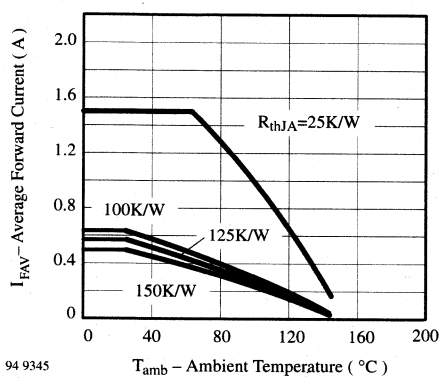

Figure 5. Average Forward Current vs. Ambient Temperature

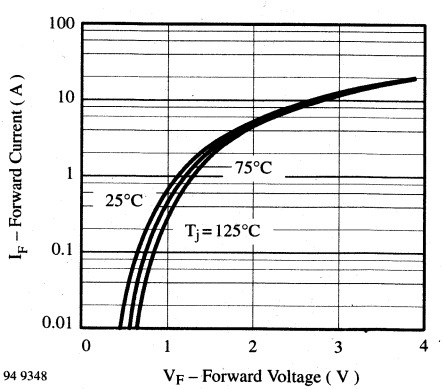

Figure 6. Forward Current vs. Forward Voltage

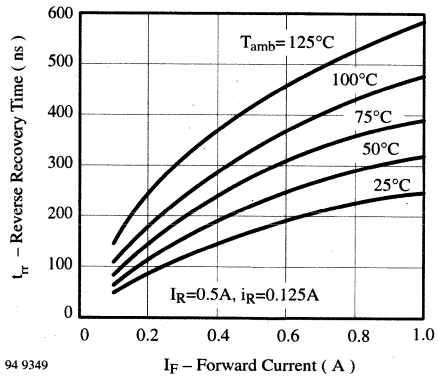

Figure 7. Reverse Recovery Time vs. Forward Current

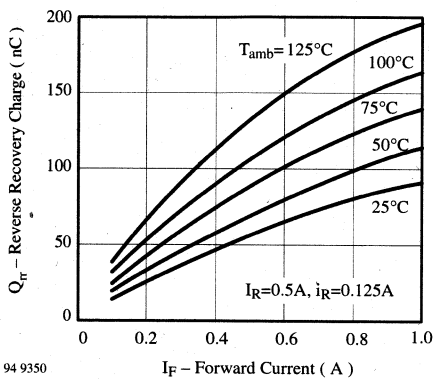

Figure 8. Reverse Recovery Charge vs. Forward Current

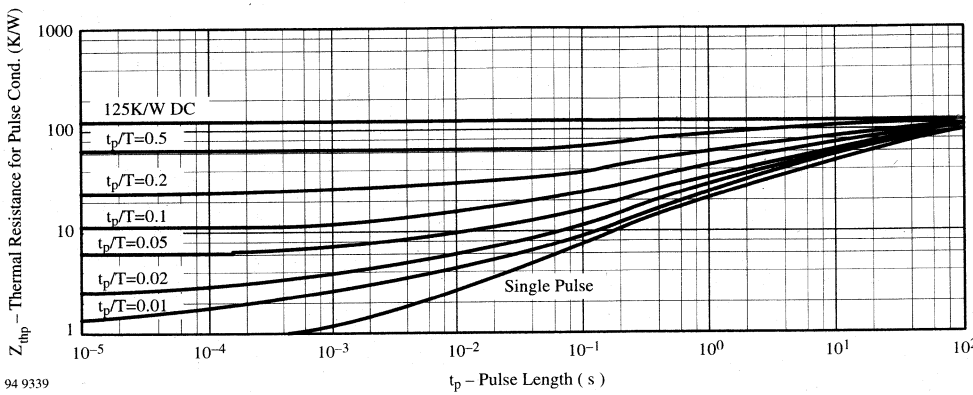

Figure 9. Thermal Response

Dimensions in mm

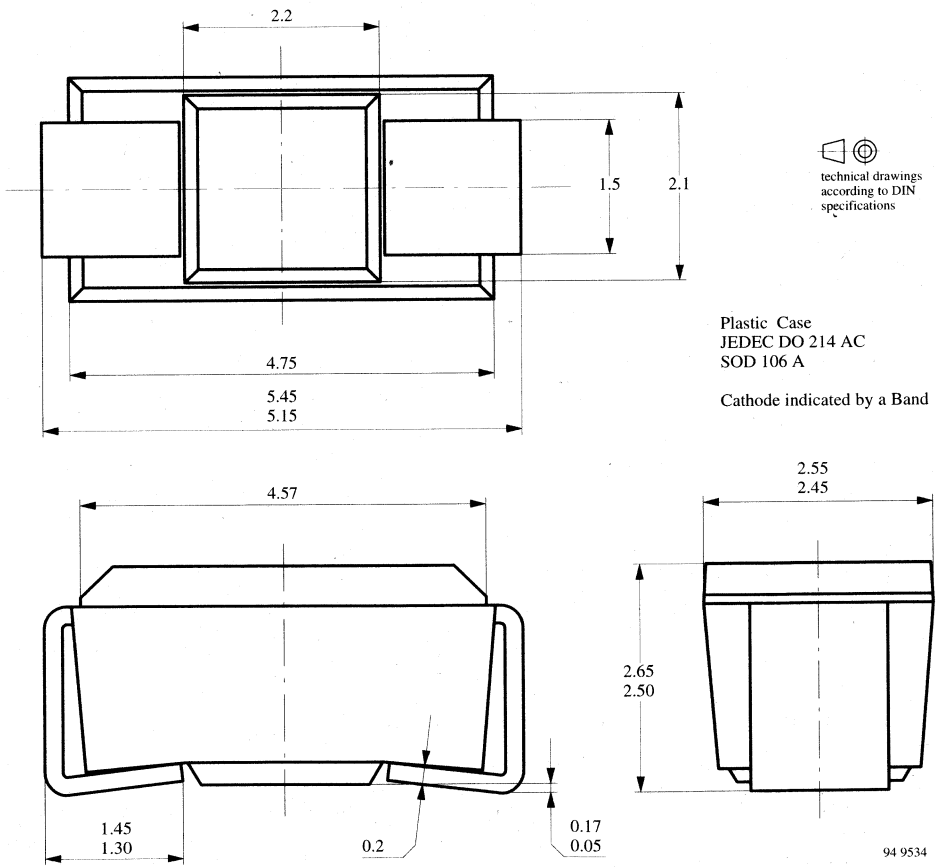

Super Fast Silicon Mesa SMD Rectifier

Features

- Controlled avalanche characteristic
- Glass passivated junction
- Low reverse current
- Low forward voltage
- Soft recovery characteristic
- Very fast reverse recovery time
- Good switching behaviour
- Wave and reflow solderable

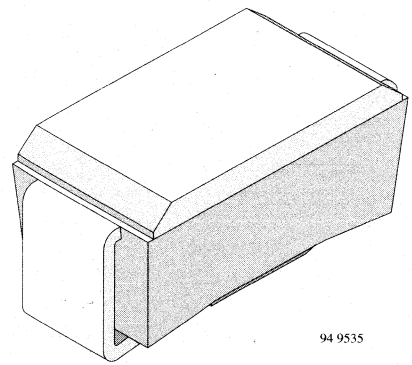

Applications

Surface mounting
Super fast rectifier
Freewheeling diodes in SMPS and converters
Snubber diodes

Absolute Maximum Ratings

$T_j = 25°C$

Parameter	Test Conditions	Type	Symbol	Value	Unit
Reverse voltage, repetitive peak reverse voltage		BYG22A	$V_R=V_{RRM}$	50	V
		BYG22B	$V_R=V_{RRM}$	100	V
		BYG22D		200	V
Peak forward surge current	t_p=10ms		I_{FSM}	35	A
Average forward current			I_{FAV}	2	A
Junction temperature			T_j	150	°C
Storage temperature range			T_{stg}	–55...+150	°C
Max. pulse energy in avalanche mode, non repetitive (inductive load switch off)	$I_{(BR)R}$=1A, T_j=25°C		E_R	20	mWs

Maximum Thermal Resistance

$T_j = 25°C$

Parameter	Test Conditions	Symbol	Value	Unit
Junction case		R_{thJC}	25	K/W
Junction ambient	mounted on epoxy–glass hard tissue, Fig. 1a	R_{thJA}	150	K/W
	mounted on epoxy–glass hard tissue, Fig. 1b	R_{thJA}	125	K/W
	mounted on Al–oxid–ceramic (Al_2O_3), Fig. 1b	R_{thJA}	100	K/W

Characteristics

$T_j = 25°C$

Parameter	Test Conditions	Type	Symbol	Min	Typ	Max	Unit
Forward voltage	I_F=1A		V_F			1	V
	I_F=2A		V_F			1.1	V
Reverse current	V_R=V_{RRM}		I_R			1	µA
	V_R=V_{RRM}, T_j=100°C		I_R			10	µA
Reverse recovery time	I_F=0.5A, I_R=1A, i_R=0.25A		t_{rr}			25	ns

Typical Characteristics ($T_j = 25°C$ unless otherwise specified)

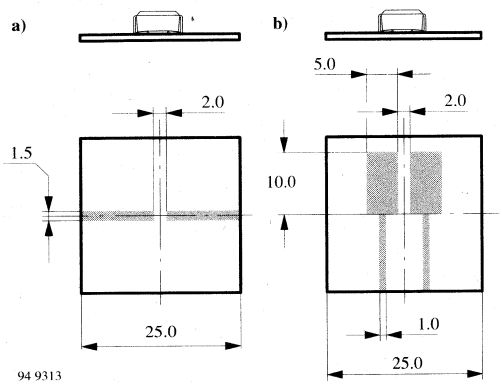

Figure 1. Boards for R_{thJA} definition (copper overlay 35µ)

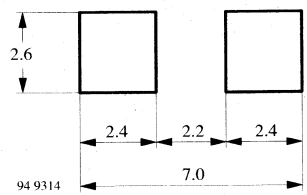

Figure 2. Recommended foot pads (in mm)

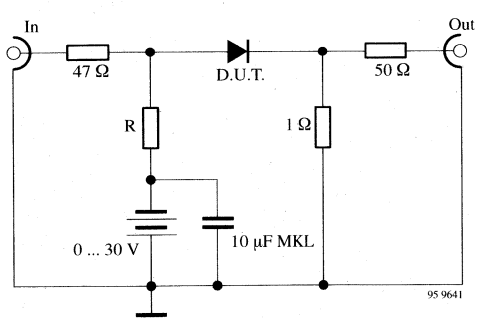

In: Pulse generator
RG = 50 Ω
tr = < 15 ns

Out: Osc.
Ri = 1 MΩ
Ci = 16 pF
tr = < 3.5 ns

Circuit 1: R = 24 Ω
Circuit 2: R = 50 Ω

Figure 3. Turn off switching test circuit

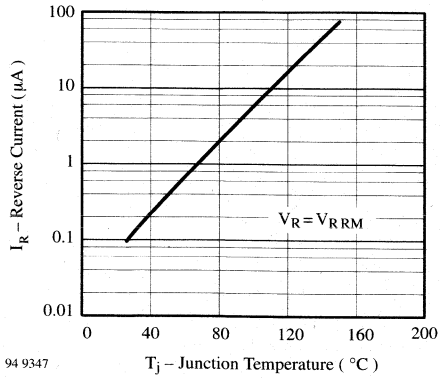

Figure 4. Reverse Current vs. Junction Temperature

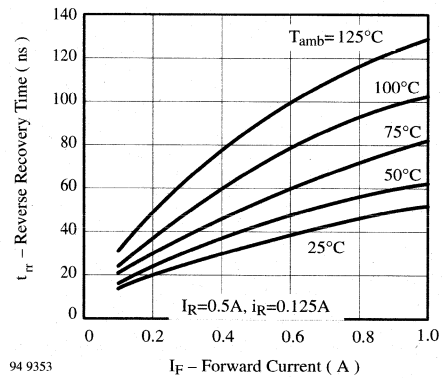

Figure 7. Reverse Recovery Time vs. Forward Current

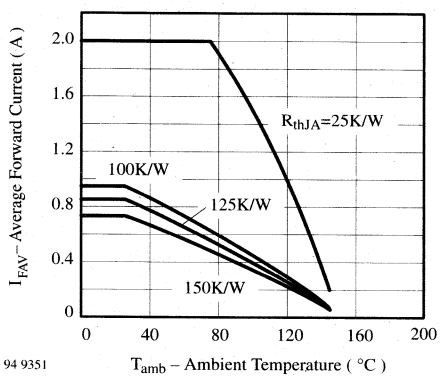

Figure 5. Average Forward Current vs. Ambient Temperature

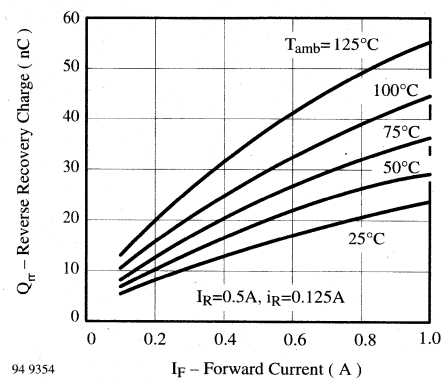

Figure 8. Reverse Recovery Charge vs. Forward Current

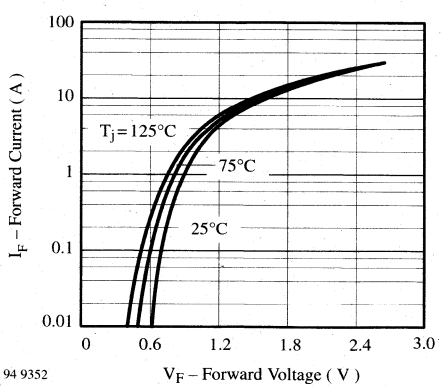

Figure 6. Forward Current vs. Forward Voltage

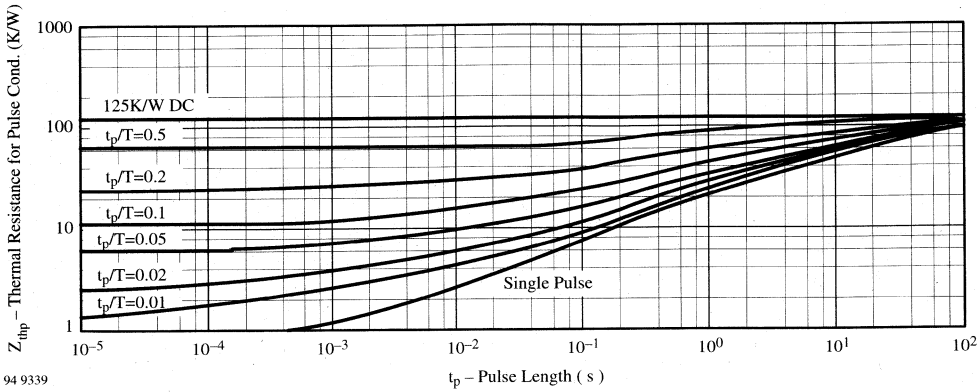

Figure 9. Thermal Response

Dimensions in mm

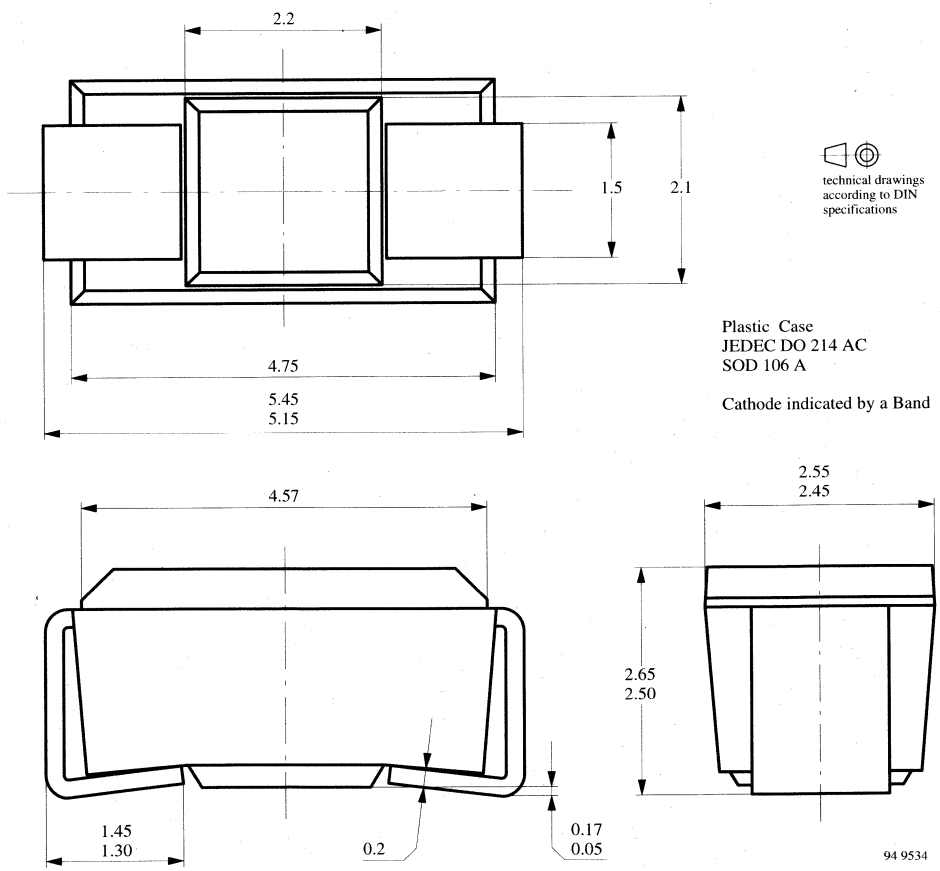

Very Fast Soft–Recovery Avalanche Rectifier

Features

- Glass passivated
- Hermetically sealed package
- Very low switching losses
- Low reverse current
- High reverse voltage

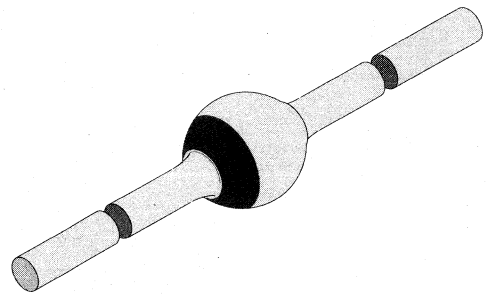

94 9588

Applications

Switched mode power supplies
High–frequency inverter circuits

Absolute Maximum Ratings

$T_j = 25°C$

Parameter	Test Conditions	Type	Symbol	Value	Unit
Repetitive peak reverse voltage		BYM36A	V_{RRM}	200	V
		BYM36B	V_{RRM}	400	V
		BYM36C	V_{RRM}	600	V
		BYM36D	V_{RRM}	800	V
		BYM36E	V_{RRM}	1000	V
Reverse voltage		BYM36A	V_R	200	V
		BYM36B	V_R	400	V
		BYM36C	V_R	600	V
		BYM36D	V_R	800	V
		BYM36E	V_R	1000	V
Peak forward surge current	t_p=10ms, half sinewave		I_{FSM}	65	A
Average forward current		BYM36A	I_{FAV}	3	A
		BYM36B	I_{FAV}	3	A
		BYM36C	I_{FAV}	3	A
		BYM36D	I_{FAV}	2.9	A
		BYM36E	I_{FAV}	2.9	A
Non repetitive reverse avalanche energy	$I_{(BR)R}$=400mA, inductive load		E_R	10	mJ
Junction temperature			T_j	175	°C
Storage temperature range			T_{stg}	–55...+175	°C

Maximum Thermal Resistance

$T_j = 25°C$

Parameter	Test Conditions	Symbol	Value	Unit
Junction ambient	l=10mm, T_L=constant	R_{thJA}	25	K/W

Characteristics

$T_j = 25°C$

Parameter	Test Conditions	Type	Symbol	Min	Typ	Max	Unit
Forward voltage	I_F=3A	BYM36A	V_F			1.6	V
		BYM36B	V_F			1.6	V
		BYM36C	V_F			1.6	V
		BYM36D	V_F			1.78	V
		BYM36E	V_F			1.78	V
	I_F=3A, T_j=175°C	BYM36A	V_F			1.22	V
		BYM36B	V_F			1.22	V
		BYM36C	V_F			1.22	V
		BYM36D	V_F			1.28	V
		BYM36E	V_F			1.28	V
Reverse current	V_R=V_{RRM}		I_R			5	µA
	V_R=V_{RRM}, T_j=150°C		I_R			100	µA
Reverse breakdown voltage	I_R=100µA	BYM36A	$V_{(BR)R}$	300			V
		BYM36B	$V_{(BR)R}$	500			V
		BYM36C	$V_{(BR)R}$	700			V
		BYM36D	$V_{(BR)R}$	900			V
		BYM36E	$V_{(BR)R}$	1100			V
Reverse recovery time	I_F=0.5A, I_R=1A, i_R=0.25A	BYM36A	t_{rr}			100	ns
		BYM36B	t_{rr}			100	ns
		BYM36C	t_{rr}			100	ns
		BYM36D	t_{rr}			150	ns
		BYM36E	t_{rr}			150	ns
Switching behaviour	I_F=2A, I_{RM}=1A, V_R=400V, Fig. 1		I_{SLP}			–200	mA

Typical Characteristics (T_j = 25°C unless otherwise specified)

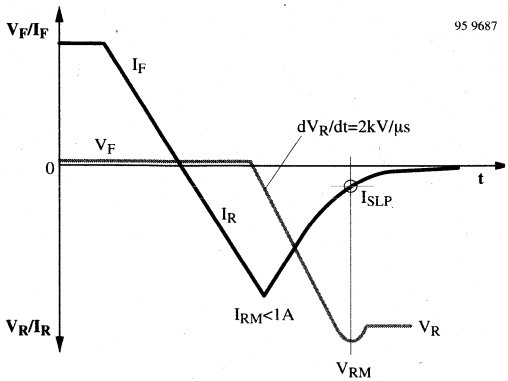

Figure 1. I_{SLP}–Definition

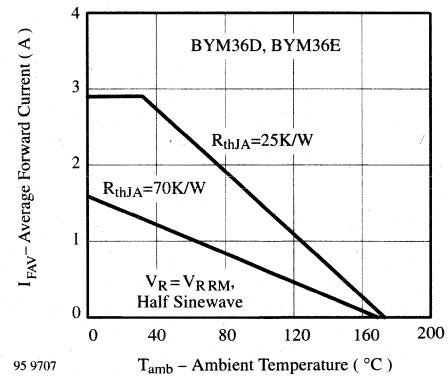

Figure 4. Average Forward Current vs. Ambient Temperature

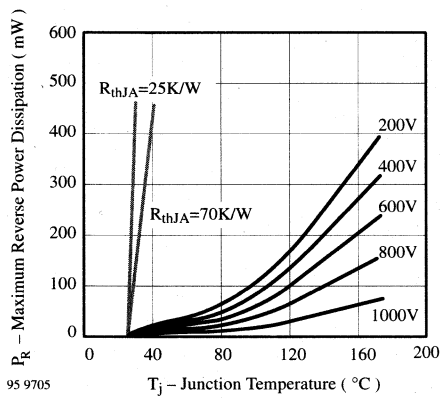

Figure 2. .Maximum Reverse Power Dissipation vs. Junction Temperature

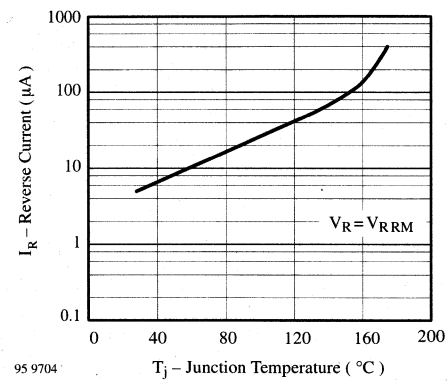

Figure 5. Reverse Current vs. Junction Temperature

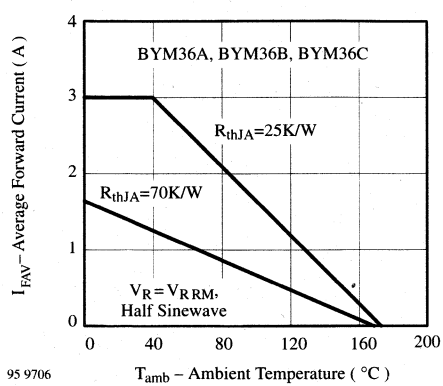

Figure 3. Average Forward Current vs. Ambient Temperature

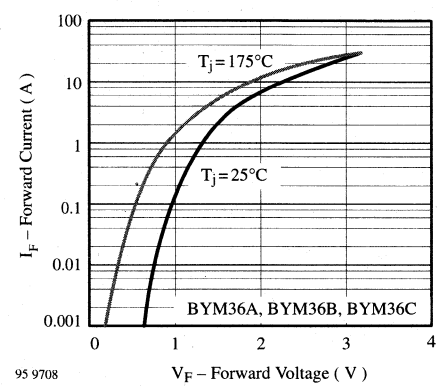

Figure 6. Forward Current vs. Forward Voltage

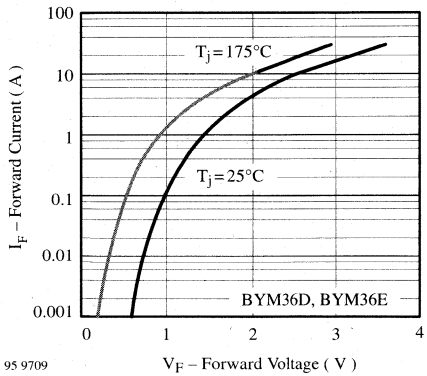

Figure 7. Forward Current vs. Forward Voltage

Dimensions in mm

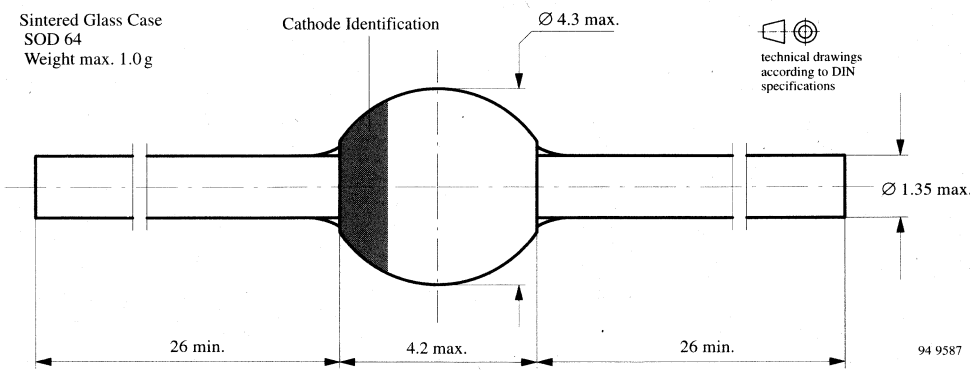

Schottky Barrier Rectifier

Features

- High efficiency
- Low power losses
- Very low switching losses
- Low reverse current
- High surge capability

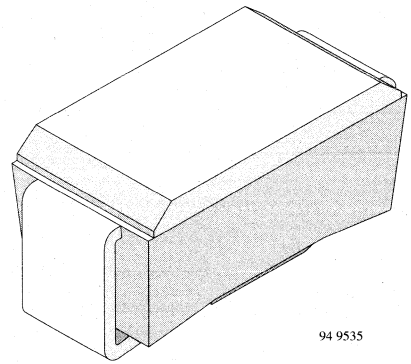

Applications

Polarity protection
Low voltage, high frequency rectifiers

Absolute Maximum Ratings

$T_j = 25°C$

Parameter	Test Conditions	Type	Symbol	Value	Unit
Repetitive peak reverse voltage		BYS10–25	V_{RRM}	25	V
		BYS10–35	V_{RRM}	35	V
		BYS10–45	V_{RRM}	45	V
Reverse voltage		BYS10–25	V_R	25	V
		BYS10–35	V_R	35	V
		BYS10–45	V_R	45	V
Peak forward surge current	t_p=10ms, half sinewave		I_{FSM}	30	A
Average forward current			I_{FAV}	1.5	A
Junction temperature			T_j	150	°C
Storage temperature range			T_{stg}	–55...+150	°C

Maximum Thermal Resistance

$T_j = 25°C$

Parameter	Test Conditions	Symbol	Value	Unit
Junction lead	T_L=constant	R_{thJL}	25	K/W
Junction ambient	mounted on epoxy–glass hard tissue, Fig. 1a	R_{thJA}	150	K/W
	mounted on epoxy–glass hard tissue, Fig. 1b	R_{thJA}	125	K/W
	mounted on Al–oxid–ceramic (Al_2O_3), Fig. 1b	R_{thJA}	100	K/W

Characteristics

$T_j = 25°C$

Parameter	Test Conditions	Type	Symbol	Min	Typ	Max	Unit
Forward voltage	I_F=1A		V_F			500	mV
Reverse current	V_R=V_{RRM}		I_R			500	µA
	V_R=V_{RRM}, T_j=100°C		I_R			10	mA

Typical Characteristics (T_j = 25°C unless otherwise specified)

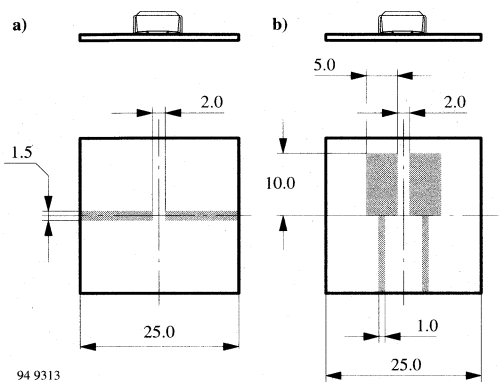

Figure 1. Boards for R_{thJA} definition (copper overlay 35µ)

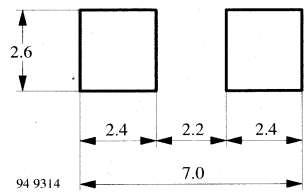

Figure 2. Recommended foot pads (in mm)

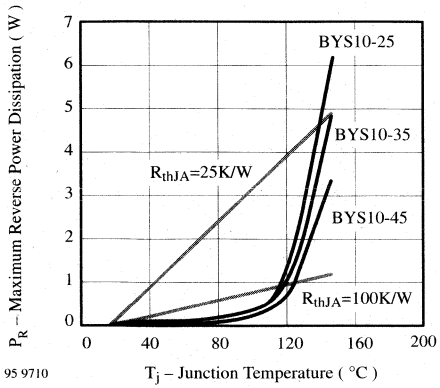

Figure 3. Maximum Reverse Power Dissipation vs. Junction Temperature

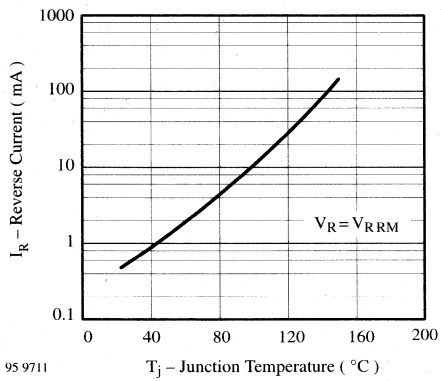

Figure 4. Reverse Current vs. Junction Temperature

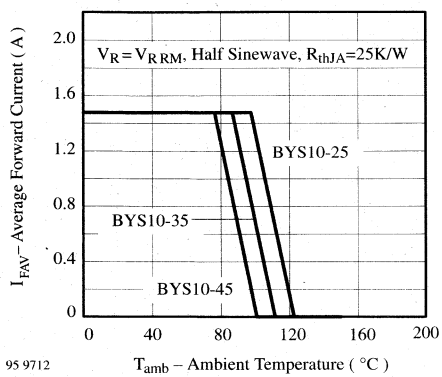

Figure 5. Average Forward Current vs. Ambient Temperature

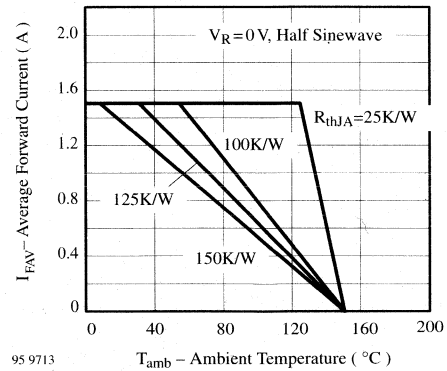

Figure 6. Average Forward Current vs. Ambient Temperature

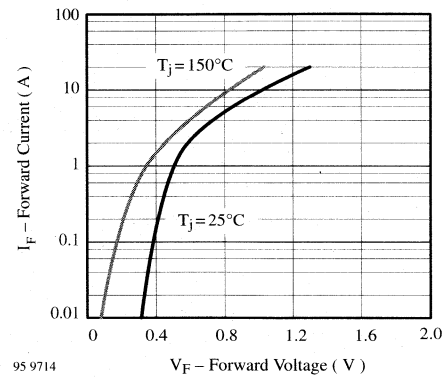

Figure 7. Forward Current vs. Forward Voltage

Dimensions in mm

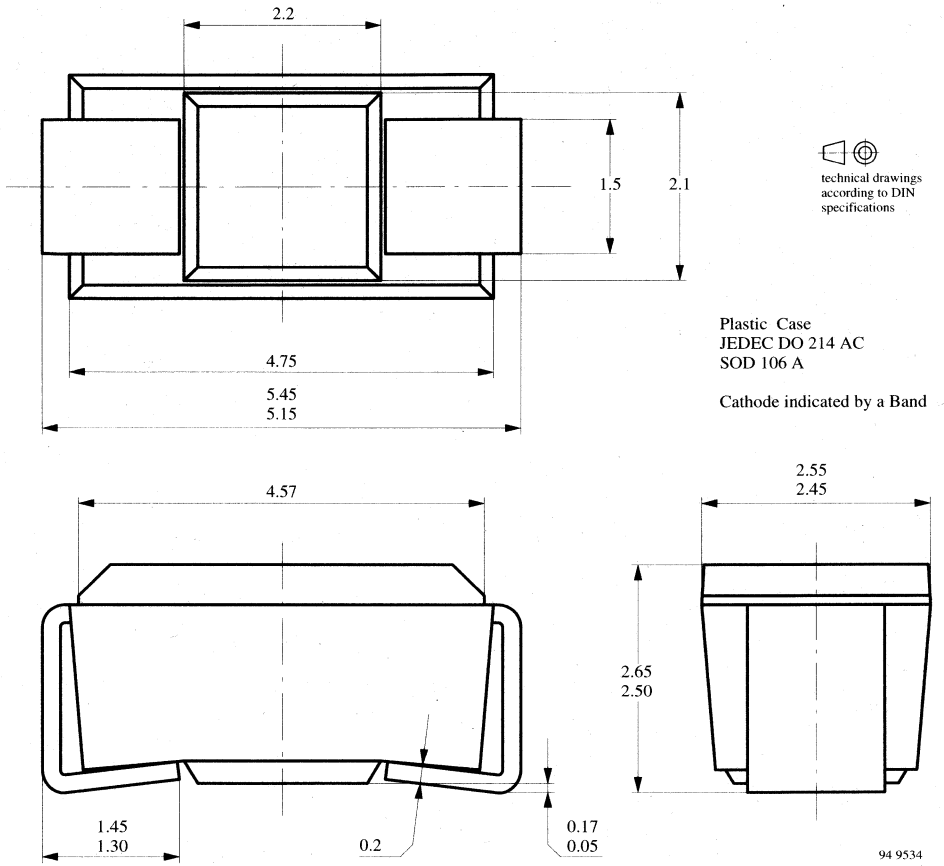

BYS11–90

Schottky Barrier Rectifier

Features

- High efficiency
- Low power losses
- Very low switching losses
- Low reverse current
- High surge capability

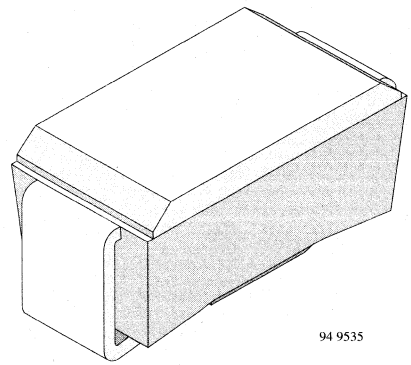

Applications

Polarity protection
Low voltage, high frequency rectifiers

Absolute Maximum Ratings

$T_j = 25°C$

Parameter	Test Conditions	Type	Symbol	Value	Unit
Repetitive peak reverse voltage			V_{RRM}	90	V
Reverse voltage			V_R	90	V
Peak forward surge current	t_p=10ms, half sinewave		I_{FSM}	30	A
Average forward current			I_{FAV}	1.5	A
Junction temperature			T_j	150	°C
Storage temperature range			T_{stg}	–55...+150	°C

Maximum Thermal Resistance

$T_j = 25°C$

Parameter	Test Conditions	Symbol	Value	Unit
Junction lead	T_L=constant	R_{thJL}	25	K/W
Junction ambient	mounted on epoxy–glass hard tissue, Fig. 1a	R_{thJA}	150	K/W
	mounted on epoxy–glass hard tissue, Fig. 1b	R_{thJA}	125	K/W
	mounted on Al–oxid–ceramic (Al_2O_3), Fig. 1b	R_{thJA}	100	K/W

Characteristics

$T_j = 25°C$

Parameter	Test Conditions	Type	Symbol	Min	Typ	Max	Unit
Forward voltage	I_F=1A		V_F			900	mV
Reverse current	V_R=V_{RRM}		I_R			100	µA
	V_R=V_{RRM}, T_j=100°C		I_R			1	mA

Typical Characteristics (T_j = 25°C unless otherwise specified)

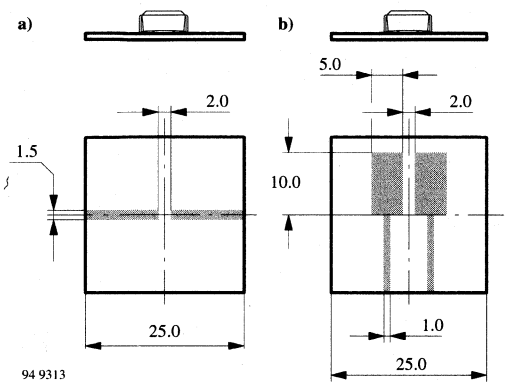

Figure 1. Boards for R_{thJA} definition (copper overlay 35µ)

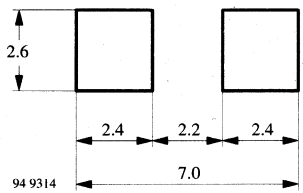

Figure 2. Recommended foot pads (in mm)

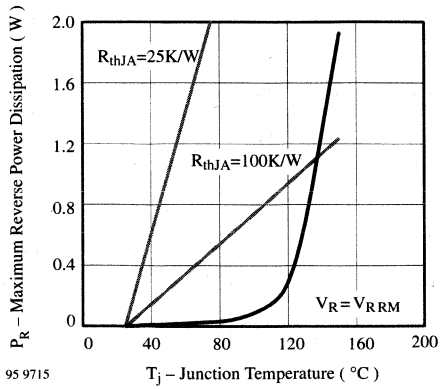

Figure 3. Maximum Reverse Power Dissipation vs. Junction Temperature

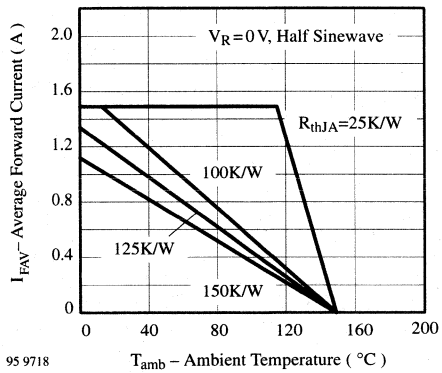

Figure 6. Average Forward Current vs. Ambient Temperature

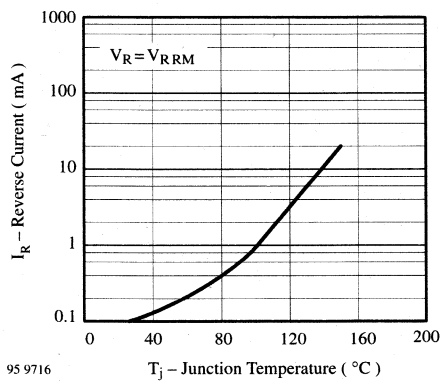

Figure 4. Reverse Current vs. Junction Temperature

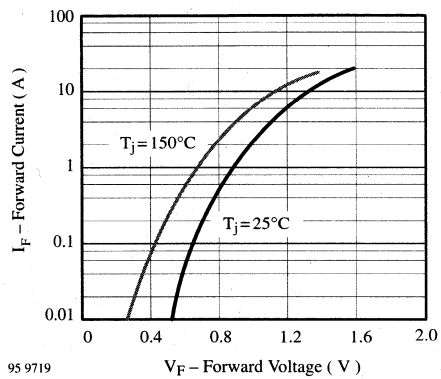

Figure 7. Forward Current vs. Forward Voltage

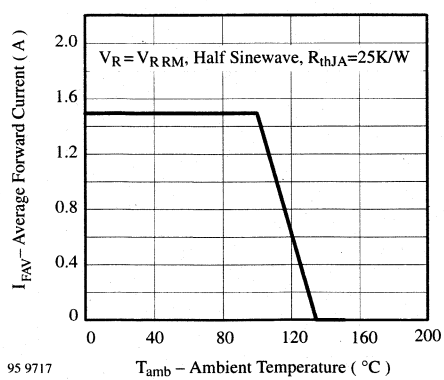

Figure 5. Average Forward Current vs. Ambient Temperature

Dimensions in mm

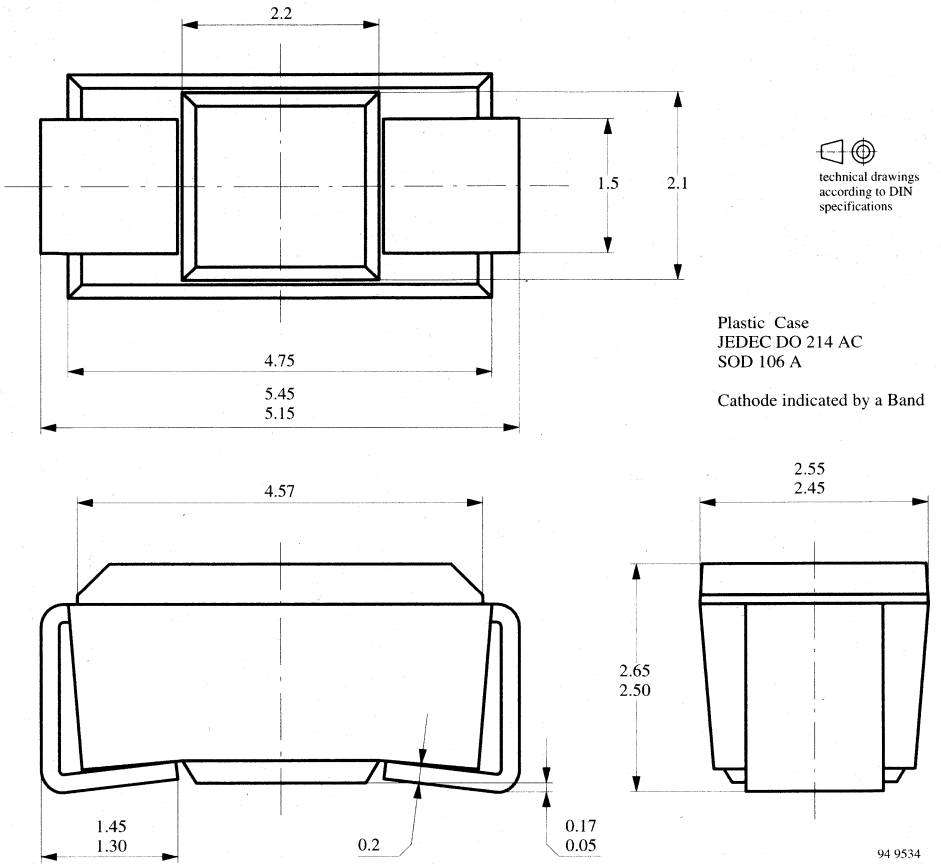

Schottky Barrier Rectifier

Features

- High efficiency
- Low power losses
- Very low switching losses
- Low reverse current
- High surge capability

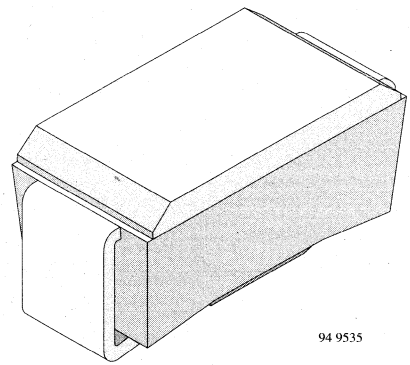

Applications

Polarity protection
Low voltage, high frequency rectifiers

Absolute Maximum Ratings

$T_j = 25°C$

Parameter	Test Conditions	Type	Symbol	Value	Unit
Repetitive peak reverse voltage			V_{RRM}	90	V
Reverse voltage			V_R	90	V
Peak forward surge current	t_p=10ms, half sinewave		I_{FSM}	30	A
Average forward current			I_{FAV}	1.5	A
Junction temperature			T_j	150	°C
Storage temperature range			T_{stg}	–55...+150	°C

Maximum Thermal Resistance

$T_j = 25°C$

Parameter	Test Conditions	Symbol	Value	Unit
Junction lead	T_L=constant	R_{thJL}	25	K/W
Junction ambient	mounted on epoxy–glass hard tissue, Fig. 1a	R_{thJA}	150	K/W
	mounted on epoxy–glass hard tissue, Fig. 1b	R_{thJA}	125	K/W
	mounted on Al–oxid–ceramic (Al_2O_3), Fig. 1b	R_{thJA}	100	K/W

Characteristics

$T_j = 25°C$

Parameter	Test Conditions	Type	Symbol	Min	Typ	Max	Unit
Forward voltage	I_F=1A		V_F			900	mV
	I_F=15mA		V_F			360	mV
Reverse current	V_R=V_{RRM}		I_R			200	µA
	V_R=V_{RRM}, T_j=100°C		I_R			2	mA

Typical Characteristics ($T_j = 25°C$ unless otherwise specified)

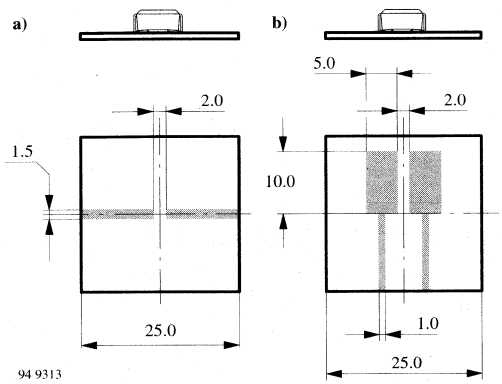

Figure 1. Boards for R_{thJA} definition (copper overlay 35µ)

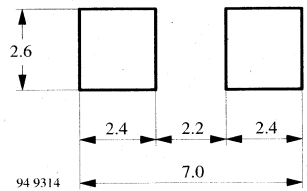

Figure 2. Recommended foot pads (in mm)

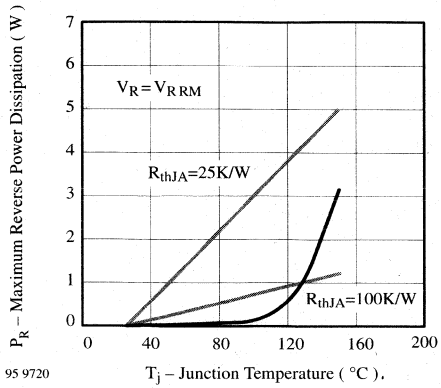

Figure 3. Maximum Reverse Power Dissipation vs. Junction Temperature

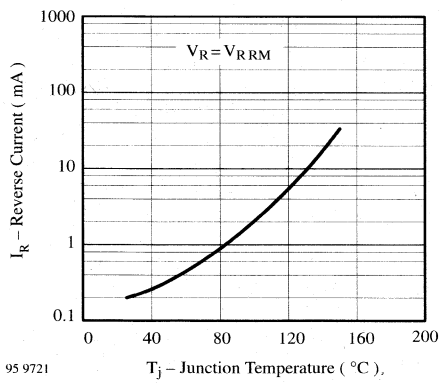

Figure 4. Reverse Current vs. Junction Temperature

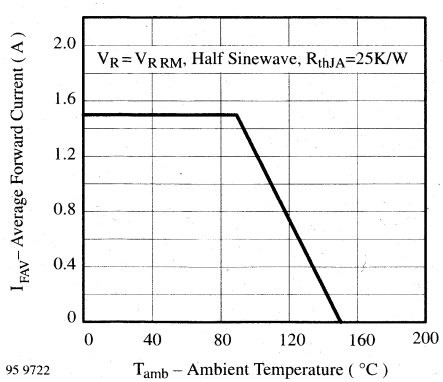

Figure 5. Average Forward Current vs. Ambient Temperature

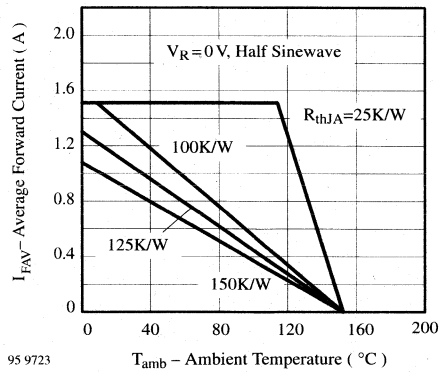

Figure 6. Average Forward Current vs. Ambient Temperature

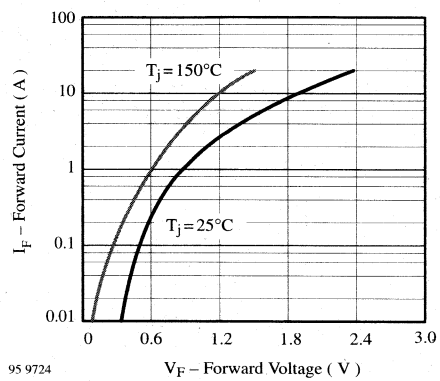

Figure 7. Forward Current vs. Forward Voltage

Dimensions in mm

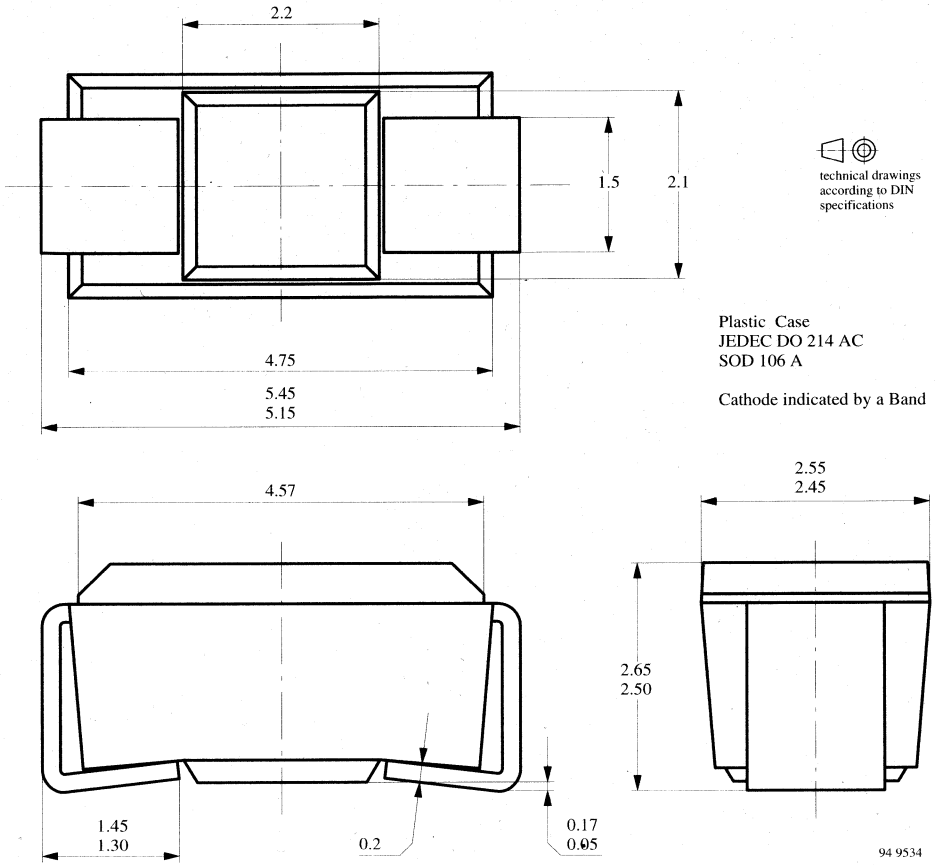

BYT08P/600A/800A

Fast Recovery Silicon Power Rectifier

Features

- Multiple diffusion
- Mesa glass passivated
- Low switch on power losses
- Good soft recovery behaviour
- Fast forward recovery time
- Fast reverse recovery time
- Low reverse current
- Very low turn on transient peak voltage
- Very good reverse current stability at high temperature
- Low thermal resistance

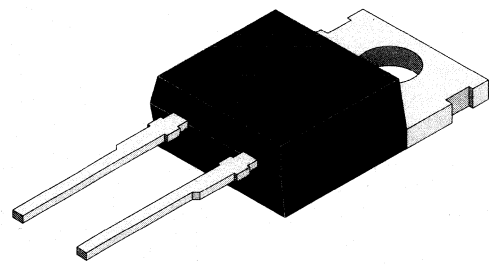

94 9537

Applications

Fast rectifiers in S.M.P.S
Freewheeling diodes and snubber diodes in motor control circuits

Absolute Maximum Ratings

$T_j = 25°C$

Parameter	Test Conditions	Type	Symbol	Value	Unit
Reverse voltage, repetitive peak reverse voltage		BYT08P/600A	$V_R=V_{RRM}$	600	V
		BYT08P/800A	$V_R=V_{RRM}$	800	V
Peak forward surge current	t_p=10ms		I_{FSM}	50	A
Repetitive peak forward current			I_{FRM}	16	A
Average forward current			I_{FAV}	8	A
Junction temperature			T_j	150	°C
Storage temperature range			T_{stg}	–40...+150	°C

Maximum Thermal Resistance

$T_j = 25°C$

Parameter	Test Conditions	Symbol	Value	Unit
Junction case		R_{thJC}	2.0	K/W
Junction ambient		R_{thJA}	85	K/W

Characteristics

$T_j = 25°C$

Parameter	Test Conditions	Type	Symbol	Min	Typ	Max	Unit
Forward voltage	I_F=8A		V_F			1.9	V
	I_F=8A, T_j=100°C		V_F			1.8	V
Reverse current	V_R=V_{RRM}		I_R			35	µA
	V_R=V_{RRM}, T_j=100°C		I_R			2	mA
Forward recovery time	I_F=8A; $di_F/dt \leqq 50A/\mu s$		t_{fr}		350		ns
Turn on transient peak voltage			V_{FP}			4,5	V
Reverse recovery characteristics, see Fig. 3	I_F=8A, $di_F/dt \leqq -32A/\mu s$, V_{Batt}=200V, T_j=100°C		I_{RM}			4	A
			t_{IRM}			160	ns
Reverse recovery time	I_F=8A, $di_F/dt \leqq -32A/\mu s$, V_{Batt}=200V, T_j=100°C i_R=0.25xI_{RM}		t_{rr}		100		ns
Reverse recovery time	I_F=0.5A, I_R=1A, i_R=0.25A		t_{rr}			50	ns
Reverse recovery current	I_F=1A, $di_F/dt \leqq -50A/\mu s$, V_{Batt}=200V		I_{RM}		1.7		A
Reverse recovery time	I_F=1A, $di_F/dt \leqq -50A/\mu s$, V_{Batt}=200V, i_R=0.25xI_{RM}		t_{rr}		75		ns

Typical Characteristics (T_j = 25°C unless otherwise specified)

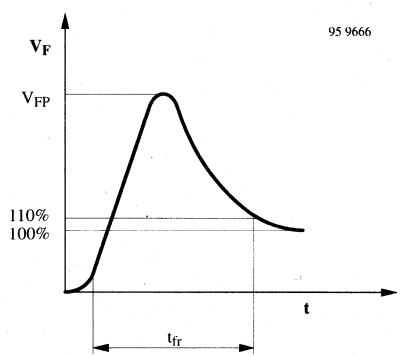

Figure 1. Turn on transient peak voltage

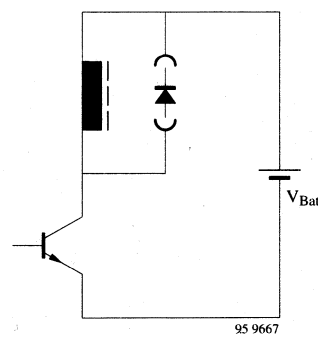

Figure 2. Test circuit

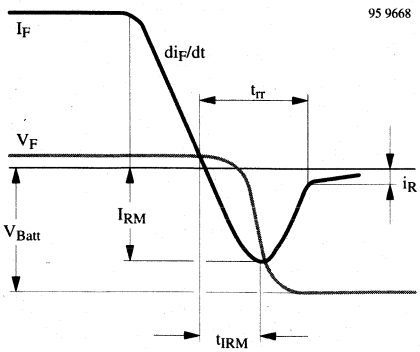

Figure 3. Turn off switching characteristic

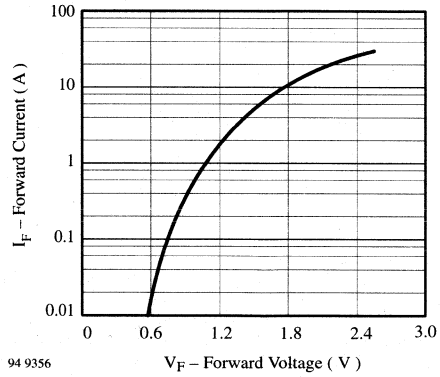

Figure 6. Forward Current vs. Forward Voltage

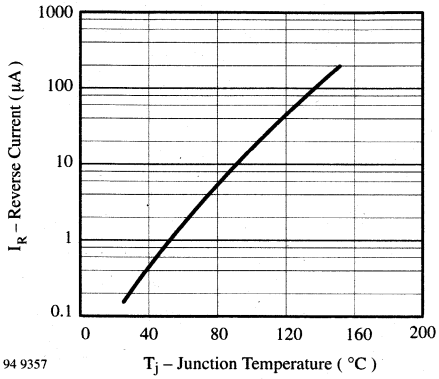

Figure 4. Reverse Current vs. Junction Temperature

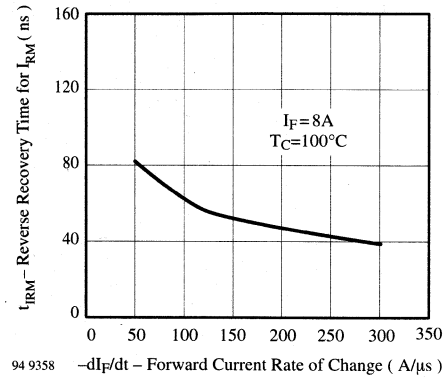

Figure 7. Reverse Recovery Time for IRM vs. Forward Current Rate of Change

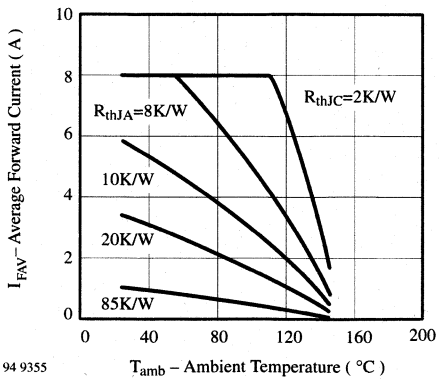

Figure 5. Average Forward Current vs. Ambient Temperature

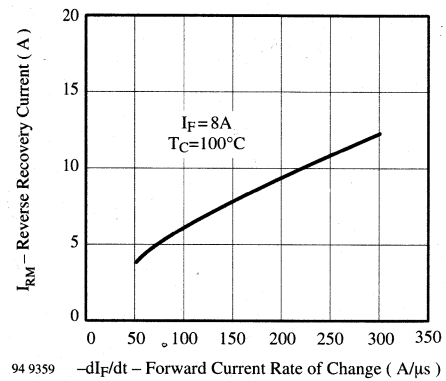

Figure 8. Reverse Recovery Current vs. Forward Current Rate of Change

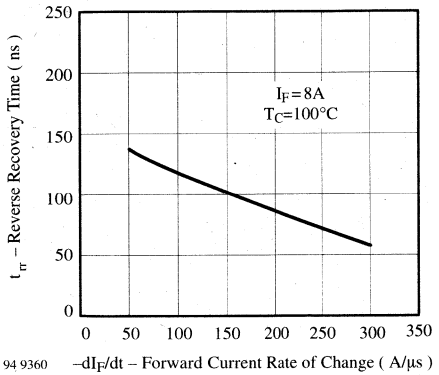

Figure 9. Reverse Recovery Time vs. Forward Current Rate of Change

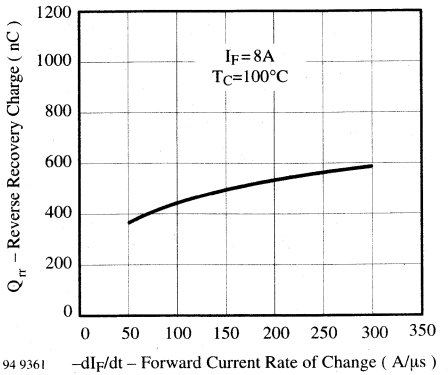

Figure 10. Reverse Recovery Charge vs. Forward Current Rate of Change

Dimensions in mm

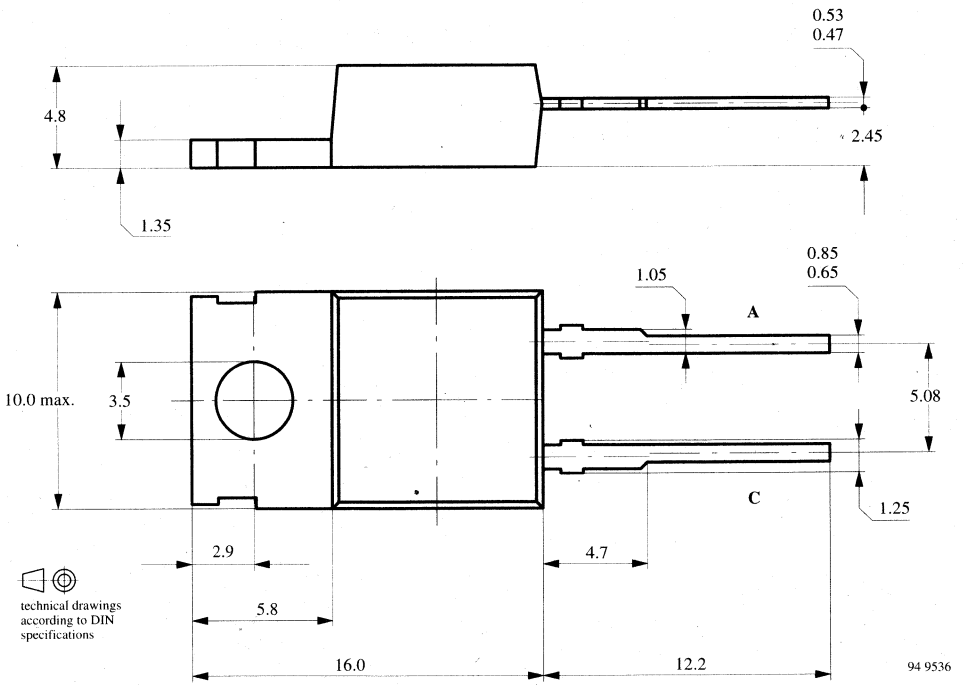

Cathode connected with metallic surface , Plastic Case DO 220 , Weight max.: 2.5 g

BYT08P/1000A

Fast Recovery Silicon Power Rectifier

Features

- Multiple diffusion
- Mesa glass passivated
- Low switch on power losses
- Good soft recovery behaviour
- Fast forward recovery time
- Low reverse current
- Very low turn on transient peak voltage
- Very good reverse current stability at high temperature
- Low thermal resistance

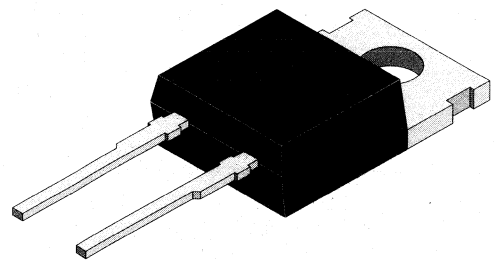

94 9537

Applications

Fast rectifiers in S.M.P.S
Freewheeling diodes and snubber diodes in motor control circuits

Absolute Maximum Ratings

$T_j = 25°C$

Parameter	Test Conditions	Type	Symbol	Value	Unit
Reverse voltage, repetitive peak reverse voltage			$V_R=V_{RRM}$	1000	V
Peak forward surge current	t_p=10ms		I_{FSM}	50	A
Repetitive peak forward current			I_{FRM}	16	A
Average forward current			I_{FAV}	8	A
Junction temperature			T_j	150	°C
Storage temperature range			T_{stg}	–40...+150	°C

Maximum Thermal Resistance

$T_j = 25°C$

Parameter	Test Conditions	Symbol	Value	Unit
Junction case		R_{thJC}	2.0	K/W
Junction ambient		R_{thJA}	85	K/W

Characteristics

$T_j = 25°C$

Parameter	Test Conditions	Type	Symbol	Min	Typ	Max	Unit
Forward voltage	I_F=8A		V_F			1.9	V
	I_F=8A, T_j=100°C		V_F			1.8	V
Reverse current	V_R=V_{RRM}		I_R			35	µA
	V_R=V_{RRM}, T_j=100°C		I_R			2.5	mA
Forward recovery time	I_F=8A, $di_F/dt \leqq 50A/\mu s$		t_{fr}		350		ns
Turn on transient peak voltage			V_{FP}			4.5	V
Reverse recovery characteristics, see Fig. 3	I_F=8A, $di_F/dt \leqq -32A/\mu s$, V_{Batt}=200V, T_j=100°C		I_{RM}			5.5	A
			t_{IRM}		80	200	ns
Reverse recovery time	I_F=8A, $di_F/dt \leqq -32A/\mu s$, V_{Batt}=200V, T_j=100°C i_R=0.25xI_{RM}		t_{rr}		120		ns
Reverse recovery time	I_F=0.5A, I_R=1A, i_R=0.25A		t_{rr}			65	ns

Typical Characteristics (T_j = 25°C unless otherwise specified)

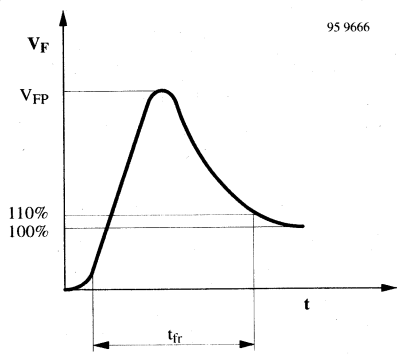

Figure 1. Turn on transient peak voltage

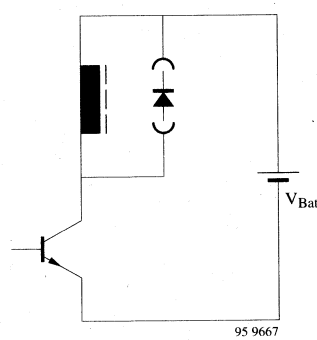

Figure 2. Test circuit

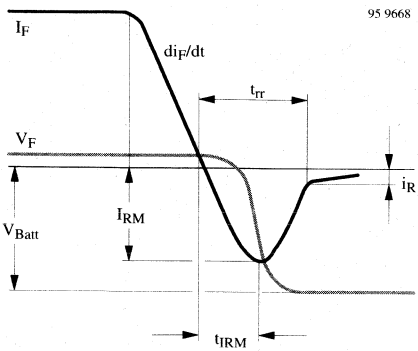

Figure 3. Turn off switching characteristic

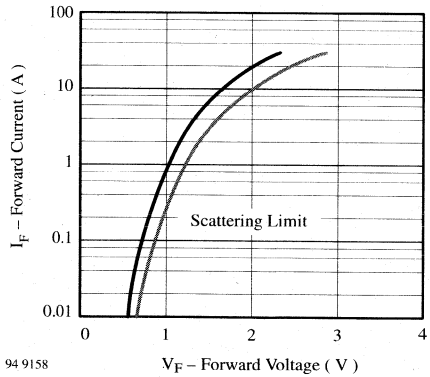

Figure 6. Forward Current vs. Forward Voltage

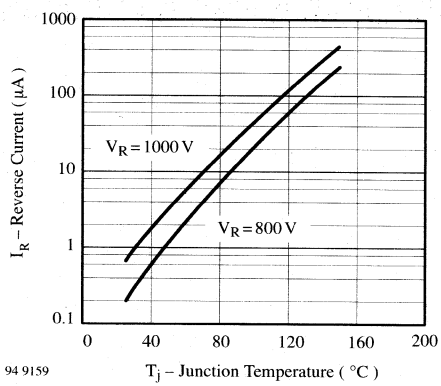

Figure 4. Reverse Current vs. Junction Temperature

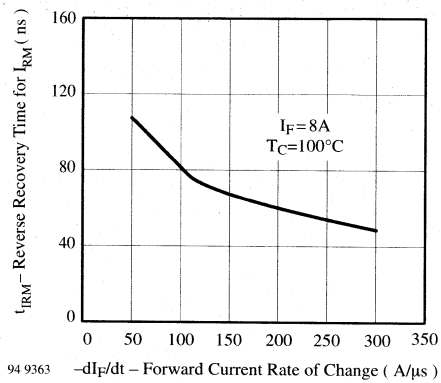

Figure 7. Reverse Recovery Time for IRM vs. Forward Current Rate of Change

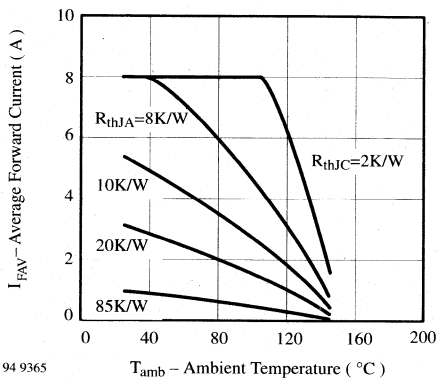

Figure 5. Average Forward Current vs. Ambient Temperature

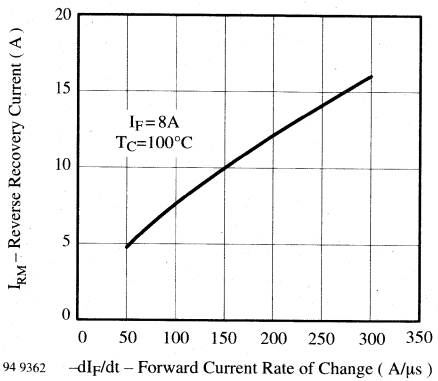

Figure 8. Reverse Recovery Current vs. Forward Current Rate of Change

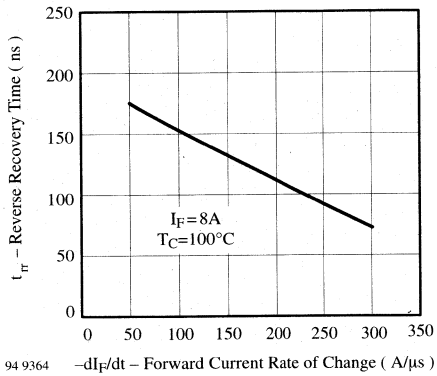

Figure 9. Reverse Recovery Time vs. Forward Current Rate of Change

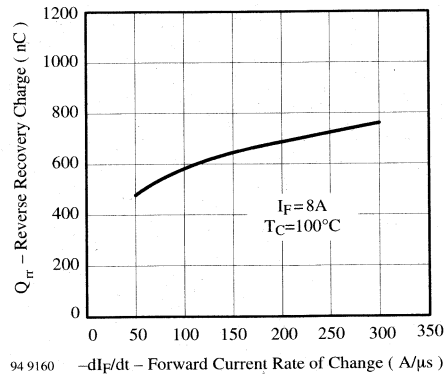

Figure 10. Reverse Recovery Charge vs. Forward Current Rate of Change

Dimensions in mm

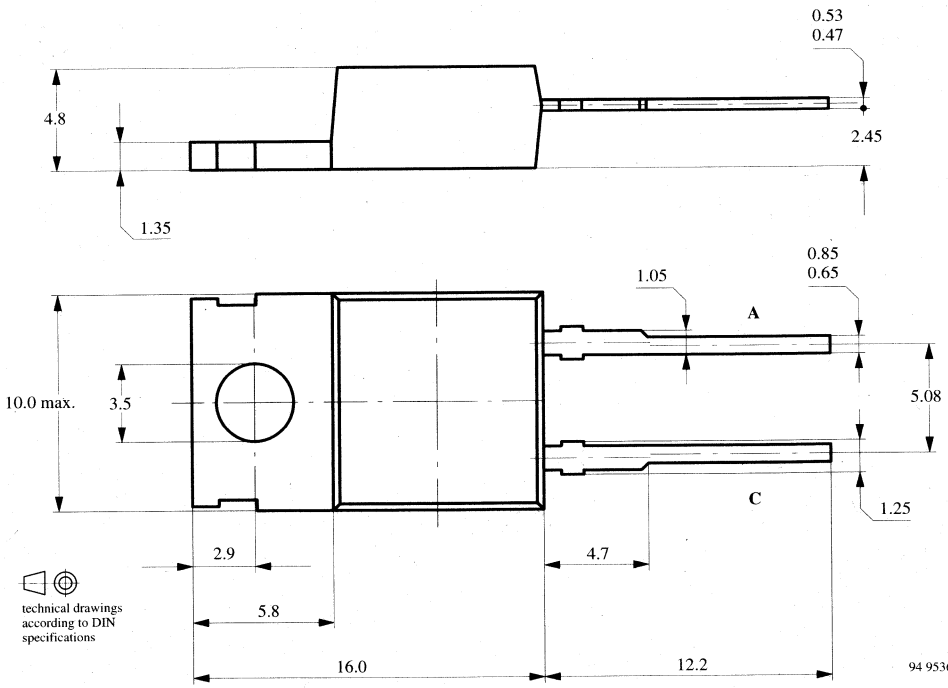

Cathode connected with metallic surface , Plastic Case DO 220 , Weight max.: 2.5 g

BYT12P/600A/800A

Fast Recovery Silicon Power Rectifier

Features

- Multiple diffusion
- Mesa glass passivated
- Low switch on power losses
- Good soft recovery behaviour
- Fast forward recovery time
- Fast reverse recovery time
- Low reverse current
- Very low turn on transient peak voltage
- Very good reverse current stability at high temperature
- Low thermal resistance

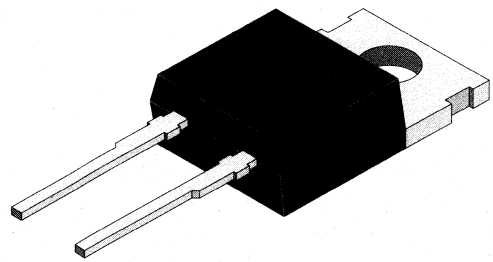

94 9537

Applications

Fast rectifiers in S.M.P.S
Freewheeling diodes and snubber diodes in motor control circuits

Absolute Maximum Ratings

$T_j = 25°C$

Parameter	Test Conditions	Type	Symbol	Value	Unit
Reverse voltage, repetitive peak reverse voltage		BYT12P/600A	$V_R=V_{RRM}$	600	V
Reverse voltage		BYT12P/800A	$V_R=V_{RRM}$	800	V
Peak forward surge current	t_p=10ms		I_{FSM}	150	A
Repetitive peak forward current			I_{FRM}	25	A
Average forward current			I_{FAV}	12	A
Junction temperature			T_j	150	°C
Storage temperature range			T_{stg}	–40...+150	°C

Maximum Thermal Resistance

$T_j = 25°C$

Parameter	Test Conditions	Symbol	Value	Unit
Junction case		R_{thJC}	2.0	K/W
Junction ambient		R_{thJA}	85	K/W

Characteristics

$T_j = 25°C$

Parameter	Test Conditions	Type	Symbol	Min	Typ	Max	Unit
Forward voltage	I_F=12A		V_F			1.9	V
	I_F=12A, T_j=100°C		V_F			1.8	V
Reverse current	V_R=V_{RRM}		I_R			50	µA
	V_R=V_{RRM}, T_j=100°C		I_R			2.5	mA
Forward recovery time	I_F=12A, $di_F/dt \leqq 50A/\mu s$		t_{fr}		350		ns
Turn on transient peak voltage			V_{FP}			4.5	V
Reverse recovery characteristics, see Fig. 3	I_F=12A, $di_F/dt \leqq -50A/\mu s$, V_{Batt}=200V, T_j=100°C		I_{RM}			6	A
			t_{IRM}			160	ns
Reverse recovery time	I_F=12A, $di_F/dt \leqq -50A/\mu s$, V_{Batt}=200V, T_j=100°C i_R=0.25xI_{RM}		t_{rr}		180		ns
Reverse recovery time	I_F=0.5A, I_R=1A, i_R=0.25A		t_{rr}			50	ns

Typical Characteristics (T_j = 25°C unless otherwise specified)

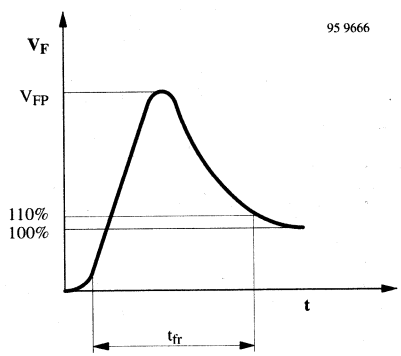

Figure 1. Turn on transient peak voltage

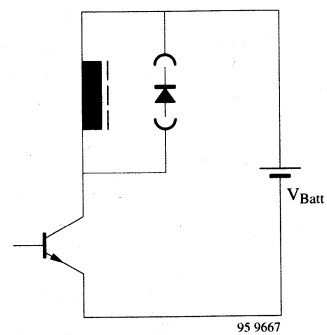

Figure 2. Test circuit

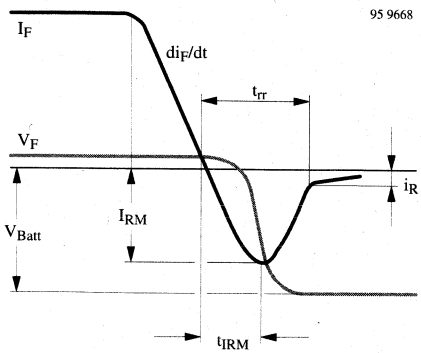

Figure 3. Turn off switching characteristic

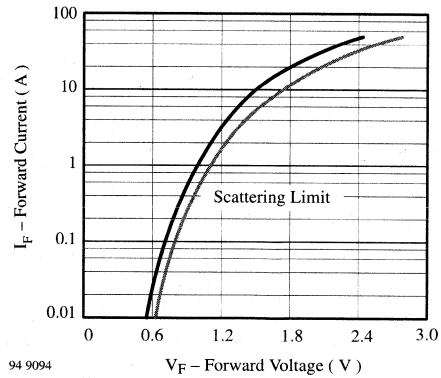

Figure 6. Forward Current vs. Forward Voltage

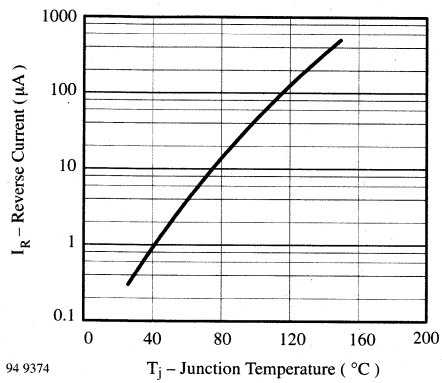

Figure 4. Reverse Current vs. Junction Temperature

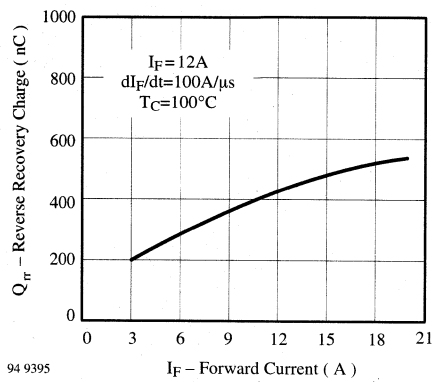

Figure 7. Reverse Recovery Charge vs. Forward Current

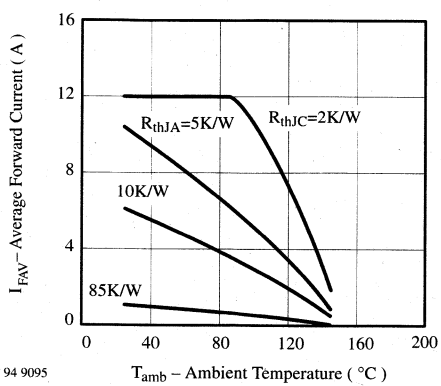

Figure 5. Average Forward Current vs. Ambient Temperature

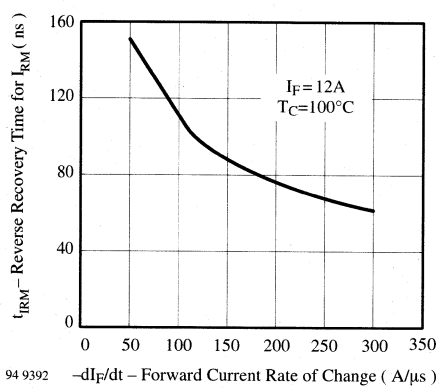

Figure 8. Reverse Recovery Time for IRM vs. Forward Current Rate of Change

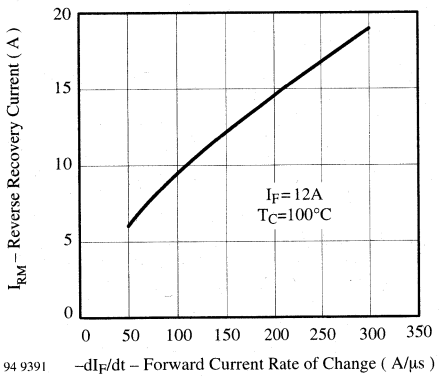

Figure 9. Reverse Recovery Current vs. Forward Current Rate of Change

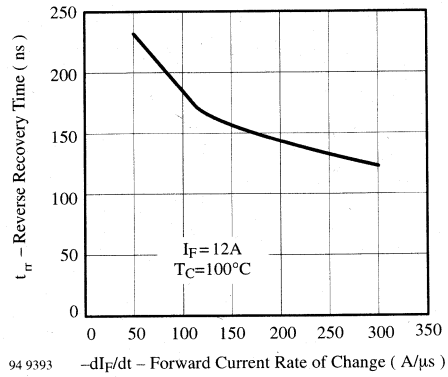

Figure 10. Reverse Recovery Time vs. Forward Current Rate of Change

Dimensions in mm

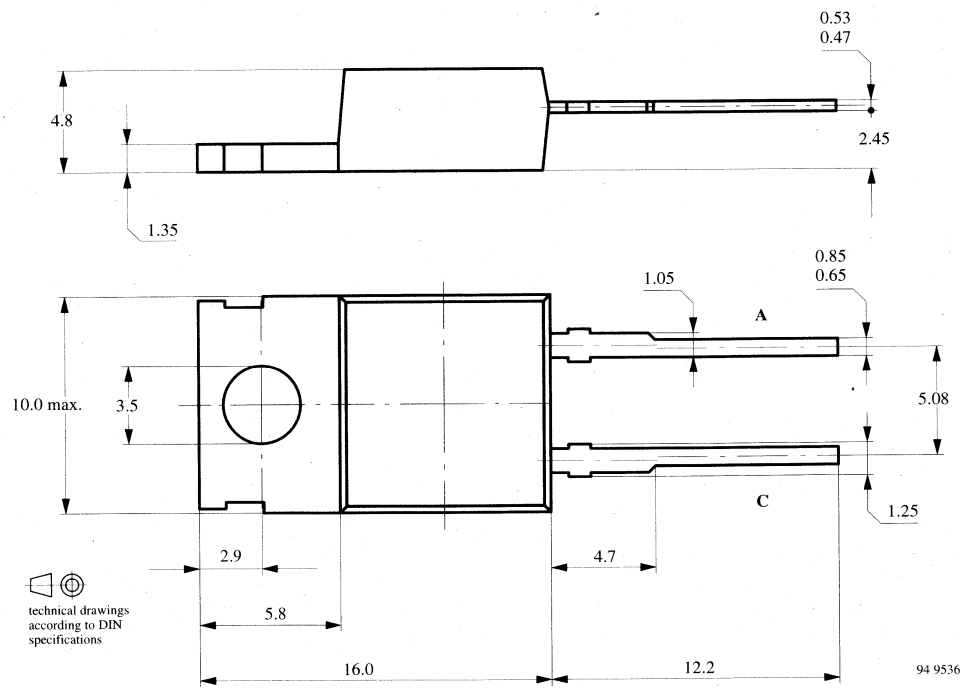

Cathode connected with metallic surface , Plastic Case DO 220 , Weight max.: 2.5 g

BYT12P/1000A

Fast Recovery Silicon Power Rectifier

Features

- Multiple diffusion
- Mesa glass passivated
- Low switch on power losses
- Good soft recovery behaviour
- Fast forward recovery time
- Fast reverse recovery time
- Low reverse current
- Very low turn on transient peak voltage
- Very good reverse current stability at high temperature
- Low thermal resistance

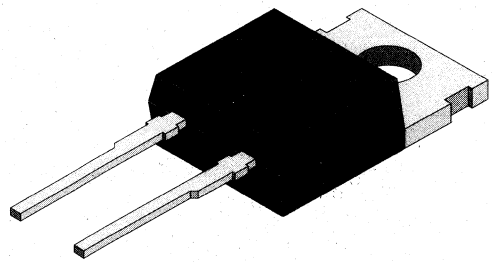

94 9537

Applications

Fast switched mode power supplies
Freewheeling diodes and snubber diodes in motor control circuits

Absolute Maximum Ratings

$T_j = 25°C$

Parameter	Test Conditions	Type	Symbol	Value	Unit
Reverse voltage, repetitive peak reverse voltage			$V_R=V_{RRM}$	1000	V
Peak forward surge current	t_p=10ms		I_{FSM}	150	A
Repetitive peak forward current			I_{FRM}	25	A
Average forward current			I_{FAV}	12	A
Junction temperature			T_j	150	°C
Storage temperature range			T_{stg}	–40...+150	°C

Maximum Thermal Resistance

$T_j = 25°C$

Parameter	Test Conditions	Symbol	Value	Unit
Junction case		R_{thJC}	2.0	K/W
Junction ambient		R_{thJA}	85	K/W

Characteristics

$T_j = 25°C$

Parameter	Test Conditions	Type	Symbol	Min	Typ	Max	Unit
Forward voltage	I_F=12A		V_F			1.9	V
	I_F=12A, T_j=100°C		V_F			1.8	V
Reverse current	V_R=V_{RRM}		I_R			50	µA
	V_R=V_{RRM}, T_j=100°C		I_R			2.5	mA
Forward recovery time	I_F=12A, $di_F/dt \leqq 50A/\mu s$		t_{fr}		350		ns
Turn on transient peak voltage			V_{FP}			4.5	V
Reverse recovery characteristics, see Fig. 3	I_F=12A, $di_F/dt \leqq -50A/\mu s$, V_{Batt}=200V, T_j=100°C		I_{RM}			7.8	A
			t_{IRM}			200	ns
Reverse recovery time	I_F=12A, $di_F/dt \leqq -50A/\mu s$, V_{Batt}=200V, T_j=100°C i_R=0.25xI_{RM}		t_{rr}		220		ns
Reverse recovery time	I_F=0.5A, I_R=1A, i_R=0.25A		t_{rr}			65	ns

Typical Characteristics (T_j = 25°C unless otherwise specified)

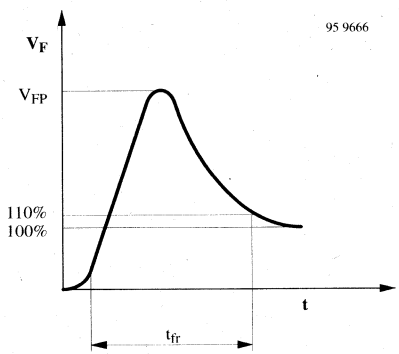

Figure 1. Turn on transient peak voltage

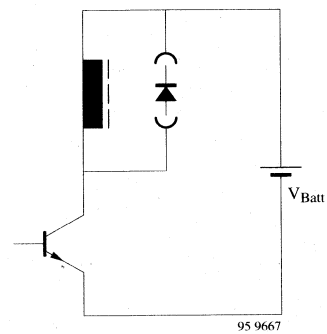

Figure 2. Test circuit

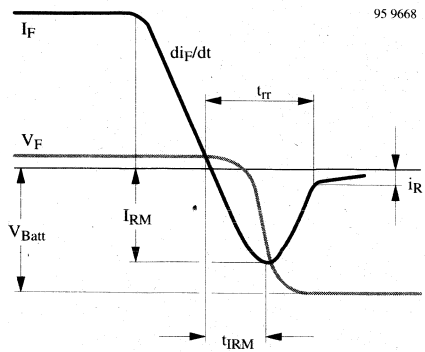

Figure 3. Turn off switching characteristic

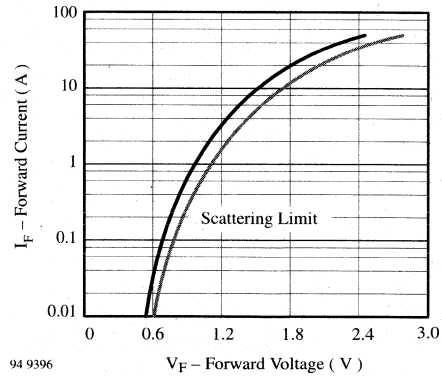

Figure 6. Forward Current vs. Forward Voltage

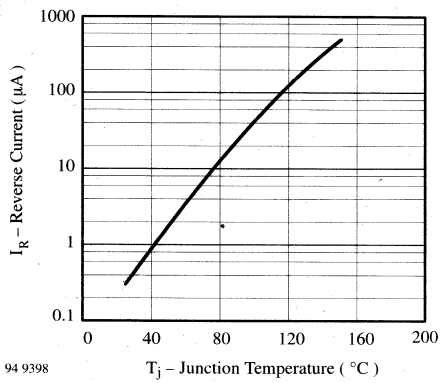

Figure 4. Reverse Current vs. Junction Temperature

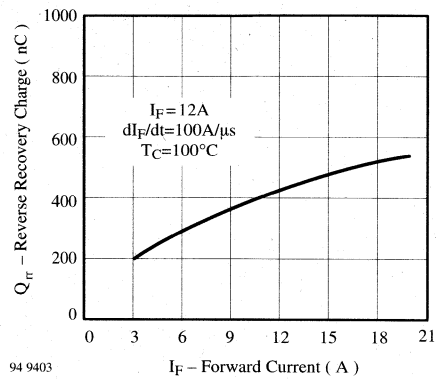

Figure 7. Reverse Recovery Charge vs. Forward Current

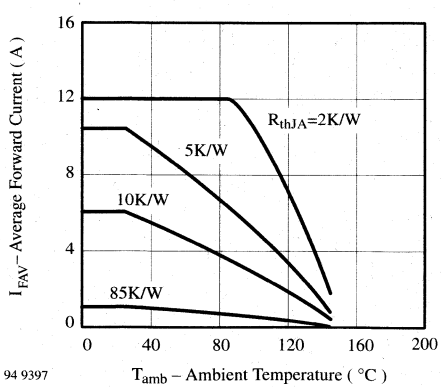

Figure 5. Average Forward Current vs. Ambient Temperature

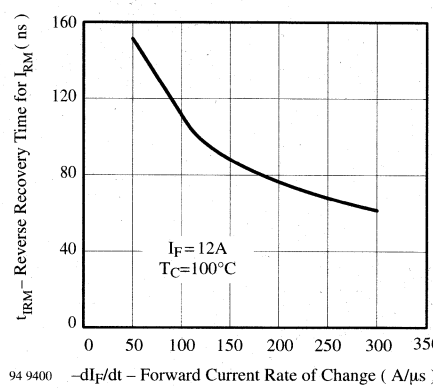

Figure 8. Reverse Recovery Time for IRM vs. Forward Current Rate of Change

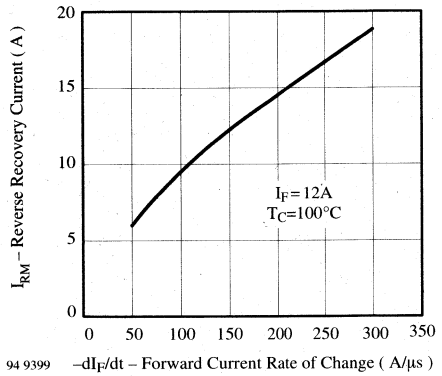

Figure 9. Reverse Recovery Current vs. Forward Current Rate of Change

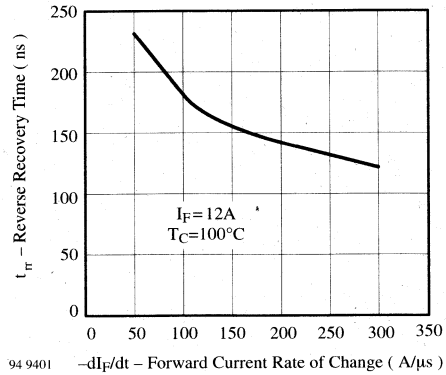

Figure 10. Reverse Recovery Time vs. Forward Current Rate of Change

Dimensions in mm

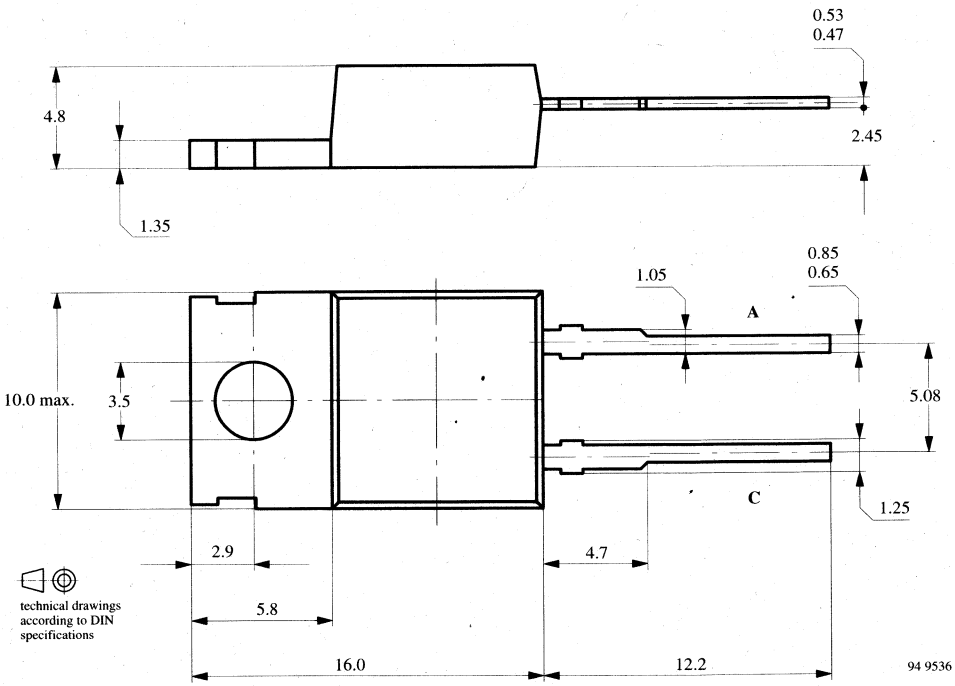

Cathode connected with metallic surface , Plastic Case DO 220 , Weight max.: 2.5 g

Fast Soft Recovery Rectifier

Features

- Controlled avalanche characteristics
- Miniature axial leaded
- Glass passivated
- Hermetically sealed glass envelope
- Low reverse current
- High reverse voltage

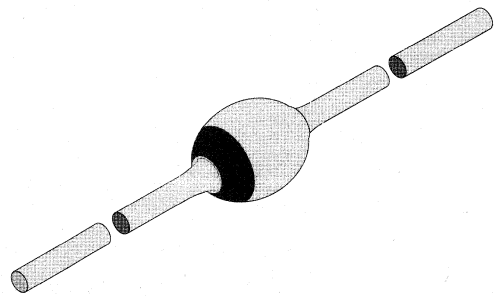

95 10526

Applications

General purpose rectifier

Absolute Maximum Ratings

$T_j = 25°C$

Parameter	Test Conditions	Type	Symbol	Value	Unit
Repetitive peak reverse voltage		BYT41A	V_{RRM}	50	V
		BYT41B	V_{RRM}	100	V
		BYT41D	V_{RRM}	200	V
		BYT41G	V_{RRM}	400	V
		BYT41J	V_{RRM}	600	V
		BYT41K	V_{RRM}	800	V
		BYT41M	V_{RRM}	1000	V
Reverse voltage		BYT41A	V_R	50	V
		BYT41B	V_R	100	V
		BYT41D	V_R	200	V
		BYT41G	V_R	400	V
		BYT41J	V_R	600	V
		BYT41K	V_R	800	V
		BYT41M	V_R	1000	V
Peak forward surge current	t_p=8.3 ms, half sinewave		I_{FSM}	30	A
Average forward current	Lead length l = 10 mm, $T_L = 25°C$		I_{FAV}	1.25	A
Non repetitive reverse avalanche energy	$I_{(BR)R}$=1A, inductive load		E_R	10	mJ
Junction temperature			T_j	175	°C
Storage temperature range			T_{stg}	–55...+175	°C

Maximum Thermal Resistance

$T_j = 25°C$

Parameter	Test Conditions	Symbol	Value	Unit
Junction ambient	Lead length l = 10 mm, T_L = constant	R_{thJA}	60	K/W
	on PC board with spacing 25mm	R_{thJA}	110	K/W

Characteristics

$T_j = 25°C$

Parameter	Test Conditions	Type	Symbol	Min	Typ	Max	Unit
Forward voltage	I_F = 1 A	BYT41A	V_F			1.1	V
		BYT41B	V_F			1.1	V
		BYT41D	V_F			1.1	V
		BYT41G	V_F			1.1	V
		BYT41J	V_F			1.1	V
		BYT41K	V_F			1.1	V
		BYT41M	V_F			1.1	V
Reverse current	$V_R=V_{RRM}$		I_R			5	µA
	$V_R=V_{RRM}$, T_j=150°C		I_R			150	µA
Reverse breakdown voltage	I_R=100µA	BYT41A	$V_{(BR)R}$	50			V
		BYT41B	$V_{(BR)R}$	100			V
		BYT41D	$V_{(BR)R}$	200			V
		BYT41G	$V_{(BR)R}$	400			V
		BYT41J	$V_{(BR)R}$	600			V
		BYT41K	$V_{(BR)R}$	800			V
		BYT41M	$V_{(BR)R}$	1000			V
Reverse recovery time	I_F=0.5A, I_R=1A, i_R=0.25A	BYT41A	t_{rr}			2	µs
		BYT41B	t_{rr}			2	µs
		BYT41D	t_{rr}			2	µs
		BYT41G	t_{rr}			2	µs
		BYT41J	t_{rr}			2	µs
		BYT41K	t_{rr}			2	µs
		BYT41M	t_{rr}			2	µs

Typical Characteristics (T_j = 25°C unless otherwise specified)

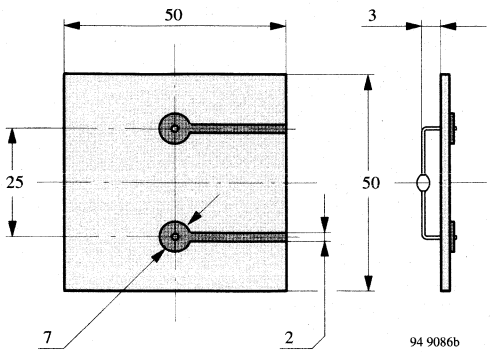

Figure 1. Epoxy glass hard tissue, board thickness 1.5 mm, $R_{thJA} \leqq 110$ K/W

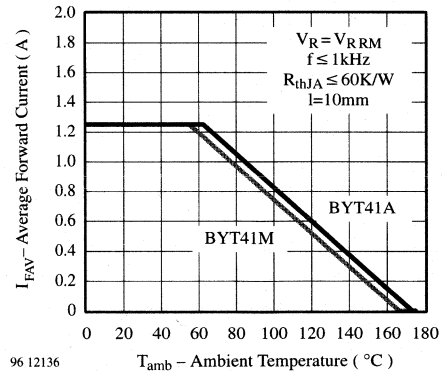

Figure 4. Average Forward Current vs. Ambient Temperature

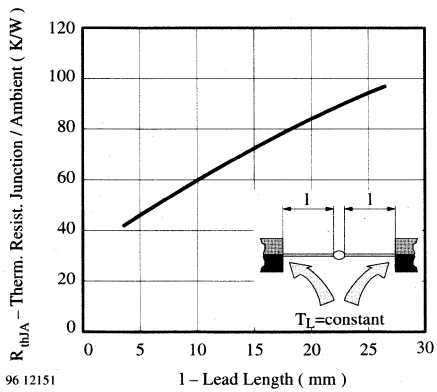

Figure 2. Thermal Resistance vs. Lead Length

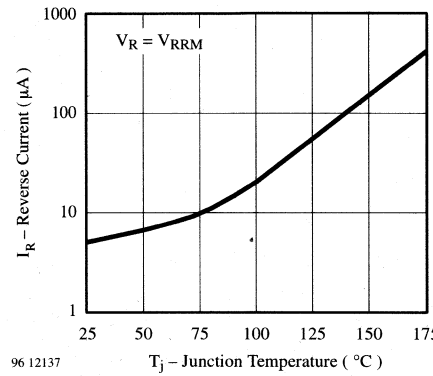

Figure 5. Reverse Current vs. Junction Temperature

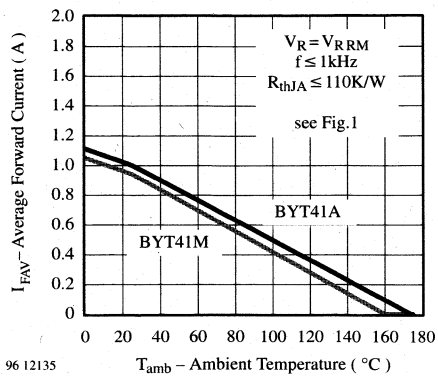

Figure 3. Average Forward Current vs. Ambient Temperature

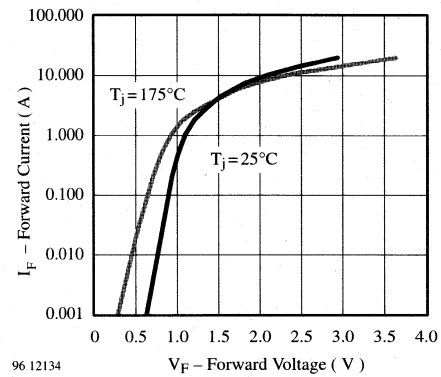

Figure 6. Forward Current vs. Forward Voltage

Dimensions in mm

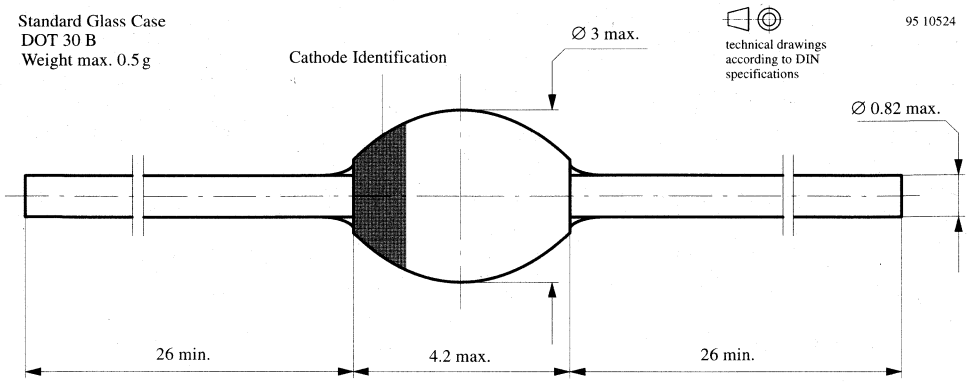

Fast Soft Recovery Rectifier

Features

- Miniature axial leaded
- Glass passivated
- Hermetically sealed glass envelope
- Low reverse current
- High reverse voltage

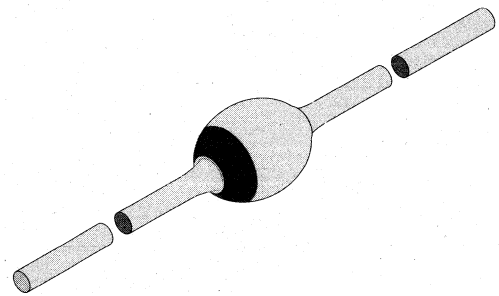

95 10526

Applications

TV and monitor
SMPS
Electronic ballast

Absolute Maximum Ratings

$T_j = 25°C$

Parameter	Test Conditions	Type	Symbol	Value	Unit
Repetitive peak reverse voltage		BYT42A	V_{RRM}	50	V
		BYT42B	V_{RRM}	100	V
		BYT42D	V_{RRM}	200	V
		BYT42G	V_{RRM}	400	V
		BYT42J	V_{RRM}	600	V
		BYT42K	V_{RRM}	800	V
		BYT42M	V_{RRM}	1000	V
Reverse voltage		BYT42A	V_R	50	V
		BYT42B	V_R	100	V
		BYT42D	V_R	200	V
		BYT42G	V_R	400	V
		BYT42J	V_R	600	V
		BYT42K	V_R	800	V
		BYT42M	V_R	1000	V
Peak forward surge current	t_p=8.3 ms, half sinewave		I_{FSM}	30	A
Average forward current	Lead length l = 10 mm, $T_L = 25°C$		I_{FAV}	1.25	A
Junction temperature			T_j	175	°C
Storage temperature range			T_{stg}	–55...+175	°C

Maximum Thermal Resistance

$T_j = 25°C$

Parameter	Test Conditions	Symbol	Value	Unit
Junction ambient	Lead length l = 10 mm, T_L = constant	R_{thJA}	60	K/W
	on PC board with spacing 25mm	R_{thJA}	110	K/W

Characteristics

$T_j = 25°C$

Parameter	Test Conditions	Type	Symbol	Min	Typ	Max	Unit
Forward voltage	I_F = 1 A	BYT42A	V_F			1.4	V
		BYT42B	V_F			1.4	V
		BYT42D	V_F			1.4	V
		BYT42G	V_F			1.4	V
		BYT42J	V_F			1.4	V
		BYT42K	V_F			1.4	V
		BYT42M	V_F			1.4	V
Reverse current	$V_R=V_{RRM}$		I_R			5	µA
	$V_R=V_{RRM}$, T_j=150°C		I_R			150	µA
Reverse breakdown voltage	I_R=100µA	BYT42A	$V_{(BR)R}$	50			V
		BYT42B	$V_{(BR)R}$	100			V
		BYT42D	$V_{(BR)R}$	200			V
		BYT42G	$V_{(BR)R}$	400			V
		BYT42J	$V_{(BR)R}$	600			V
		BYT42K	$V_{(BR)R}$	800			V
		BYT42M	$V_{(BR)R}$	1000			V
Reverse recovery time	I_F=0.5A, I_R=1A, i_R=0.25A	BYT42A	t_{rr}			150	ns
		BYT42B	t_{rr}			150	ns
		BYT42D	t_{rr}			150	ns
		BYT42G	t_{rr}			150	ns
		BYT42J	t_{rr}			150	ns
		BYT42K	t_{rr}			200	ns
		BYT42M	t_{rr}			200	ns

Typical Characteristics (T_j = 25°C unless otherwise specified)

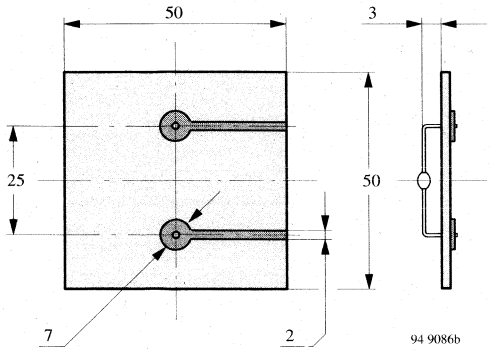

Figure 1. Epoxy glass hard tissue, board thickness 1.5 mm, $R_{thJA} \leqq 110$ K/W

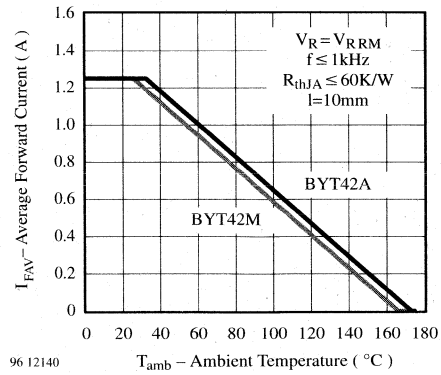

Figure 4. Average Forward Current vs. Ambient Temperature

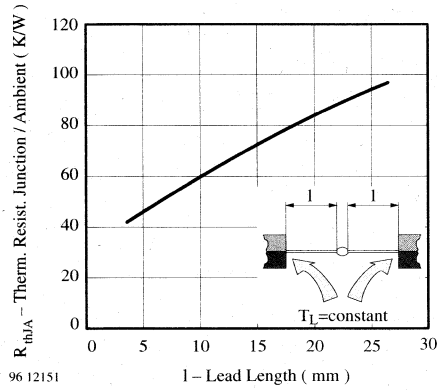

Figure 2. Thermal Resistance vs. Lead Length

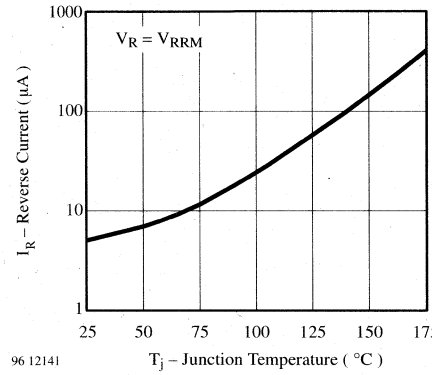

Figure 5. Reverse Current vs. Junction Temperature

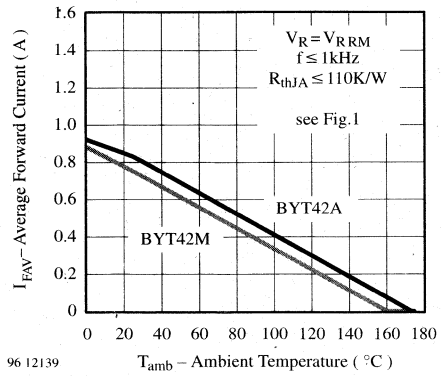

Figure 3. Average Forward Current vs. Ambient Temperature

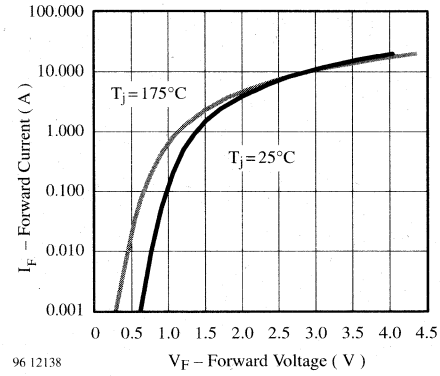

Figure 6. Forward Current vs. Forward Voltage

Dimensions in mm

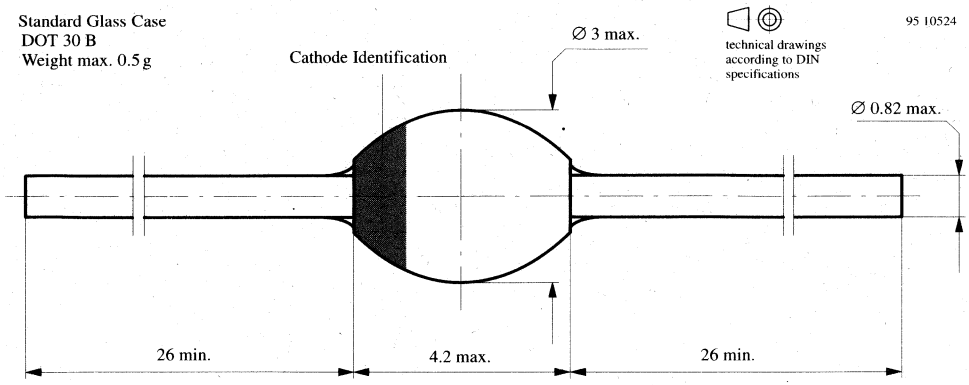

Very Fast Soft Recovery Rectifier

Features

- Miniature axial leaded
- Glass passivated
- Hermetically sealed glass envelope
- Low reverse current
- High reverse voltage

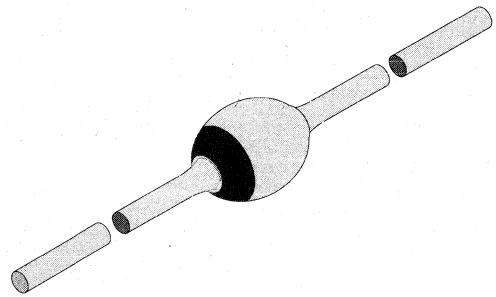

95 10526

Applications

TV and monitor
SMPS
Electronic ballast

Absolute Maximum Ratings

$T_j = 25°C$

Parameter	Test Conditions	Type	Symbol	Value	Unit
Repetitive peak reverse voltage		BYT43A	V_{RRM}	50	V
		BYT43B	V_{RRM}	100	V
		BYT43D	V_{RRM}	200	V
		BYT43G	V_{RRM}	400	V
		BYT43J	V_{RRM}	600	V
		BYT43K	V_{RRM}	800	V
		BYT43M	V_{RRM}	1000	V
Reverse voltage		BYT43A	V_R	50	V
		BYT43B	V_R	100	V
		BYT43D	V_R	200	V
		BYT43G	V_R	400	V
		BYT43J	V_R	600	V
		BYT43K	V_R	800	V
		BYT43M	V_R	1000	V
Peak forward surge current	t_p=8.3 ms, half sinewave		I_{FSM}	30	A
Average forward current	Lead length l = 10 mm, $T_L = 25°C$		I_{FAV}	1	A
Junction temperature			T_j	175	°C
Storage temperature range			T_{stg}	–55...+175	°C

Maximum Thermal Resistance

$T_j = 25°C$

Parameter	Test Conditions	Symbol	Value	Unit
Junction ambient	Lead length l = 10 mm, T_L = constant	R_{thJA}	60	K/W
	on PC board with spacing 25mm	R_{thJA}	110	K/W

Characteristics

$T_j = 25°C$

Parameter	Test Conditions	Type	Symbol	Min	Typ	Max	Unit
Forward voltage	I_F = 1 A	BYT43A	V_F			1.6	V
		BYT43B	V_F			1.6	V
		BYT43D	V_F			1.6	V
		BYT43G	V_F			1.6	V
		BYT43J	V_F			1.6	V
		BYT43K	V_F			2	V
		BYT43M	V_F			2	V
Reverse current	$V_R=V_{RRM}$		I_R			5	µA
	$V_R=V_{RRM}$, T_j=150°C		I_R			150	µA
Reverse breakdown voltage	I_R=100µA	BYT43A	$V_{(BR)R}$	50			V
		BYT43B	$V_{(BR)R}$	100			V
		BYT43D	$V_{(BR)R}$	200			V
		BYT43G	$V_{(BR)R}$	400			V
		BYT43J	$V_{(BR)R}$	600			V
		BYT43K	$V_{(BR)R}$	800			V
		BYT43M	$V_{(BR)R}$	1000			V
Reverse recovery time	I_F=0.5A, I_R=1A, i_R=0.25A	BYT43A	t_{rr}			50	ns
		BYT43B	t_{rr}			50	ns
		BYT43D	t_{rr}			50	ns
		BYT43G	t_{rr}			50	ns
		BYT43J	t_{rr}			50	ns
		BYT43K	t_{rr}			75	ns
		BYT43M	t_{rr}			75	ns

Typical Characteristics (T_j = 25°C unless otherwise specified)

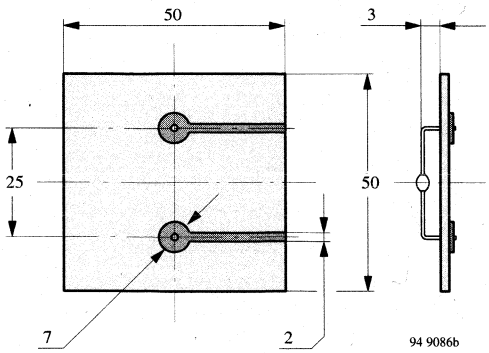

Figure 1. Epoxy glass hard tissue, board thickness 1.5 mm, $R_{thJA} \leqq 110$ K/W

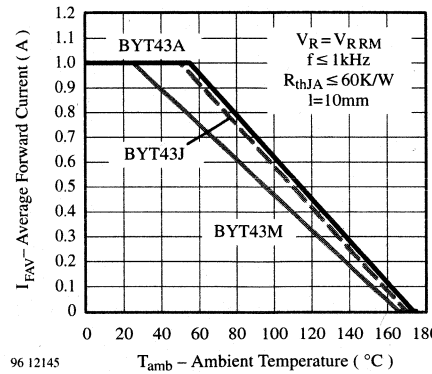

Figure 4. Average Forward Current vs. Ambient Temperature

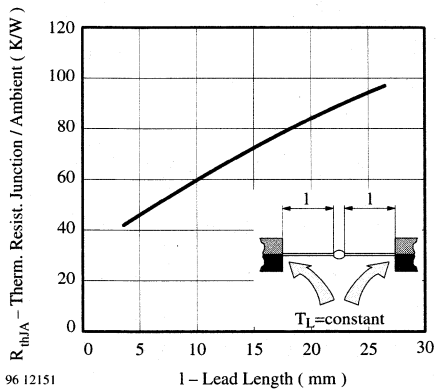

Figure 2. Thermal Resistance vs. Lead Length

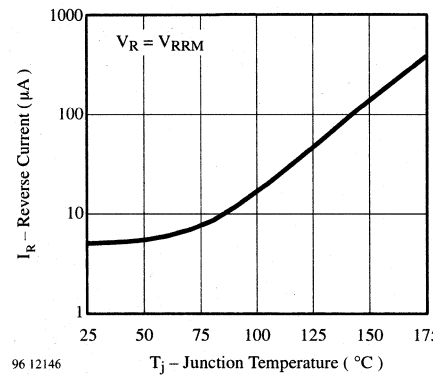

Figure 5. Reverse Current vs. Junction Temperature

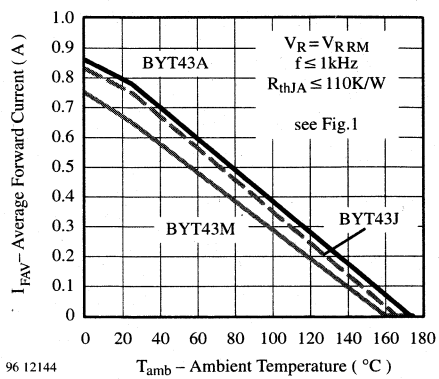

Figure 3. Average Forward Current vs. Ambient Temperature

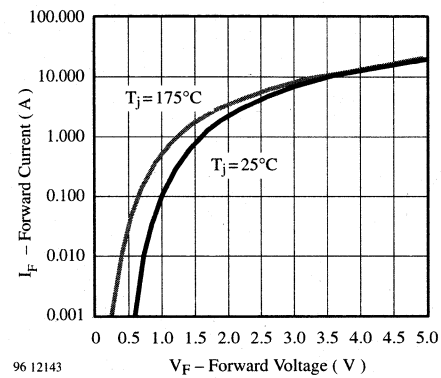

Figure 6. Forward Current vs. Forward Voltage

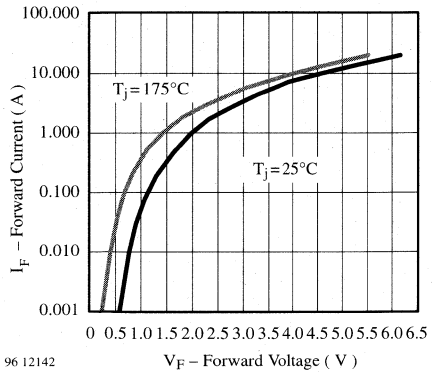

Figure 7. Forward Current vs. Forward Voltage

Dimensions in mm

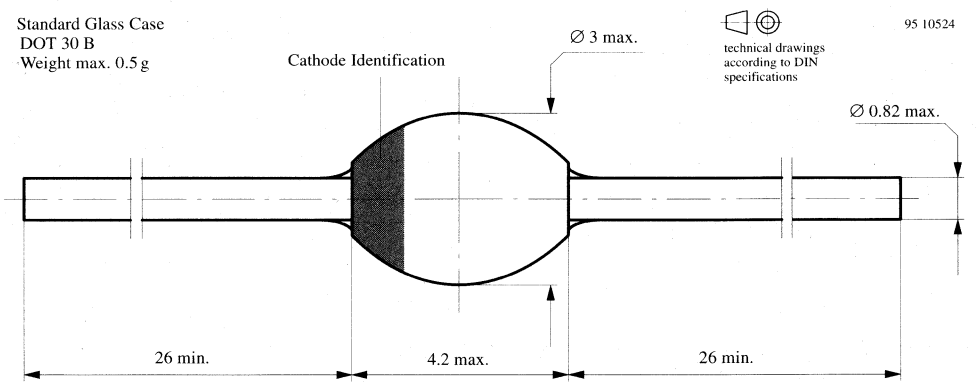

Super Fast Soft Recovery Rectifier

Features

- Miniature axial leaded
- Glass passivated
- Hermetically sealed glass envelope
- Low reverse current

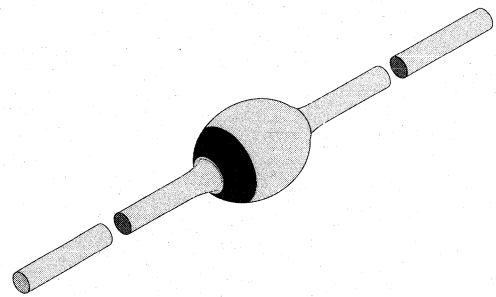

95 10526

Applications

High frequency circuits
Freewheeling diodes in SMPS

Absolute Maximum Ratings

$T_j = 25°C$

Parameter	Test Conditions	Type	Symbol	Value	Unit
Repetitive peak reverse voltage		BYT44A	V_{RRM}	50	V
		BYT44B	V_{RRM}	100	V
		BYT44C	V_{RRM}	150	V
		BYT44D	V_{RRM}	200	V
Reverse voltage		BYT44A	V_R	50	V
		BYT44B	V_R	100	V
		BYT44C	V_R	150	V
		BYT44D	V_R	200	V
Peak forward surge current	t_p=8.3 ms, half sinewave		I_{FSM}	30	A
Average forward current	Lead length l = 10 mm, T_L = 25°C		I_{FAV}	1.5	A
Junction temperature			T_j	175	°C
Storage temperature range			T_{stg}	–55...+175	°C

Maximum Thermal Resistance

$T_j = 25°C$

Parameter	Test Conditions	Symbol	Value	Unit
Junction ambient	Lead length l = 10 mm, T_L = constant	R_{thJA}	60	K/W
	on PC board with spacing 25mm	R_{thJA}	110	K/W

Characteristics

$T_j = 25°C$

Parameter	Test Conditions	Type	Symbol	Min	Typ	Max	Unit
Forward voltage	$I_F = 1$ A	BYT44A	V_F			1.1	V
		BYT44B	V_F			1.1	V
		BYT44C	V_F			1.1	V
		BYT44D	V_F			1.1	V
Reverse current	$V_R=V_{RRM}$		I_R			5	µA
	$V_R=V_{RRM}$, $T_j=150°C$		I_R			150	µA
Reverse breakdown voltage	$I_R=100µA$	BYT44A	$V_{(BR)R}$	50			V
		BYT44B	$V_{(BR)R}$	100			V
		BYT44C	$V_{(BR)R}$	150			V
		BYT44D	$V_{(BR)R}$	200			V
Reverse recovery time	$I_F=0.5A$, $I_R=1A$, $i_R=0.25A$	BYT44A	t_{rr}			25	ns
		BYT44B	t_{rr}			25	ns
		BYT44C	t_{rr}			25	ns
		BYT44D	t_{rr}			25	ns

Typical Characteristics (T_j = 25°C unless otherwise specified)

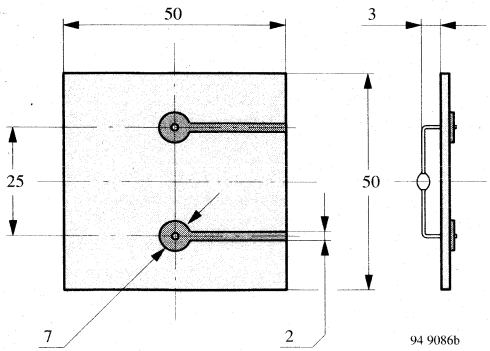

Figure 1. Epoxy glass hard tissue, board thickness 1.5 mm, $R_{thJA} \leqq 110$ K/W

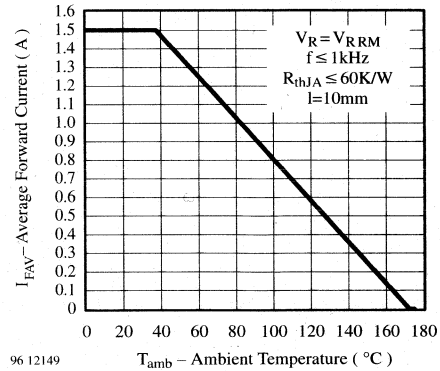

Figure 4. Average Forward Current vs. Ambient Temperature

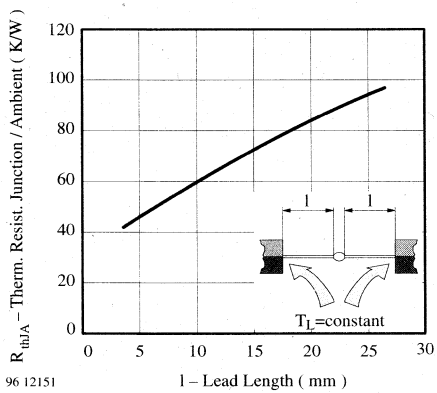

Figure 2. Thermal Resistance vs. Lead Length

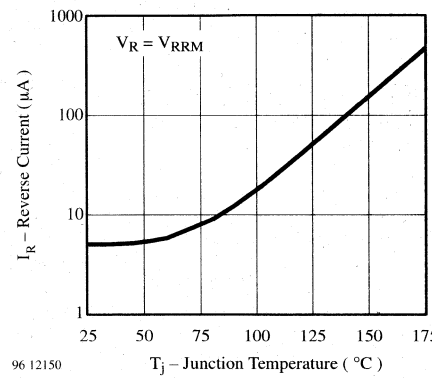

Figure 5. Reverse Current vs. Junction Temperature

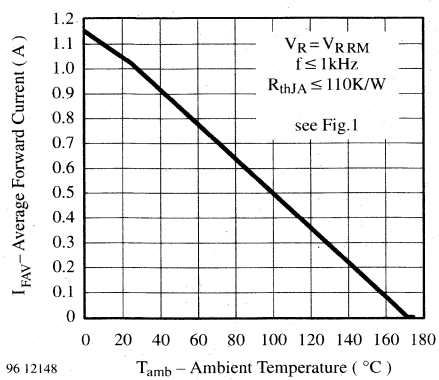

Figure 3. Average Forward Current vs. Ambient Temperature

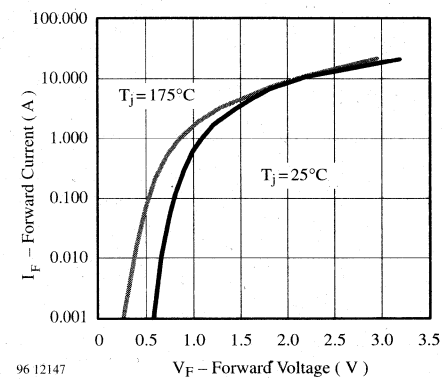

Figure 6. Forward Current vs. Forward Voltage

Dimensions in mm

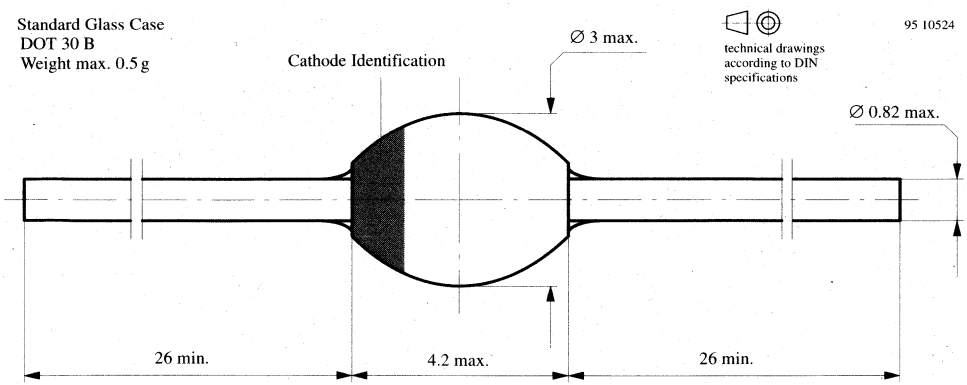

Silicon Mesa Rectifiers

Features

- Glass passivated junction
- Hermetically sealed package
- Low reverse current

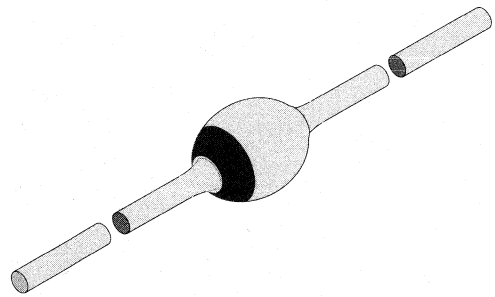

94 9539

Applications

Rectifiers

Absolute Maximum Ratings

$T_j = 25°C$

Parameter	Test Conditions	Type	Symbol	Value	Unit
Reverse voltage, peak reverse voltage		BYT51A	V_R, V_{RRM}	50	V
		BYT51B	V_R, V_{RRM}	100	V
		BYT51D	V_R, V_{RRM}	200	V
		BYT51G	V_R, V_{RRM}	400	V
		BYT51J	V_R, V_{RRM}	600	V
		BYT51K	V_R, V_{RRM}	800	V
		BYT51M	V_R, V_{RRM}	1000	V
Peak forward surge current	t_p=10ms		I_{FSM}	50	A
Repetitive peak forward current			I_{FRM}	9	A
Average forward current	Fig. 1		I_{FAV}	1	A
	l=10mm, T_L=30°C		I_{FAV}	1.5	A
Junction temperature			T_j	175	°C
Storage temperature range			T_{stg}	–65...+175	°C

Maximum Thermal Resistance

$T_j = 25°C$

Parameter	Test Conditions	Symbol	Value	Unit
Junction ambient	l=10mm, T_L=constant	R_{thJA}	45	K/W
	on PC board with spacing 25mm	R_{thJA}	100	K/W

Characteristics

$T_j = 25°C$

Parameter	Test Conditions	Type	Symbol	Min	Typ	Max	Unit
Forward voltage	I_F=1A		V_F		0.95	1.1	V
	I_F=1A, T_j=175°C		V_F			1.0	V
Reverse current	V_R=V_{RRM}		I_R			1	µA
	V_R=V_{RRM}, T_j=150°C		I_R			100	µA
Reverse recovery time	I_F=0.5A, I_R=1A, i_R=0.25A		t_{rr}			4	µs

Typical Characteristics ($T_j = 25°C$ unless otherwise specified)

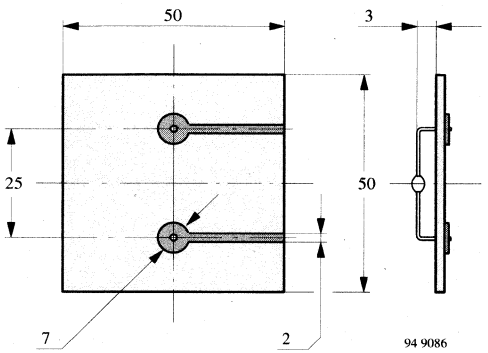

Figure 1. Epoxy glass hard tissue, board thickness 1.5 mm, $R_{thJA} \leqq 100$ K/W

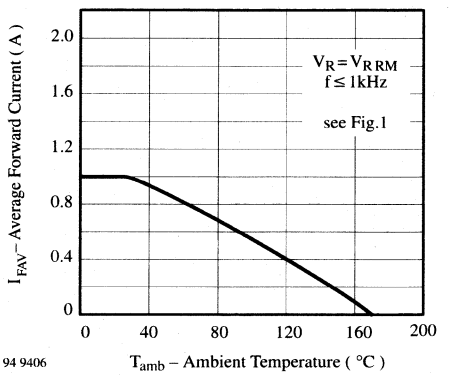

Figure 3. Average Forward Current vs. Ambient Temperature

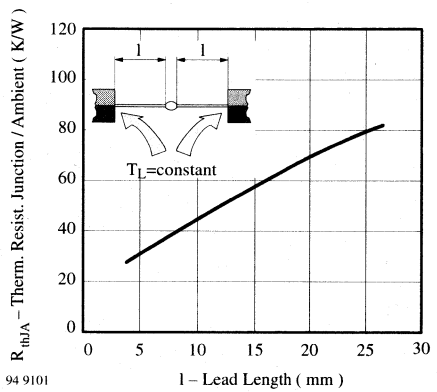

Figure 2. Thermal Resistance vs. Lead Length

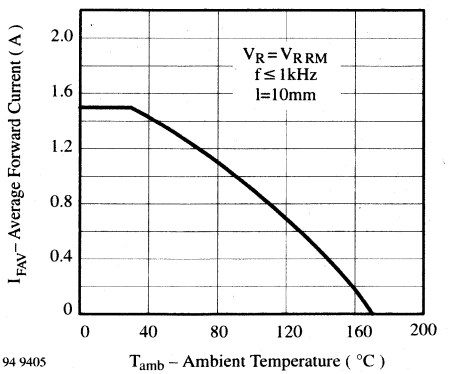

Figure 4. Average Forward Current vs. Ambient Temperature

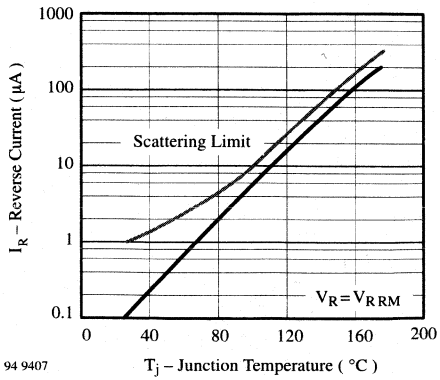

Figure 5. Reverse Current vs. Junction Temperature

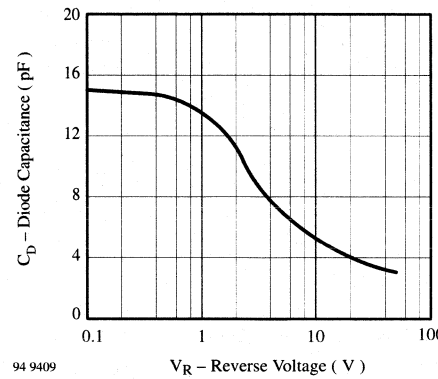

Figure 7. Diode Capacitance vs. Reverse Voltage

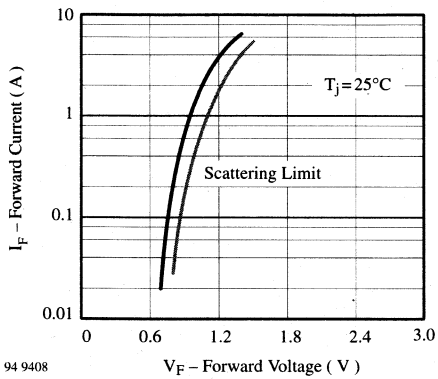

Figure 6. Forward Current vs. Forward Voltage

Dimensions in mm

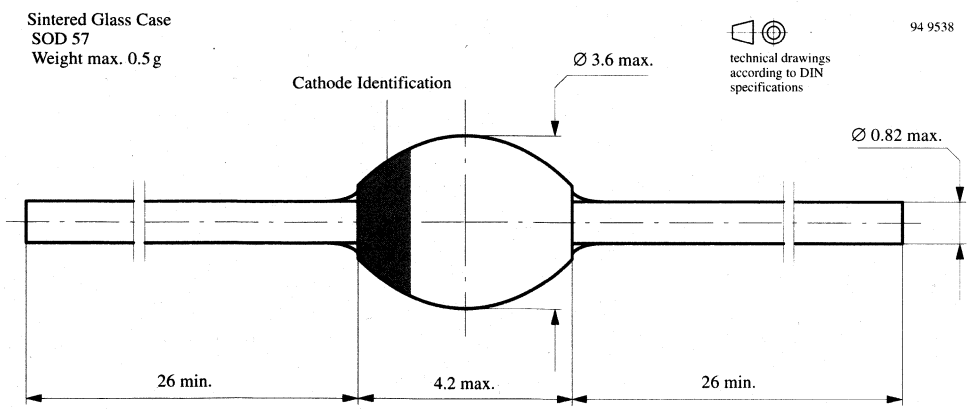

Fast Silicon Mesa Rectifiers

Features

- Glass passivated junction
- Hermetically sealed package
- Low reverse current
- Soft recovery characteristics

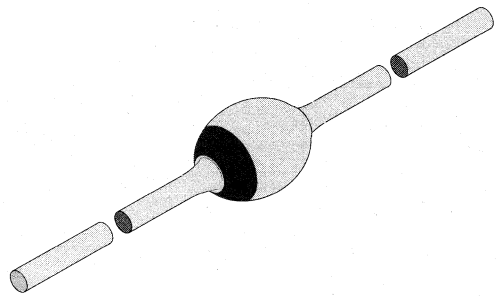

94 9539

Applications

Fast rectifiers and switches

Absolute Maximum Ratings

$T_j = 25°C$

Parameter	Test Conditions	Type	Symbol	Value	Unit
Reverse voltage, peak reverse voltage		BYT52A	V_R, V_{RRM}	50	V
		BYT52B	V_R, V_{RRM}	100	V
		BYT52D	V_R, V_{RRM}	200	V
		BYT52G	V_R, V_{RRM}	400	V
		BYT52J	V_R, V_{RRM}	600	V
		BYT52K	V_R, V_{RRM}	800	V
		BYT52M	V_R, V_{RRM}	1000	V
Peak forward surge current	t_p=10ms		I_{FSM}	50	A
Average forward current	Fig. 1		I_{FAV}	0.85	A
	l=10mm, T_L=25°C		I_{FAV}	1.4	A
Junction temperature			T_j	175	°C
Storage temperature range			T_{stg}	–65...+175	°C

Maximum Thermal Resistance

$T_j = 25°C$

Parameter	Test Conditions	Symbol	Value	Unit
Junction ambient	l=10mm, T_L=constant	R_{thJA}	45	K/W
	on PC board with spacing 25mm	R_{thJA}	100	K/W

Characteristics

$T_j = 25°C$

Parameter	Test Conditions	Type	Symbol	Min	Typ	Max	Unit
Forward voltage	I_F=1A		V_F			1.3	V
Reverse current	V_R=V_{RRM}		I_R			5	µA
	V_R=V_{RRM}, T_j=150°C		I_R			150	µA
Reverse recovery time	I_F=0.5A, I_R=1A, i_R=0.25A		t_{rr}			200	ns

Typical Characteristics (T_j = 25°C unless otherwise specified)

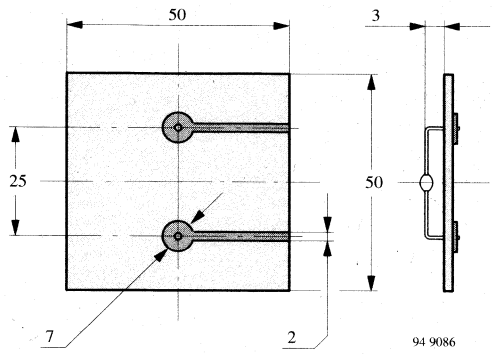

Figure 1. Epoxy glass hard tissue, board thickness 1.5 mm, $R_{thJA} \leqq 100$ K/W

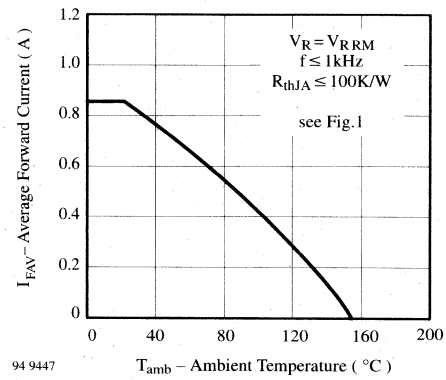

Figure 3. Average Forward Current vs. Ambient Temperature

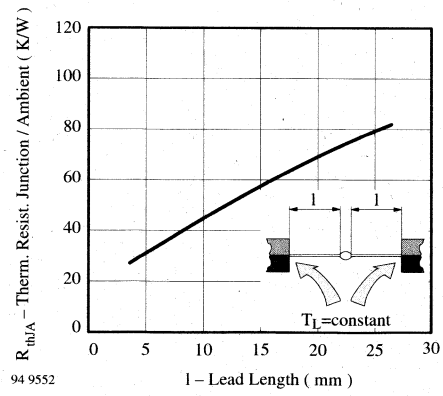

Figure 2. Thermal Resistance vs. Lead Length

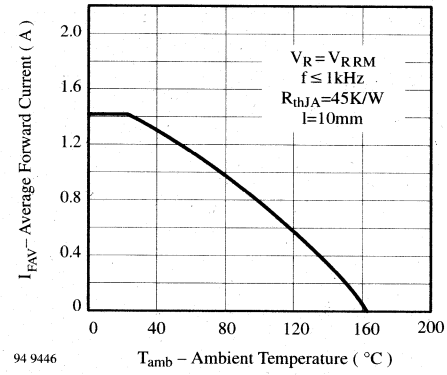

Figure 4. Average Forward Current vs. Ambient Temperature

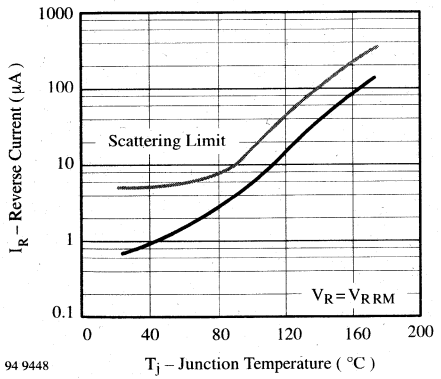

Figure 5. Reverse Current vs. Junction Temperature

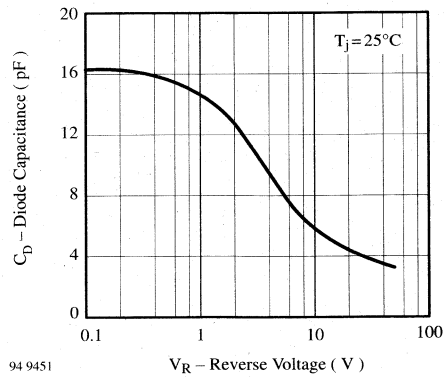

Figure 7. Diode Capacitance vs. Reverse Voltage

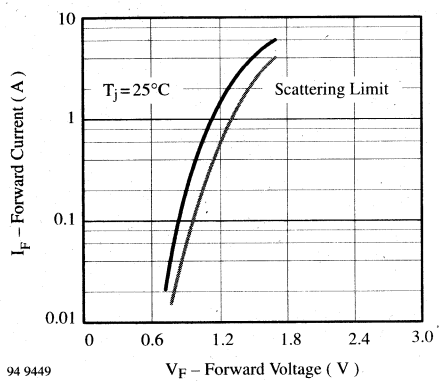

Figure 6. Forward Current vs. Forward Voltage

Dimensions in mm

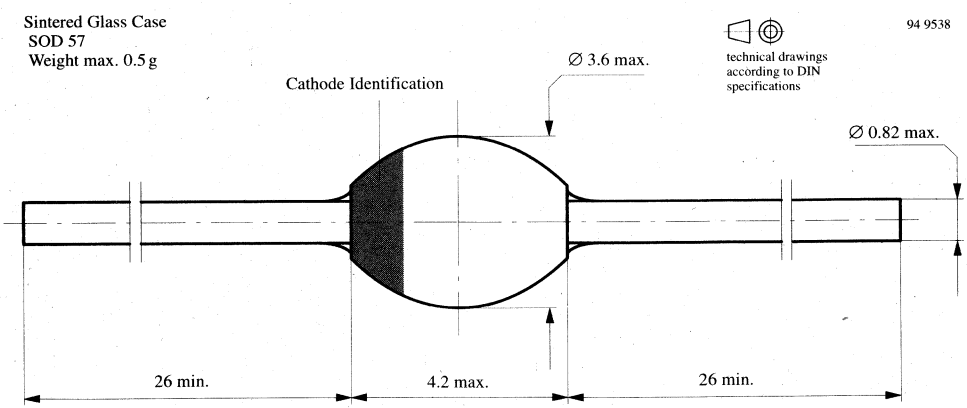

Very Fast Silicon Mesa Rectifiers

Features

- Glass passivated junction
- Hermetically sealed package
- Low reverse current
- Soft recovery characteristics

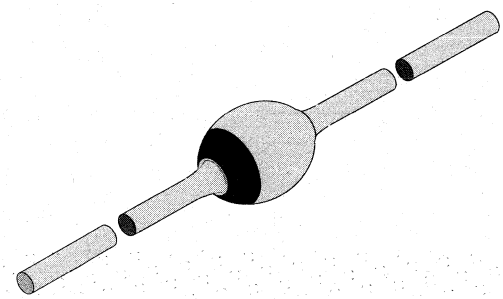

94 9539

Applications

Very fast rectifiers and switches
Switched mode power supplies
High–frequency inverter circuits

Absolute Maximum Ratings

T_j = 25°C

Parameter	Test Conditions	Type	Symbol	Value	Unit
Reverse voltage, peak reverse voltage		BYT53A	$V_R=V_{RRM}$	50	V
		BYT53B	$V_R=V_{RRM}$	100	V
		BYT53C	$V_R=V_{RRM}$	150	V
		BYT53D	$V_R=V_{RRM}$	200	V
		BYT53F	$V_R=V_{RRM}$	300	V
		BYT53G	$V_R=V_{RRM}$	400	V
Reverse voltage		BYT53A	V_R	50	V
		BYT53B	V_R	100	V
		BYT53C	V_R	150	V
		BYT53D	V_R	200	V
		BYT53F	V_R	300	V
		BYT53G	V_R	400	V
Peak forward surge current	t_p=10ms		I_{FSM}	50	A
Average forward current	l=10mm, T_L=25°C		I_{FAV}	1.9	A
Junction temperature			T_j	175	°C
Storage temperature range			T_{stg}	–65...+150	°C

Maximum Thermal Resistance

$T_j = 25°C$

Parameter	Test Conditions	Symbol	Value	Unit
Junction ambient	l=10mm, T_L=constant	R_{thJA}	45	K/W
	on PC board with spacing 25mm	R_{thJA}	100	K/W

Characteristics

$T_j = 25°C$

Parameter	Test Conditions	Type	Symbol	Min	Typ	Max	Unit
Forward voltage	I_F=1A		V_F			1.1	V
	I_F=1A, T_j=175°C		V_F			0.9	V
Reverse current	V_R=V_{RRM}		I_R			5	µA
	V_R=V_{RRM}, T_j=150°C		I_R			200	µA
Reverse recovery time	I_F=0.5A, I_R=1A, i_R=0.25A		t_{rr}			50	ns

Typical Characteristics ($T_j = 25°C$ unless otherwise specified)

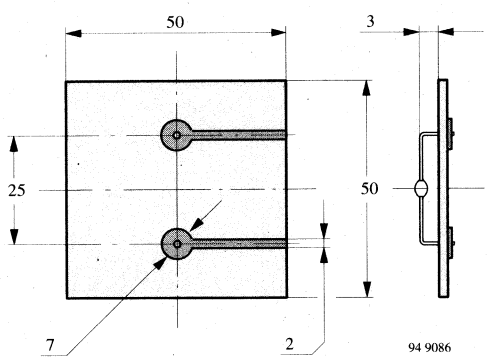

Figure 1. Epoxy glass hard tissue, board thickness 1.5 mm, $R_{thJA} \leqq 100$ K/W

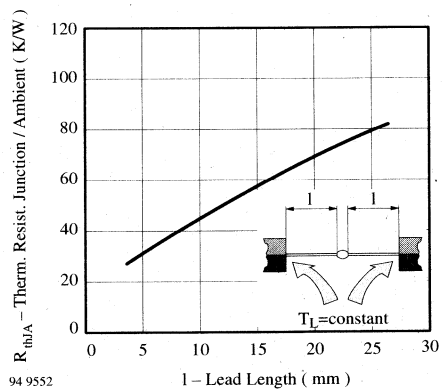

Figure 2. Thermal Resistance vs. Lead Length

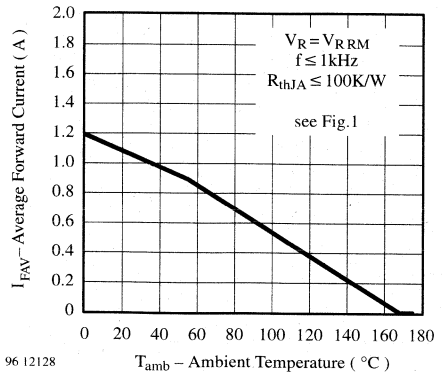

Figure 3. Average Forward Current vs. Ambient Temperature

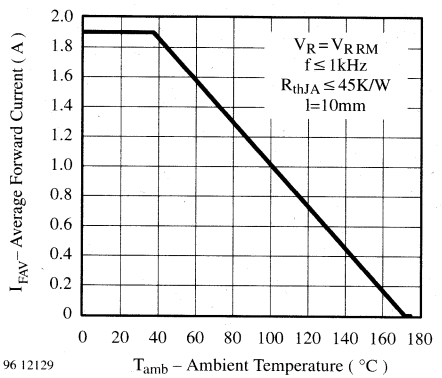

Figure 4. Average Forward Current vs. Ambient Temperature

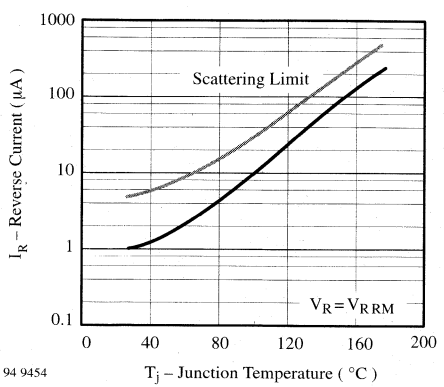

Figure 5. Reverse Current vs. Junction Temperature

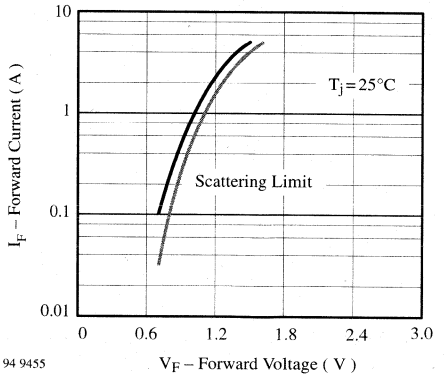

Figure 6. Forward Current vs. Forward Voltage

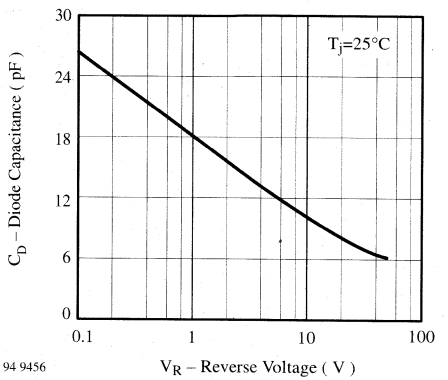

Figure 7. Diode Capacitance vs. Reverse Voltage

Dimensions in mm

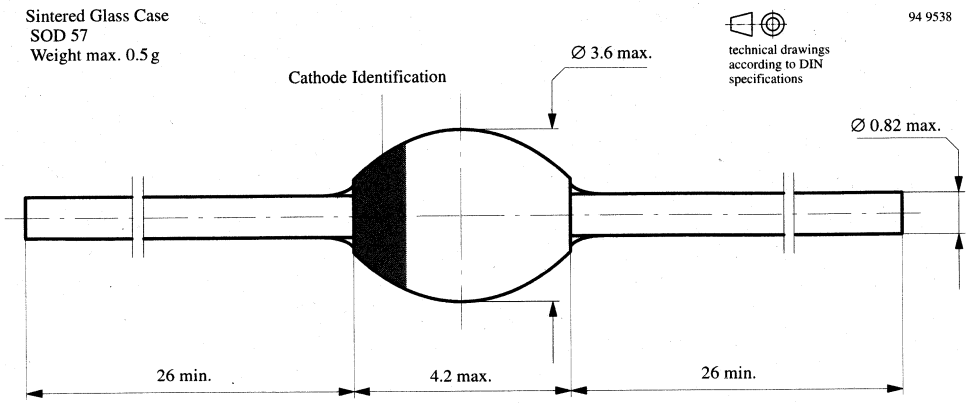

Fast Silicon Mesa Rectifiers

Features

- Glass passivated junction
- Hermetically sealed package
- Low reverse current
- Soft recovery characteristics

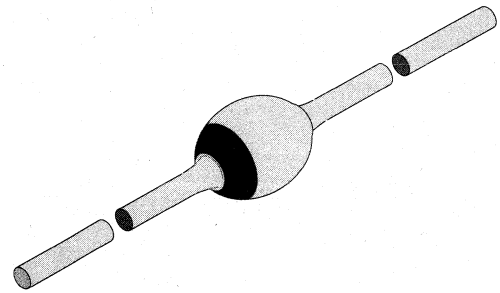

94 9539

Applications

Very fast rectifiers and switches

Absolute Maximum Ratings

$T_j = 25°C$

Parameter	Test Conditions	Type	Symbol	Value	Unit
Reverse voltage, peak reverse voltage		BYT54A	$V_R=V_{RRM}$	50	V
		BYT54B	$V_R=V_{RRM}$	100	V
		BYT54D	$V_R=V_{RRM}$	200	V
		BYT54G	$V_R=V_{RRM}$	400	V
		BYT54J	$V_R=V_{RRM}$	600	V
		BYT54K	$V_R=V_{RRM}$	800	V
		BYT54M	$V_R=V_{RRM}$	1000	V
Peak forward surge current	t_p=10ms		I_{FSM}	30	A
Average forward current	Fig. 1		I_{FAV}	0.75	A
	l=10mm, T_L=25°C		I_{FAV}	1.25	A
Junction temperature		BYT54A..BYT54K	T_j	175	°C
		BYT54M	T_j	165	°C
Storage temperature range		BYT54A..BYT54K	T_{stg}	–65...+175	°C
		BYT54M	T_{stg}	–65...+165	°C

Maximum Thermal Resistance

$T_j = 25°C$

Parameter	Test Conditions	Symbol	Value	Unit
Junction ambient	l=10mm, T_L=constant	R_{thJA}	45	K/W
	on PC board with spacing 25mm	R_{thJA}	100	K/W

Characteristics

$T_j = 25°C$

Parameter	Test Conditions	Type	Symbol	Min	Typ	Max	Unit
Forward voltage	I_F=1A		V_F			1.5	V
Reverse current	V_R=V_{RRM}		I_R			5	µA
	V_R=V_{RRM}, T_j=150°C		I_R			150	µA
Reverse recovery time	I_F=0.5A, I_R=1A, i_R=0.25A		t_{rr}			100	ns

Typical Characteristics (T_j = 25°C unless otherwise specified)

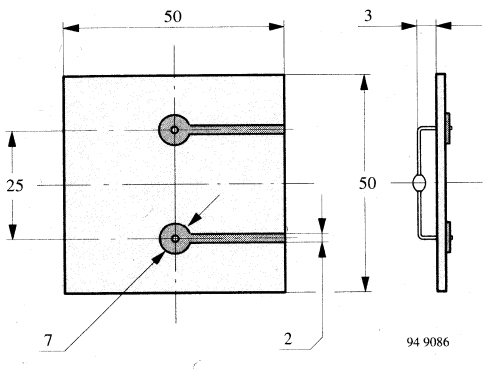

Figure 1. Epoxy glass hard tissue, board thickness 1.5 mm, $R_{thJA} \leqq 100$ K/W

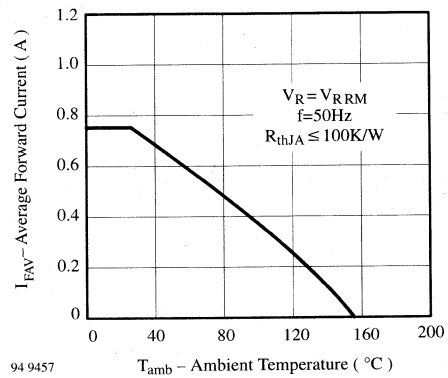

Figure 3. Average Forward Current vs. Ambient Temperature

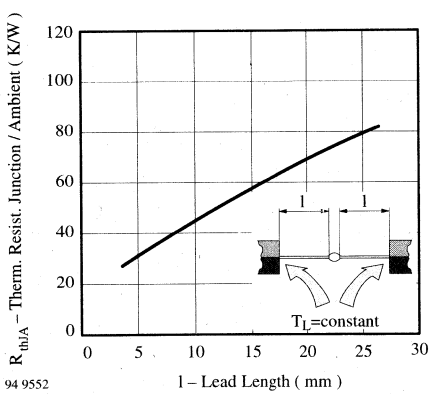

Figure 2. Thermal Resistance vs. Lead Length

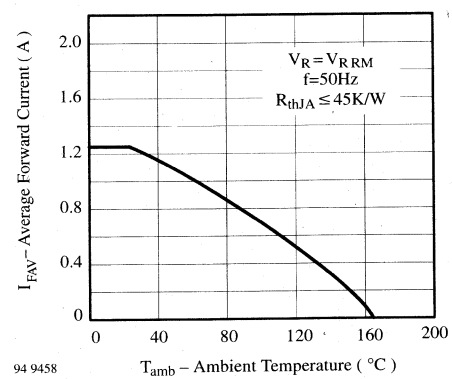

Figure 4. Average Forward Current vs. Ambient Temperature

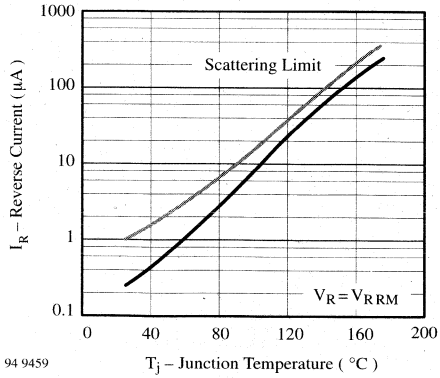

Figure 5. Reverse Current vs. Junction Temperature

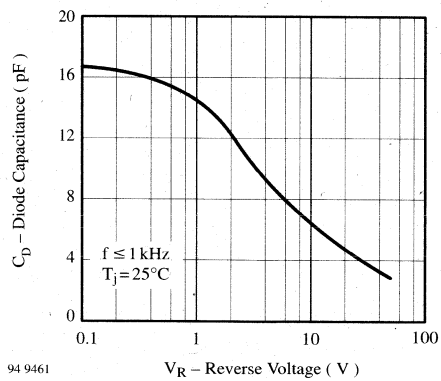

Figure 7. Diode Capacitance vs. Reverse Voltage

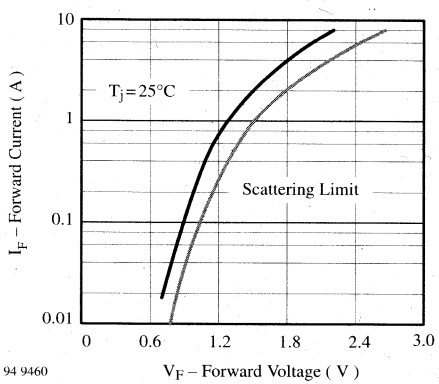

Figure 6. Forward Current vs. Forward Voltage

Dimensions in mm

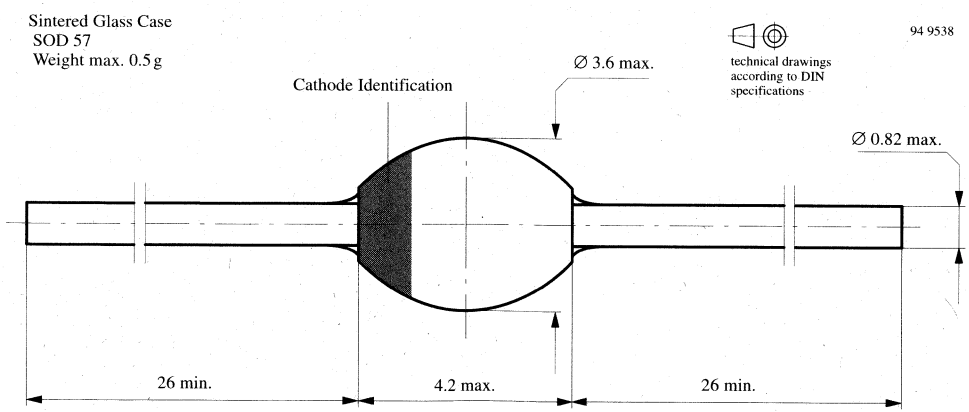

Fast Silicon Mesa Rectifiers

Features

- Glass passivated junction
- Hermetically sealed package
- Low reverse current
- Soft recovery characteristics

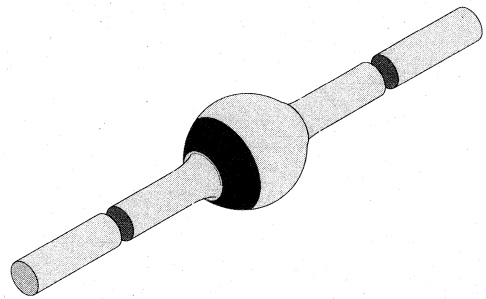

94 9588

Applications

Very fast rectifiers and switches

Absolute Maximum Ratings

$T_j = 25°C$

Parameter	Test Conditions	Type	Symbol	Value	Unit
Reverse voltage, repetitive peak reverse voltage		BYT56A	$V_R=V_{RRM}$	50	V
		BYT56B	$V_R=V_{RRM}$	100	V
		BYT56D	$V_R=V_{RRM}$	200	V
		BYT56G	$V_R=V_{RRM}$	400	V
		BYT56J	$V_R=V_{RRM}$	600	V
		BYT56K	$V_R=V_{RRM}$	800	V
		BYT56M	$V_R=V_{RRM}$	1000	V
Peak forward surge current	t_p=10ms		I_{FSM}	80	A
Average forward current	Fig. 1		I_{FAV}	1.5	A
	l=10mm, T_L=25°C		I_{FAV}	3	A
Junction temperature			T_j	175	°C
Storage temperature range			T_{stg}	–65...+175	°C

Maximum Thermal Resistance

$T_j = 25°C$

Parameter	Test Conditions	Symbol	Value	Unit
Junction ambient	l=10mm, T_L=constant	R_{thJA}	25	K/W
	on PC board with spacing 37.5 mm	R_{thJA}	70	K/W

Characteristics

$T_j = 25°C$

Parameter	Test Conditions	Type	Symbol	Min	Typ	Max	Unit
Forward voltage	I_F=3A		V_F			1.4	V
Reverse current	V_R=V_{RRM}		I_R			5	µA
	V_R=V_{RRM}, T_j=150°C		I_R			150	µA
Reverse recovery time	I_F=0.5A, I_R=1A, i_R=0.25A		t_{rr}			100	ns

Typical Characteristics (T_j = 25°C unless otherwise specified)

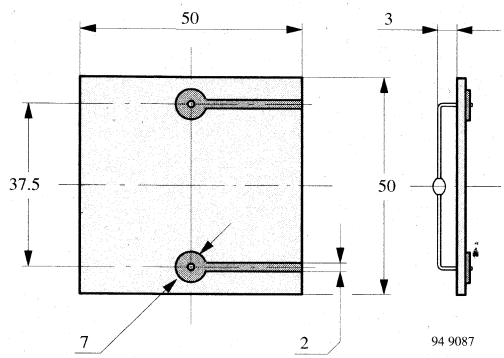

Figure 1. Epoxy glass hard tissue, board thickness 1.5 mm, $R_{thJA} \leqq 70$ K/W

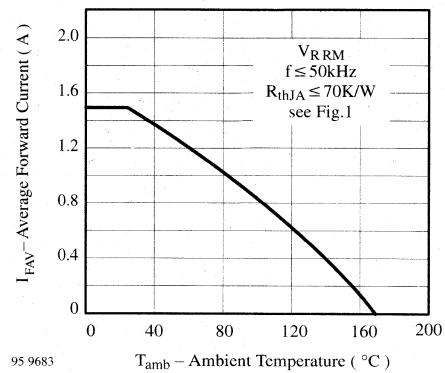

Figure 3. Average Forward Current vs. Ambient Temperature

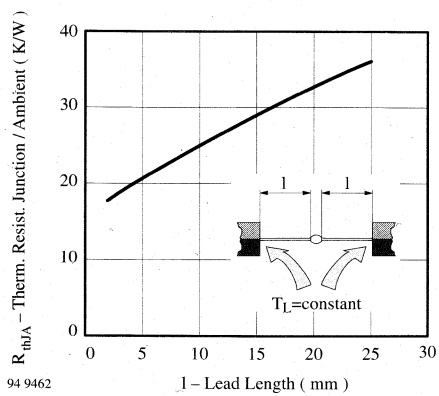

Figure 2. Thermal Resistance vs. Lead Length

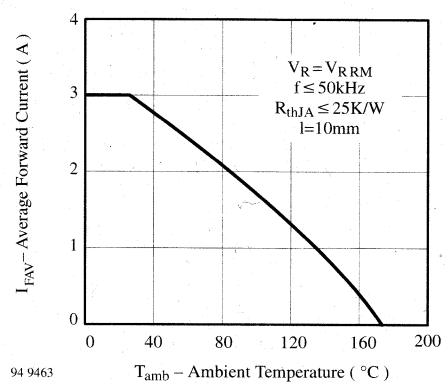

Figure 4. Average Forward Current vs. Ambient Temperature

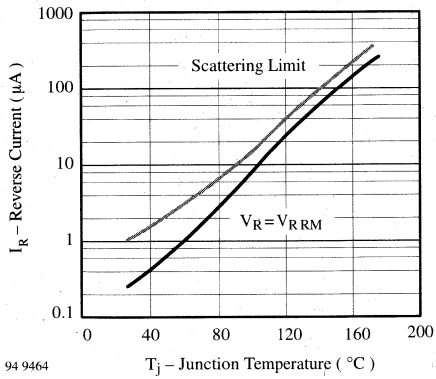

Figure 5. Reverse Current vs. Junction Temperature

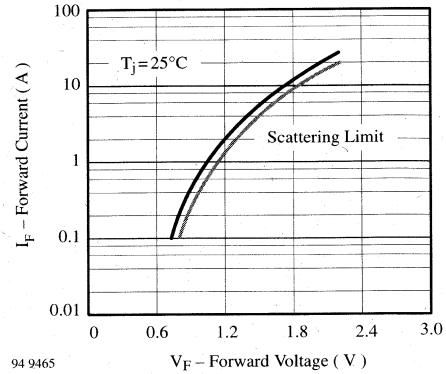

Figure 6. Forward Current vs. Forward Voltage

Dimensions in mm

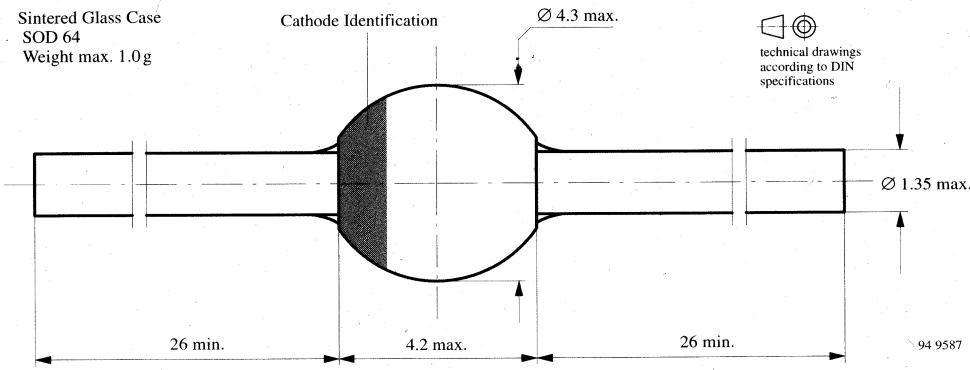

BYT62

Silicon Mesa Rectifier

Features

- Glass passivated junction
- Hermetically sealed package
- Controlled avalanche characteristic
- Low reverse current

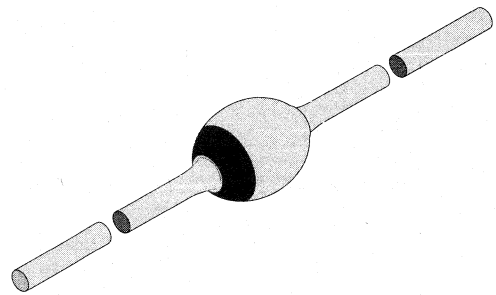

94 9539

Applications

High voltage rectifier

Absolute Maximum Ratings

$T_j = 25°C$

Parameter	Test Conditions	Type	Symbol	Value	Unit
Repetitive peak reverse voltage			V_{RRM}	2400	V
Reverse voltage			V_R	2400	V
Peak forward surge current	t_p=10ms, half sinewave		I_{FSM}	10	A
Average forward current	T_{amb}=25°C, $R_{thJA} \leqq 60K/W$		I_{FAV}	350	mA
Non repetitive reverse avalanche energy	$I_{(BR)R}$=1A, inductive load		E_R	60	mJ
Junction temperature			T_j	175	°C
Storage temperature range			T_{stg}	–55...+190	°C

Maximum Thermal Resistance

$T_j = 25°C$

Parameter	Test Conditions	Symbol	Value	Unit
Junction ambient	l=10mm, T_L=constant	R_{thJA}	60	K/W

Characteristics

$T_j = 25°C$

Parameter	Test Conditions	Type	Symbol	Min	Typ	Max	Unit
Forward voltage	I_F=200mA		V_F			3.0	V
	I_F=1A		V_F			3.6	V
	I_F=1A, T_j=175°C		V_F			2.9	V
	I_F=1A, T_j=–40°C		V_F			4.0	V
Reverse current	V_R=V_{RRM}		I_R			5	µA
	V_R=V_{RRM}, T_j=175°C		I_R			250	µA
	V_R=V_{RRM}, T_j=–40°C		I_R			400	nA
Reverse breakdown voltage	I_R=100µA		$V_{(BR)R}$	2500			V
Reverse recovery time	I_F=0.5A, I_R=1A, i_R=0.25A		t_{rr}			5	µs

Typical Characteristics ($T_j = 25°C$ unless otherwise specified)

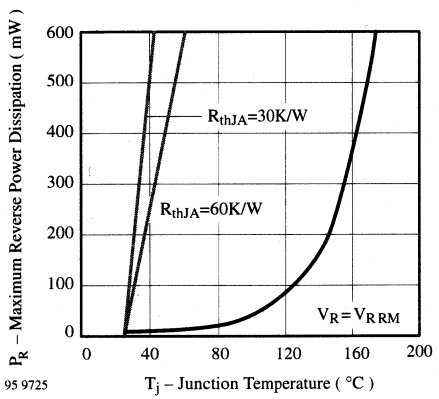

Figure 1. Maximum Reverse Power Dissipation vs. Junction Temperature

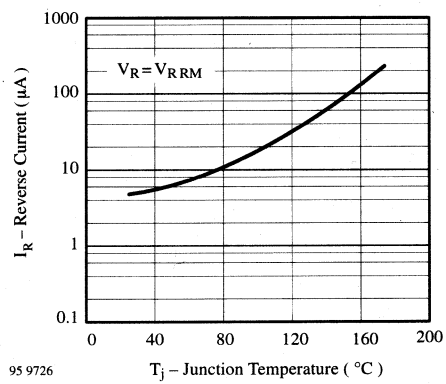

Figure 2. Reverse Current vs. Junction Temperature

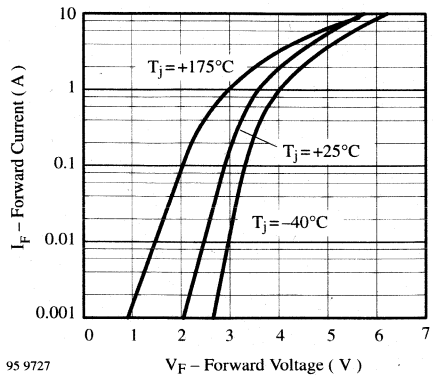

Figure 3. Forward Current vs. Forward Voltage

Dimensions in mm

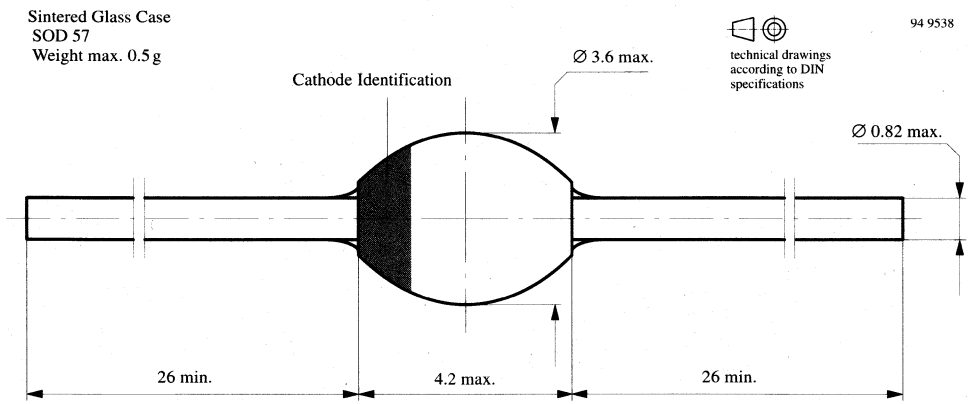

Fast Silicon Mesa Rectifiers

Features

- Glass passivated junction
- Hermetically sealed package
- Low reverse current
- Soft recovery characteristics

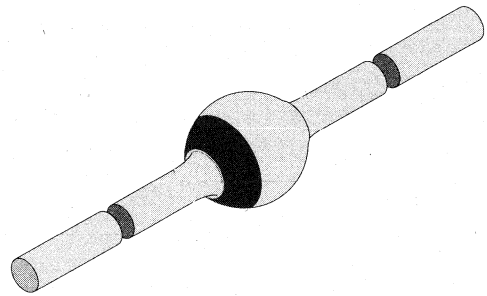

94 9588

Applications

Fast "soft recovery" rectifier

Absolute Maximum Ratings

$T_j = 25°C$

Parameter	Test Conditions	Type	Symbol	Value	Unit
Reverse voltage		BYT77	V_R	800	V
		BYT78	V_R	1000	V
Peak forward surge current	t_p=10ms		I_{FSM}	100	A
Average forward current	$T_{amb} \leqq 45°C$		I_{FAV}	3	A
Junction temperature			T_j	175	°C
Storage temperature range			T_{stg}	–65...+175	°C

Maximum Thermal Resistance

$T_j = 25°C$

Parameter	Test Conditions	Symbol	Value	Unit
Junction ambient	l=10mm, T_L=constant	R_{thJA}	25	K/W
Junction ambient	on PC board with spacing 37.5mm	R_{thJA}	70	K/W

Characteristics

$T_j = 25°C$

Parameter	Test Conditions	Type	Symbol	Min	Typ	Max	Unit
Forward voltage	I_F=3A		V_F		1.0	1.1	V
Reverse current	V_R		I_R		1	5	µA
	V_R, T_j=150°C		I_R		60	150	µA
Reverse recovery time	I_F=0.5A, I_R=1A, i_R=0.25A		t_{rr}			300	ns

Typical Characteristics (T_j = 25°C unless otherwise specified)

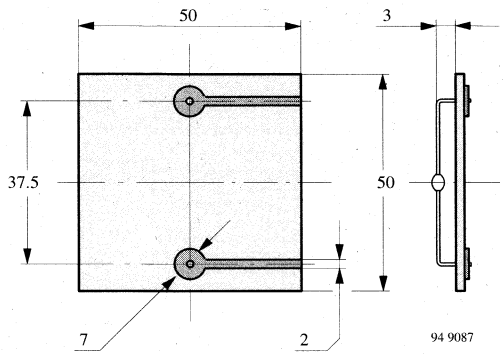

Figure 1. Epoxy glass hard tissue, board thickness 1.5 mm, $R_{thJA} \leqq 70$ K/W

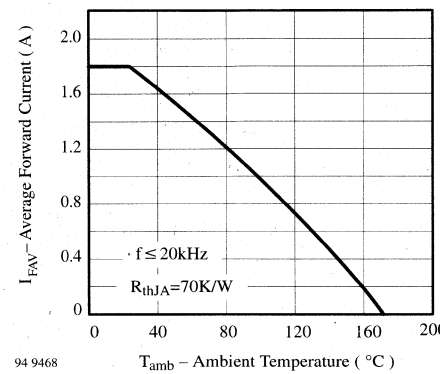

Figure 3. Average Forward Current vs. Ambient Temperature

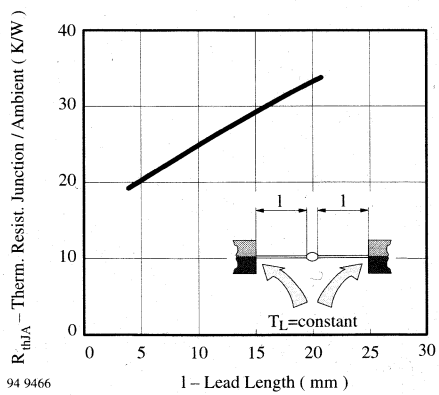

Figure 2. Thermal Resistance vs. Lead Length

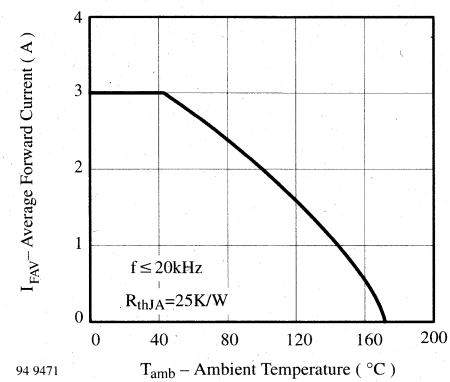

Figure 4. Average Forward Current vs. Ambient Temperature

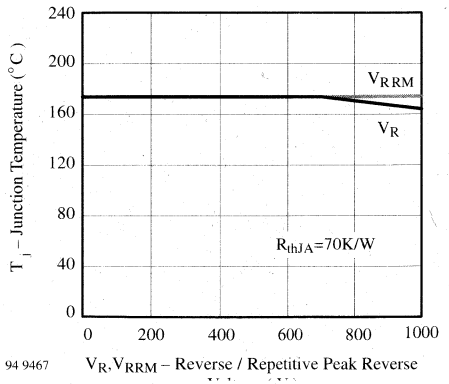

Figure 5. Junction Temperature vs. Reverse/Repetitive Peak Reverse Voltage

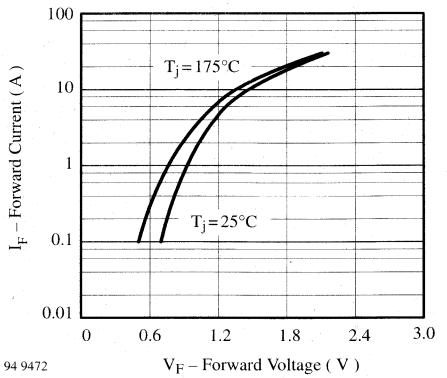

Figure 7. Forward Current vs. Forward Voltage

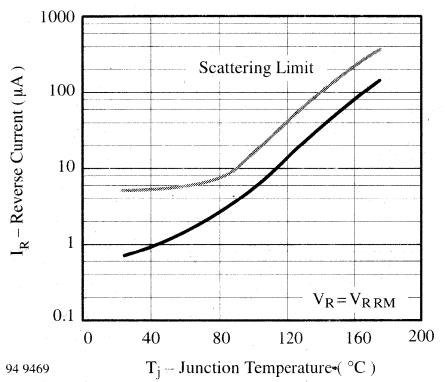

Figure 6. Reverse Current vs. Junction Temperature

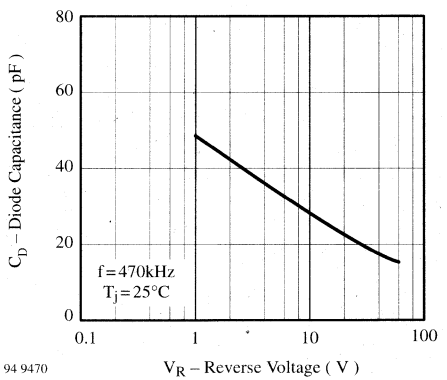

Figure 8. Diode Capacitance vs. Reverse Voltage

Dimensions in mm

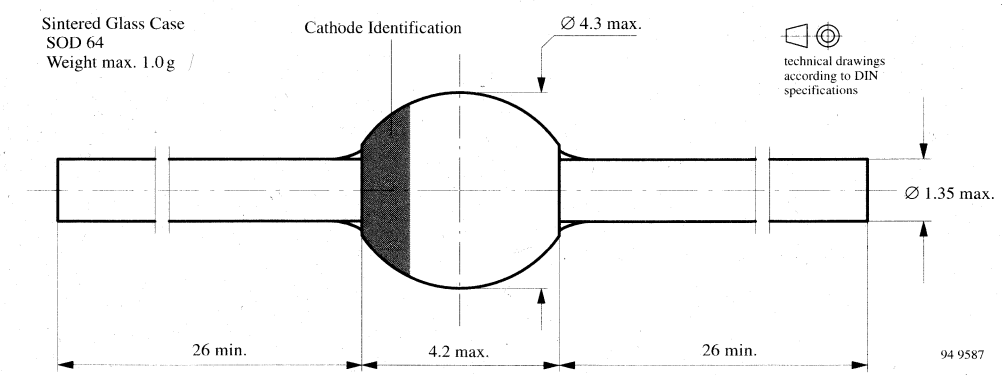

Ultra Fast Recovery Silicon Power Rectifier

Features

- Multiple diffusion
- High voltage
- High current
- Glass passivated junction
- Ultra fast forward recovery time
- Ultra fast reverse recovery time

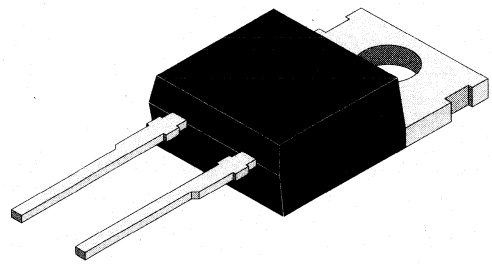

94 9537

Applications

Fast rectifiers in S.M.P.S, freewheeling and snubber diode in motor control circuits

Absolute Maximum Ratings

$T_j = 25°C$

Parameter	Test Conditions	Type	Symbol	Value	Unit
Reverse voltage, repetitive peak reverse voltage		BYT85–600	V_R, V_{RRM}	600	V
		BYT85–800	V_R, V_{RRM}	800	V
		BYT85–1000	V_R, V_{RRM}	1000	V
Peak forward surge current			I_{FSM}	80	A
Repetitive peak forward current			I_{FRM}	20	A
Average forward current			I_{FAV}	4	A
Junction temperature			T_j	150	°C
Storage temperature range			T_{stg}	–55...+150	°C

Maximum Thermal Resistance

$T_j = 25°C$

Parameter	Test Conditions	Symbol	Value	Unit
Junction case		R_{thJC}	3	K/W

Characteristics

$T_j = 25°C$

Parameter	Test Conditions	Type	Symbol	Min	Typ	Max	Unit
Forward voltage	I_F=4A		V_F			1.8	V
	I_F=4A, T_j=100°C		V_F			1.8	V
Reverse current	V_R=V_{RRM}		I_R			10	µA
	V_R=V_{RRM}, T_j=100°C		I_R			0.1	mA
Forward recovery time	I_F=4A, $di_F/dt \leqq 50A/\mu s$		t_{fr}		350		ns
Turn on transient peak voltage			V_{FP}		5		V
Reverse recovery characteristics, see Fig. 3	I_F=4A, di_F/dt=–100A/µs, V_{Batt}=200V		I_{RM}		7		A
			t_{IRM}		70		ns
Reverse recovery time	I_F=4A, di_F/dt=–100A/µs, V_{Batt}=200V		t_{rr}		125		ns
	I_F=0.5A, I_R=1A, i_R=0.25A		t_{rr}			80	ns

Typical Characteristics ($T_j = 25°C$ unless otherwise specified)

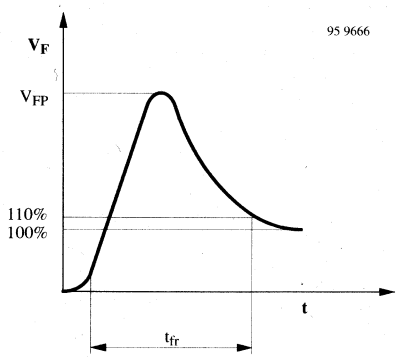

Figure 1. Turn on transient peak voltage

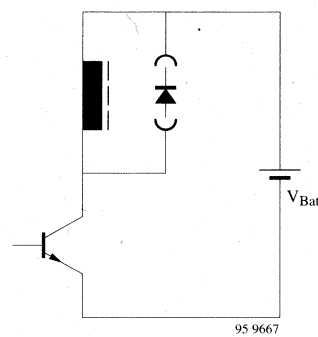

Figure 2. Test circuit

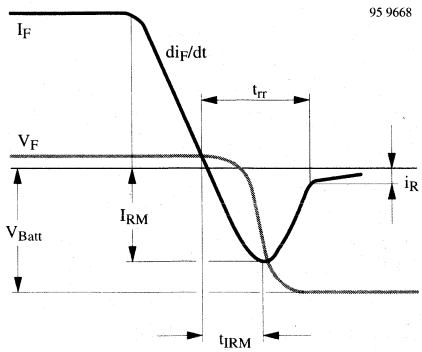

Figure 3. Turn off switching characteristic

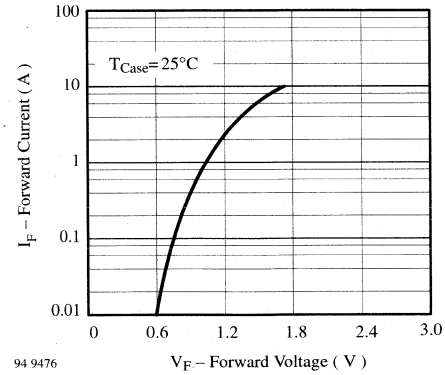

Figure 6. Forward Current vs. Forward Voltage

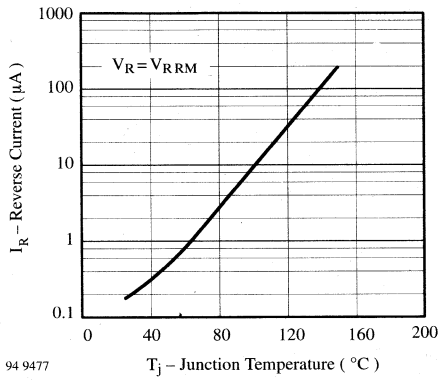

Figure 4. Reverse Current vs. Junction Temperature

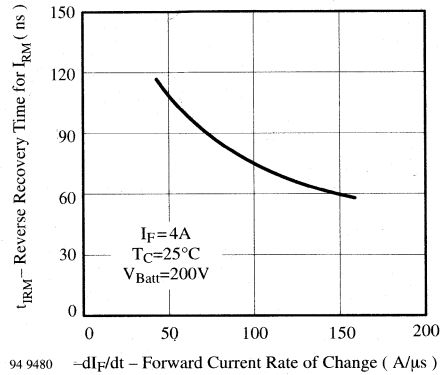

Figure 7. Reverse Recovery Time for IRM vs. Forward Current Rate of Change

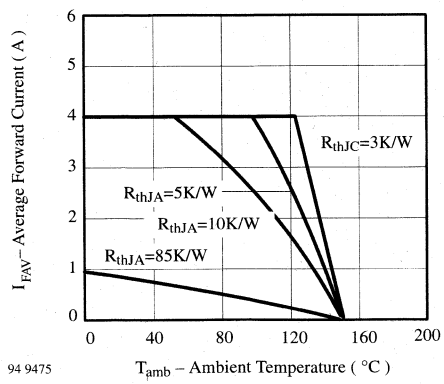

Figure 5. Average Forward Current vs. Ambient Temperature

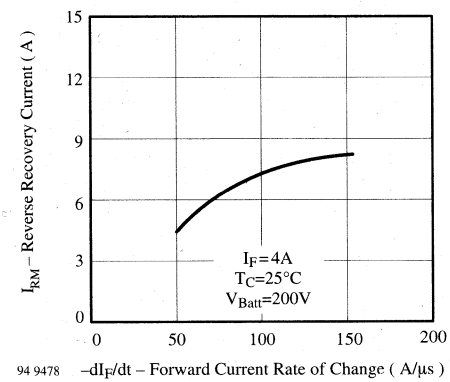

Figure 8. Reverse Recovery Current vs. Forward Current Rate of Change

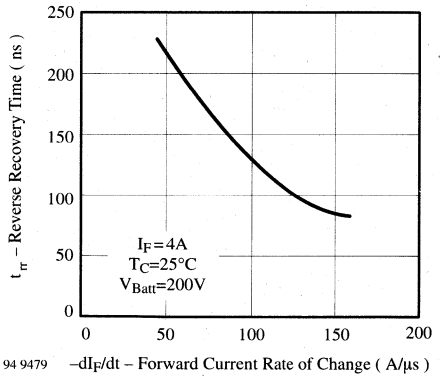

Figure 9. Reverse Recovery Time vs. Forward Current Rate of Change

Dimensions in mm

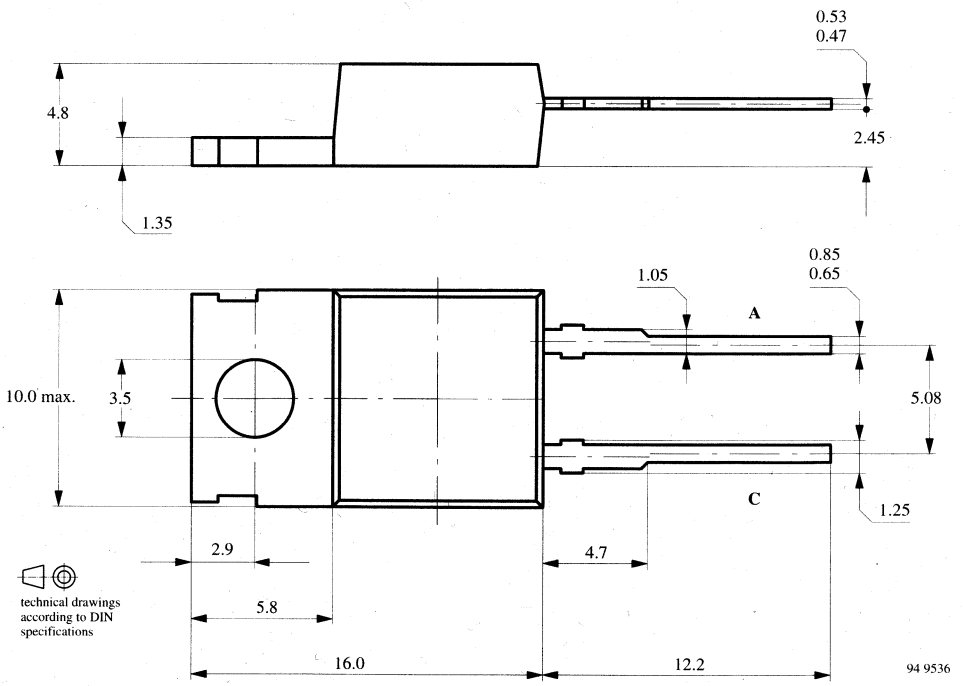

Cathode connected with metallic surface , Plastic Case DO 220 , Weight max.: 2.5 g

Ultra Fast Recovery Silicon Power Rectifier

Features

- Multiple diffusion
- High voltage
- High current
- Glass passivated junction
- Ultra fast forward recovery time
- Ultra fast reverse recovery time

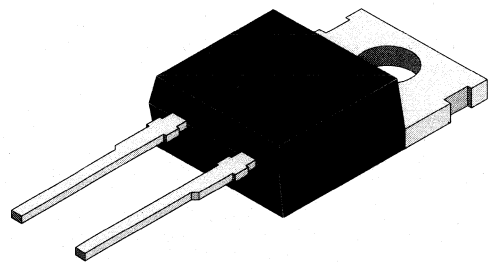

94 9537

Applications

Fast rectifiers in S.M.P.S, freewheeling and snubber diode in motor control circuits

Absolute Maximum Ratings

$T_j = 25°C$

Parameter	Test Conditions	Type	Symbol	Value	Unit
Reverse voltage, repetitive peak reverse voltage		BYT86–600	V_R, V_{RRM}	600	V
		BYT86–800	V_R, V_{RRM}	800	V
		BYT86–1000	V_R, V_{RRM}	1000	V
Peak forward surge current			I_{FSM}	90	A
Repetitive peak forward current			I_{FRM}	25	A
Average forward current			I_{FAV}	8	A
Junction temperature			T_j	150	°C
Storage temperature range			T_{stg}	–55...+150	°C

Maximum Thermal Resistance

$T_j = 25°C$

Parameter	Test Conditions	Symbol	Value	Unit
Junction case		R_{thJC}	2.4	K/W

Characteristics

$T_j = 25°C$

Parameter	Test Conditions	Type	Symbol	Min	Typ	Max	Unit
Forward voltage	I_F=8A		V_F			1.8	V
	I_F=8A, T_j=100°C		V_F			1.8	V
Reverse current	V_R=V_{RRM}		I_R			10	µA
	V_R=V_{RRM}, T_j=100°C		I_R			0.2	mA
Forward recovery time	I_F=8A, $di_F/dt \leqq 50A/\mu s$		t_{fr}		350		ns
Turn on transient peak voltage			V_{FP}		7		V
Reverse recovery characteristics, see Fig. 3	I_F=8A, di_F/dt =–100A/µs, V_{Batt}=200V		I_{RM}		12		A
			t_{IRM}		110		ns
Reverse recovery time	I_F=8A, di_F/dt =–100A/µs, V_{Batt}=200V		t_{rr}		150		ns
	I_F=0.5A, I_R=1A, i_R=0.25A		t_{rr}			80	ns

Typical Characteristics (T_j = 25°C unless otherwise specified)

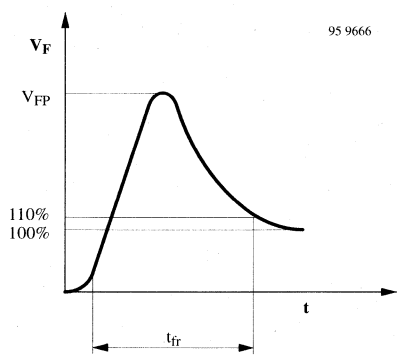

Figure 1. Turn on transient peak voltage

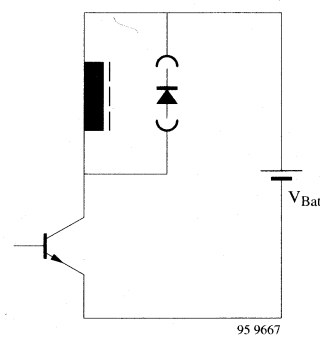

Figure 2. Test circuit

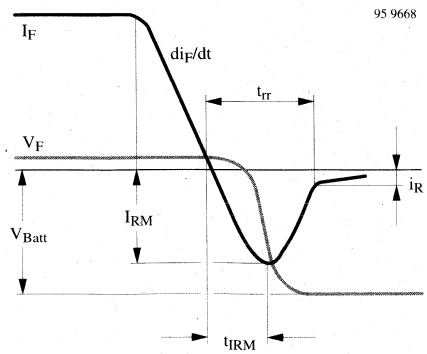

Figure 3. Turn off switching characteristic

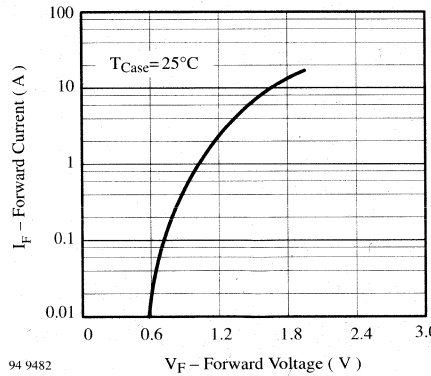

Figure 6. Forward Current vs. Forward Voltage

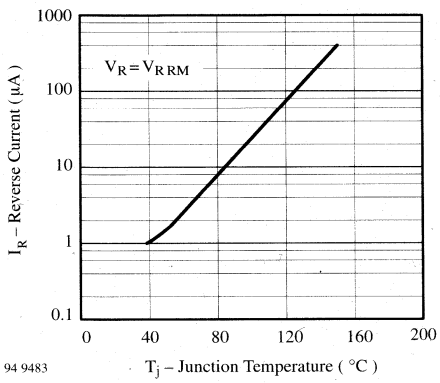

Figure 4. Reverse Current vs. Junction Temperature

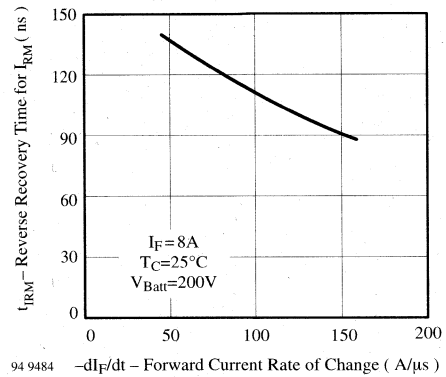

Figure 7. Reverse Recovery Time for IRM vs. Forward Current Rate of Change

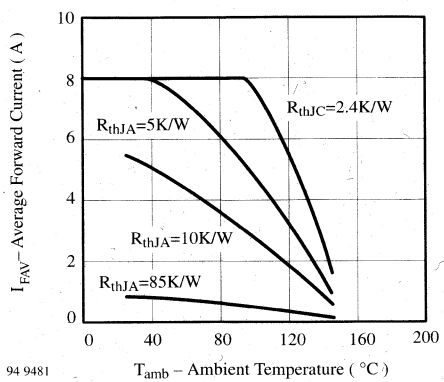

Figure 5. Average Forward Current vs. Ambient Temperature

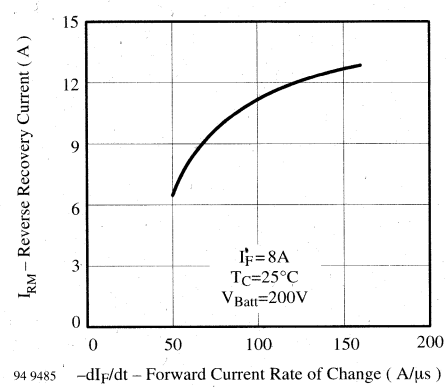

Figure 8. Reverse Recovery Current vs. Forward Current Rate of Change

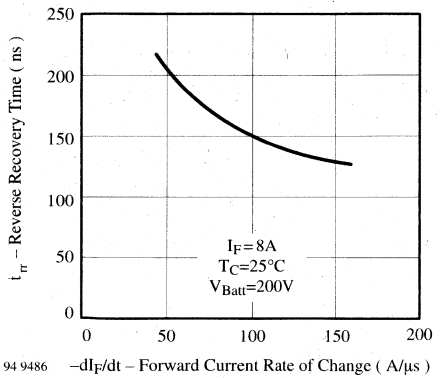

Figure 9. Reverse Recovery Time vs. Forward Current Rate of Change

Dimensions in mm

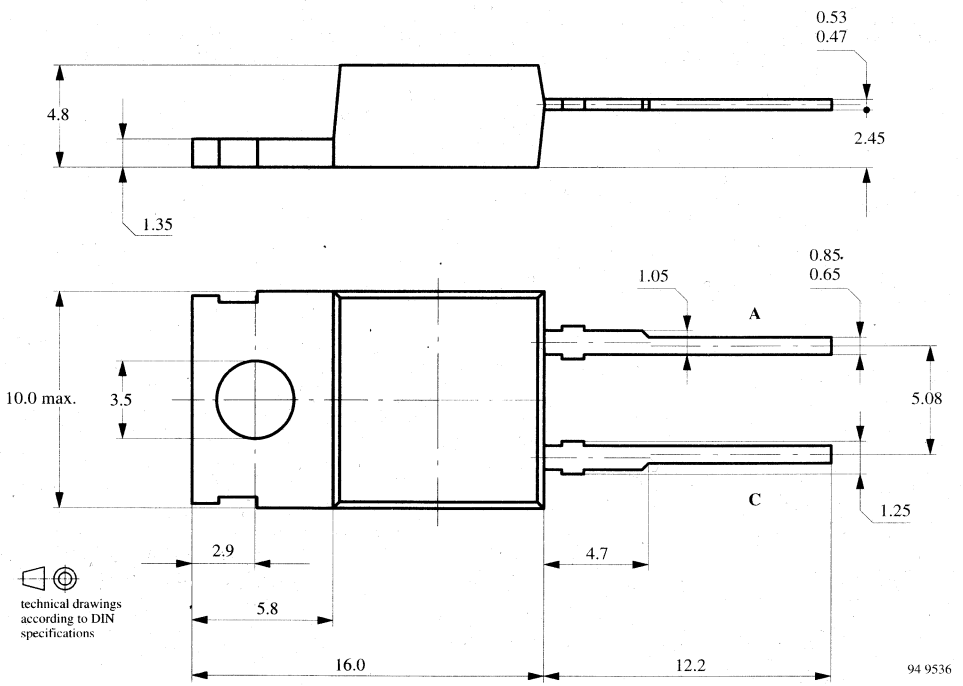

Cathode connected with metallic surface , Plastic Case DO 220 , Weight max.: 2.5 g

BYT86/1300

Fast Recovery Silicon Power Rectifier

Features

- Multiple diffusion
- Mesa glass passivated
- Low switch on power losses
- Good soft recovery behaviour
- Fast forward recovery time
- Fast reverse recovery time
- Low reverse current
- Very good reverse current stability at high temperature
- Low thermal resistance

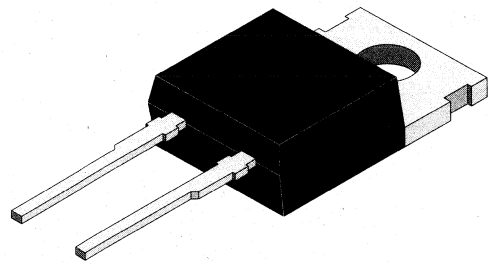

94 9537

Applications

Fast rectifiers in S.M.P.S
Freewheeling diodes and snubber diodes in motor control circuits

Absolute Maximum Ratings

$T_j = 25°C$

Parameter	Test Conditions	Type	Symbol	Value	Unit
Reverse voltage, repetitive peak reverse voltage			$V_R=V_{RRM}$	1300	V
Peak forward surge current	t_p=10ms		I_{FSM}	50	A
Repetitive peak forward current			I_{FRM}	15	A
Average forward current			I_{FAV}	5	A
Junction temperature			T_j	150	°C
Storage temperature range			T_{stg}	–40...+150	°C

Maximum Thermal Resistance

$T_j = 25°C$

Parameter	Test Conditions	Symbol	Value	Unit
Junction case		R_{thJC}	2.4	K/W
Junction ambient		R_{thJA}	85	K/W

Characteristics

$T_j = 25°C$

Parameter	Test Conditions	Type	Symbol	Min	Typ	Max	Unit
Forward voltage	I_F=5A		V_F			1.8	V
	I_F=5A, T_j=100°C		V_F			1.8	V
Reverse current	V_R=V_{RRM}		I_R			10	µA
	V_R=V_{RRM}, T_j=100°C		I_R			0.2	mA
Forward recovery time	I_F=5A, $di_F/dt \leqq 50A/\mu s$		t_{fr}		350		ns
Turn on transient peak voltage			V_{FP}		7		V
Reverse recovery time	I_F=0.5A, I_R=1A, i_R=0.25A		t_{rr}			150	ns

Typical Characteristics ($T_j = 25°C$ unless otherwise specified)

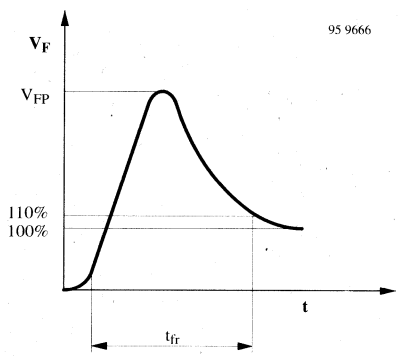

Figure 1. Turn on transient peak voltage

Dimensions in mm

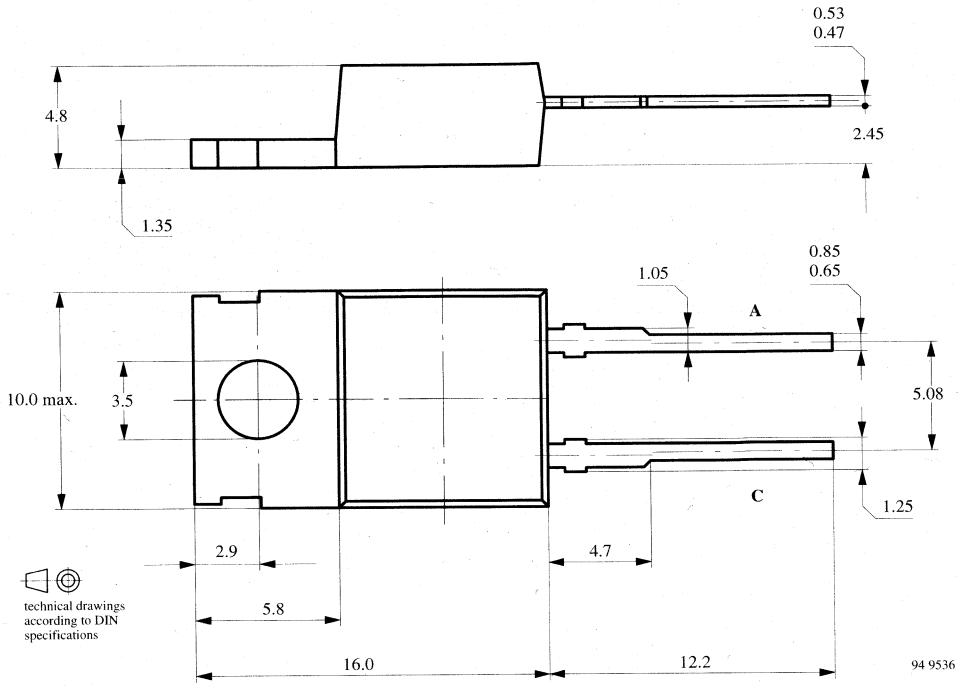

Cathode connected with metallic surface , Plastic Case DO 220 , Weight max.: 2.5 g

Ultra Fast Recovery Silicon Power Rectifier

Features

- Multiple diffusion
- High voltage
- High current
- Glass passivated junction
- Ultra fast forward recovery time
- Ultra fast reverse recovery time

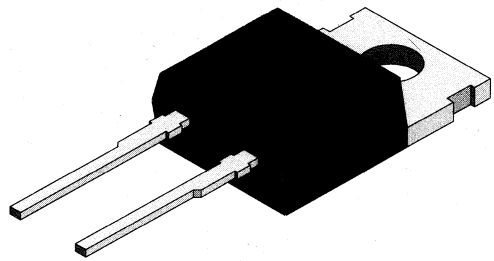

94 9537

Applications

Fast rectifiers in S.M.P.S, freewheeling and snubber diode in motor control circuits

Absolute Maximum Ratings

$T_j = 25°C$

Parameter	Test Conditions	Type	Symbol	Value	Unit
Reverse voltage, repetitive peak reverse voltage		BYT87–600	V_R, V_{RRM}	600	V
		BYT87–800	V_R, V_{RRM}	800	V
		BYT87–1000	V_R, V_{RRM}	1000	V
Peak forward surge current			I_{FSM}	100	A
Repetitive peak forward current			I_{FRM}	30	A
Average forward current			I_{FAV}	15	A
Junction temperature			T_j	150	°C
Storage temperature range			T_{stg}	–55...+150	°C

Maximum Thermal Resistance

$T_j = 25°C$

Parameter	Test Conditions	Symbol	Value	Unit
Junction case		R_{thJC}	1.6	K/W

Characteristics

$T_j = 25°C$

Parameter	Test Conditions	Type	Symbol	Min	Typ	Max	Unit
Forward voltage	I_F=15A		V_F			1.8	V
	I_F=15A, T_j=100°C		V_F			1.8	V
Reverse current	V_R=V_{RRM}		I_R			10	µA
	V_R=V_{RRM}, T_j=100°C		I_R			0.4	mA
Forward recovery time	I_F=15A, $di_F/dt \leqq 50A/\mu s$		t_{fr}		350		ns
Turn on transient peak voltage			V_{FP}		7		V
Reverse recovery characteristics, see Fig. 3	I_F=15A, di_F/dt=–100A/µs, V_{Batt}=200V		I_{RM}		10.5		A
			t_{IRM}		110		ns
Reverse recovery time	I_F=15A, di_F/dt=–100A/µs, V_{Batt}=200V		t_{rr}		150		ns
	I_F=0.5A, I_R=1A, i_R=0.25A		t_{rr}			80	ns

Typical Characteristics (T_j = 25°C unless otherwise specified)

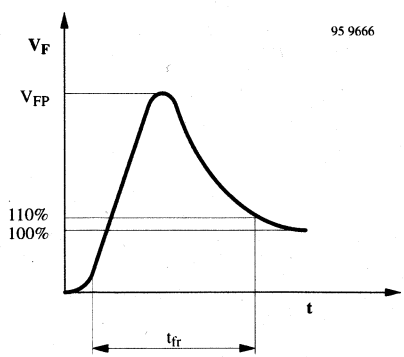

Figure 1. Turn on transient peak voltage

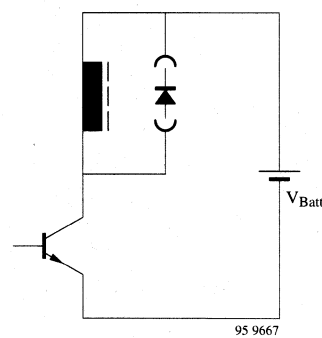

Figure 2. Test circuit

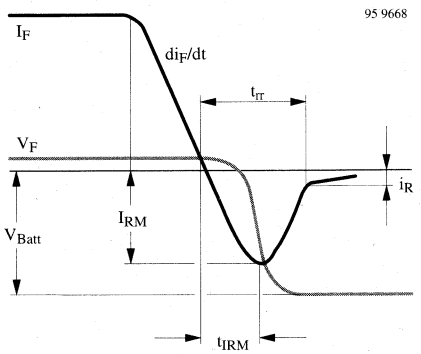

Figure 3. Turn off switching characteristic

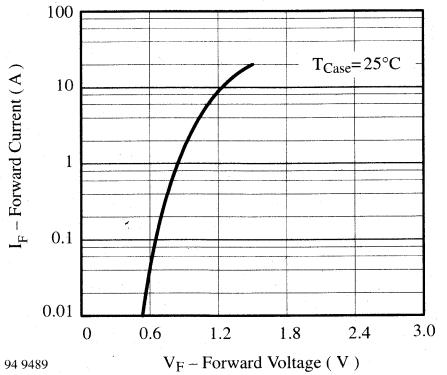

Figure 6. Forward Current vs. Forward Voltage

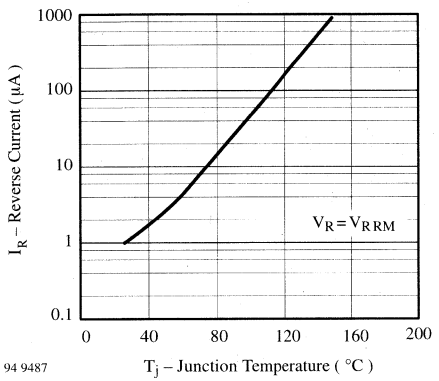

Figure 4. Reverse Current vs. Junction Temperature

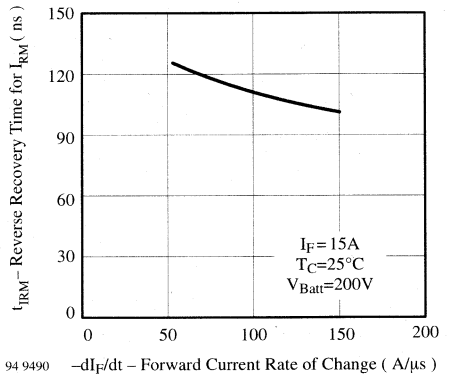

Figure 7. Reverse Recovery Time for IRM vs. Forward Current Rate of Change

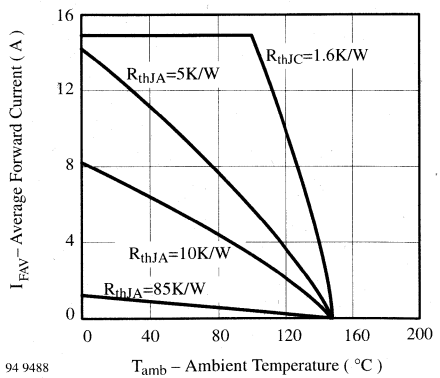

Figure 5. Average Forward Current vs. Ambient Temperature

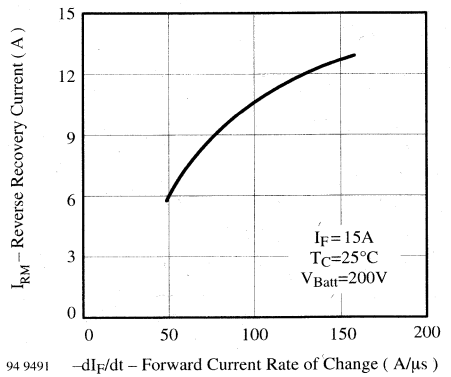

Figure 8. Reverse Recovery Current vs. Forward Current Rate of Change

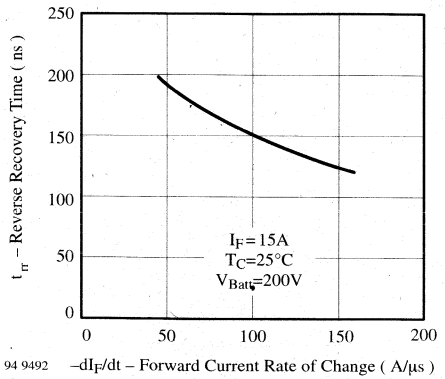

Figure 9. Reverse Recovery Time vs. Forward Current Rate of Change

Dimensions in mm

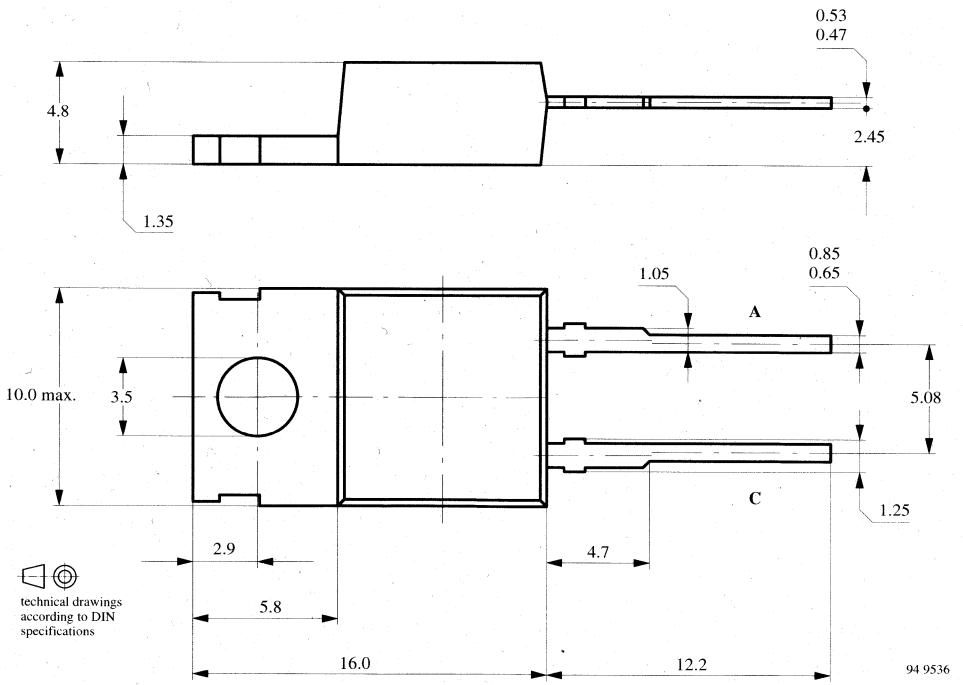

Cathode connected with metallic surface , Plastic Case DO 220 , Weight max.: 2.5 g

Fast Recovery Silicon Power Rectifier

Features

- Multiple diffusion
- Mesa glass passivated
- Low switch on power losses
- Good soft recovery behaviour
- Fast forward recovery time
- Fast reverse recovery time
- Low reverse current
- Very good reverse current stability at high temperature
- Low thermal resistance

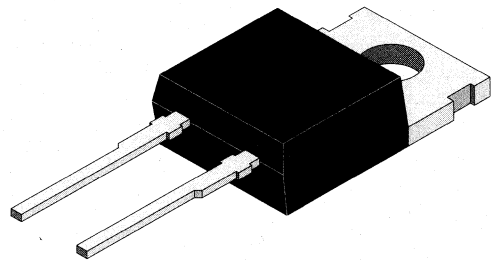

94 9537

Applications

Fast rectifiers in S.M.P.S
Freewheeling diodes and snubber diodes in motor control circuits

Absolute Maximum Ratings

$T_j = 25°C$

Parameter	Test Conditions	Type	Symbol	Value	Unit
Reverse voltage, repetitive peak reverse voltage			$V_R=V_{RRM}$	1300	V
Peak forward surge current	t_p=10ms		I_{FSM}	50	A
Repetitive peak forward current			I_{FRM}	15	A
Average forward current			I_{FAV}	5	A
Junction temperature			T_j	150	°C
Storage temperature range			T_{stg}	–40...+150	°C

Maximum Thermal Resistance

$T_j = 25°C$

Parameter	Test Conditions	Symbol	Value	Unit
Junction case		R_{thJC}	2.4	K/W
Junction ambient		R_{thJA}	85	K/W

Characteristics

$T_j = 25°C$

Parameter	Test Conditions	Type	Symbol	Min	Typ	Max	Unit
Forward voltage	I_F=5A		V_F			1.9	V
	I_F=5A, T_j=100°C		V_F			1.9	V
Reverse current	V_R=V_{RRM}		I_R			10	µA
	V_R=V_{RRM}, T_j=100°C		I_R			0.2	mA
Forward recovery time	I_F=5A, $di_F/dt \leqq 50A/\mu s$		t_{fr}		350		ns
Turn on transient peak voltage			V_{FP}		7		V
Reverse recovery time	I_F=0.5A, I_R=1A, i_R=0.25A		t_{rr}			120	ns

Typical Characteristics (T_j = 25°C unless otherwise specified)

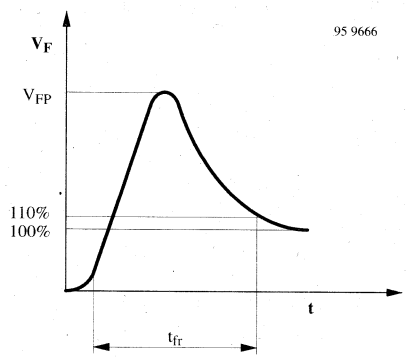

Figure 1. Turn on transient peak voltage

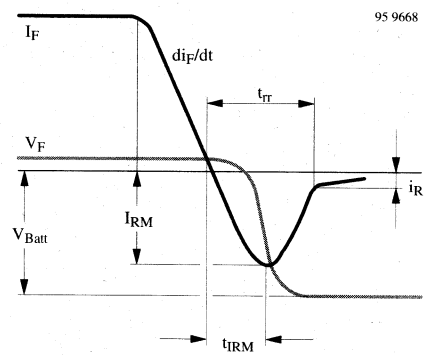

Figure 3. Turn off switching characteristic

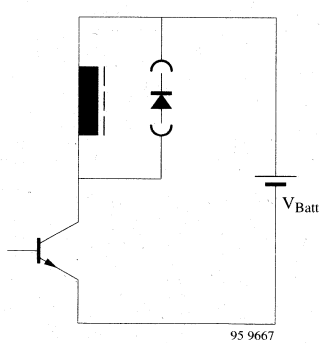

Figure 2. Test circuit

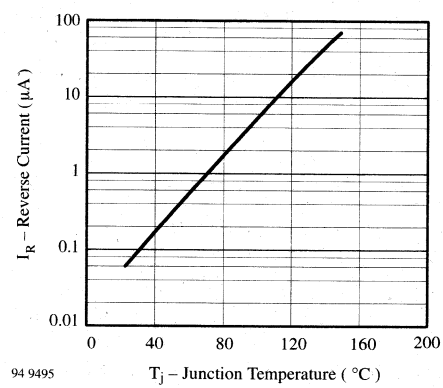

Figure 4. Reverse Current vs. Junction Temperature

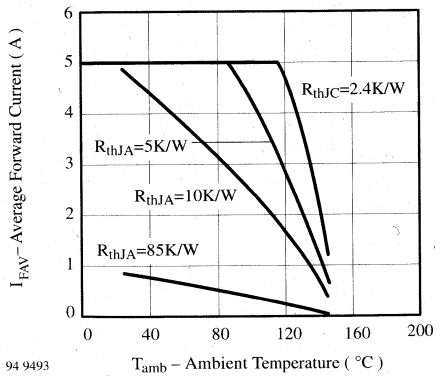

Figure 5. Average Forward Current vs. Ambient Temperature

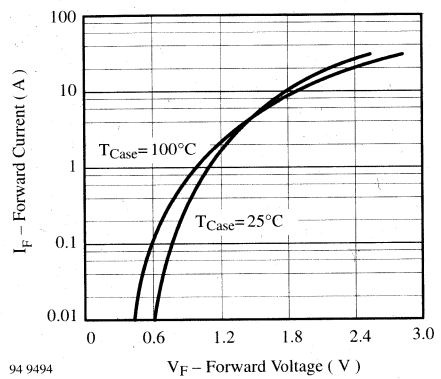

Figure 6. Forward Current vs. Forward Voltage

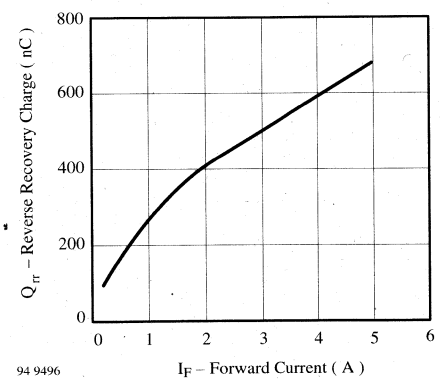

Figure 7. Reverse Recovery Charge vs. Forward Current

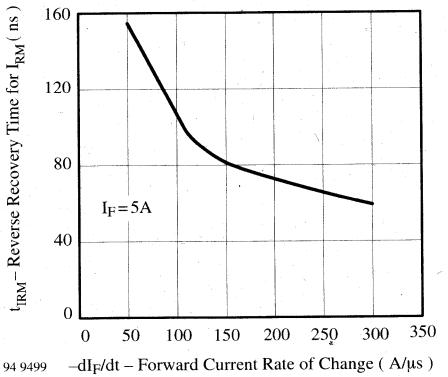

Figure 8. Reverse Recovery Time for IRM vs. Forward Current Rate of Change

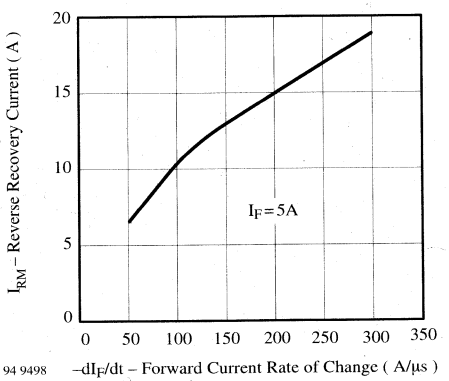

Figure 9. Rev. Recovery Current vs. Forw. Current Rate of Change

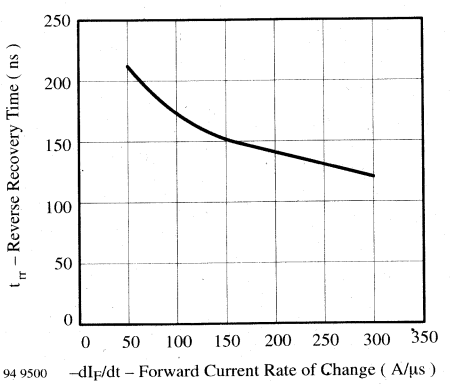

Figure 10. Reverse Recovery Time vs. Forward Current Rate of Change

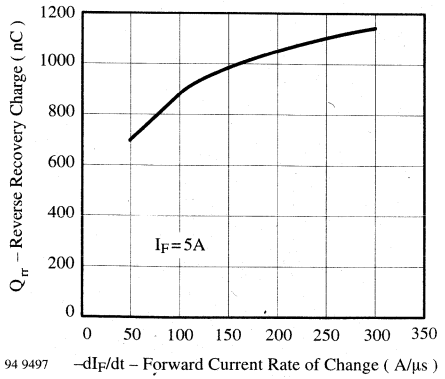

Figure 11. Reverse Recovery Charge vs. Forward Current Rate of Change

Dimensions in mm

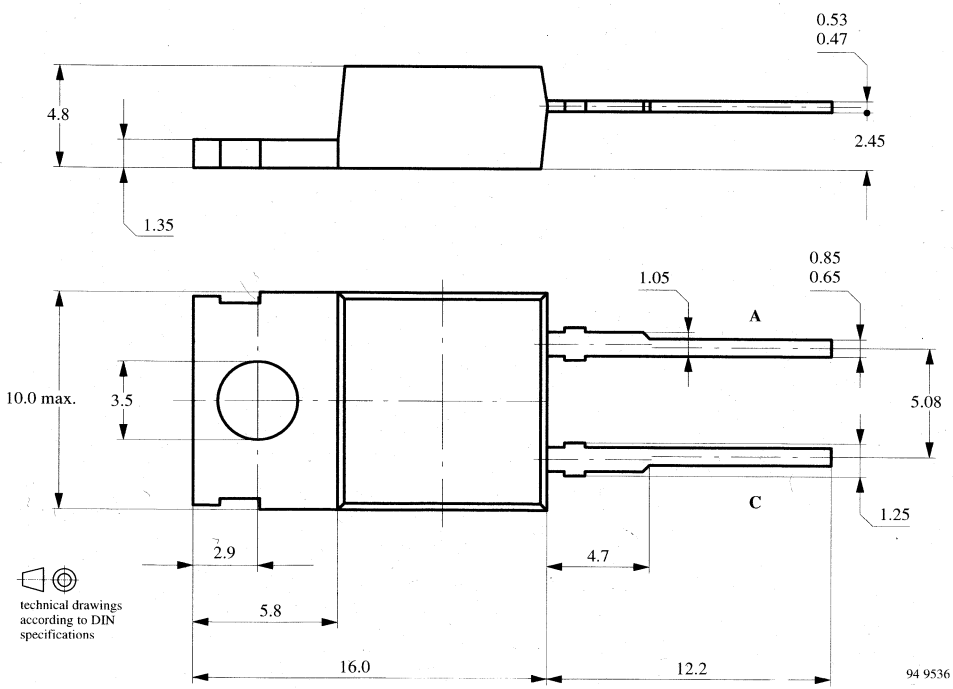

Cathode connected with metallic surface , Plastic Case DO 220 , Weight max.: 2.5 g

Ultra Fast Recovery Silicon Power Rectifier

Features

- Multiple diffusion
- Epitaxial – planar
- Ultra fast forward recovery time
- Ultra fast reverse recovery time
- Low reverse current
- Very good reverse current stability at high temperature
- Low thermal resistance

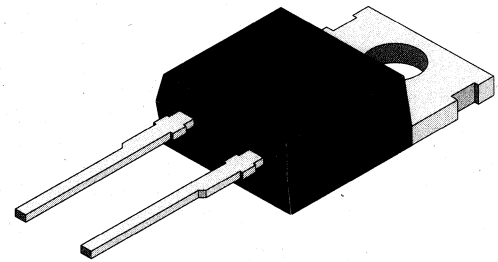

94 9537

Applications

Fast rectifiers in S.M.P.S
Freewheeling diodes and snubber diodes in motor control circuits

Absolute Maximum Ratings

$T_j = 25°C$

Parameter	Test Conditions	Type	Symbol	Value	Unit
Reverse voltage, repetitive peak reverse voltage		BYT108/200	$V_R=V_{RRM}$	200	V
		BYT108/400	$V_R=V_{RRM}$	400	V
Peak forward surge current	t_p=10ms		I_{FSM}	100	A
Repetitive peak forward current			I_{FRM}	40	A
Average forward current			I_{FAV}	8	A
Junction temperature			T_j	150	°C
Storage temperature range			T_{stg}	–55...+150	°C

Maximum Thermal Resistance

$T_j = 25°C$

Parameter	Test Conditions	Symbol	Value	Unit
Junction case		R_{thJC}	2.4	K/W
Junction ambient		R_{thJA}	85	K/W

Characteristics

$T_j = 25°C$

Parameter	Test Conditions	Type	Symbol	Min	Typ	Max	Unit
Forward voltage	I_F=8A		V_F			1.3	V
	I_F=8A, T_j=100°C		V_F			1.2	V
Reverse current	V_R=V_{RRM}		I_R			5	µA
	V_R=V_{RRM}, T_j=150°C		I_R			1	mA
Forward recovery time	I_F=8A, $di_F/dt \leqq 50A/\mu s$		t_{fr}		350		ns
Turn on transient peak voltage			V_{FP}			4	V
Reverse recovery characteristics, see Fig. 3	I_F=8A, $di_F/dt \leqq -50A/\mu s$, V_{Batt}=200V		I_{RM}		5		A
			t_{IRM}		100		ns
Reverse recovery time	I_F=0.5A, I_R=1A, i_R=0.25A	BYT108/200	t_{rr}			35	ns
		BYT108/400	t_{rr}			50	ns
Reverse recovery current	I_F=1A, $di_F/dt \leqq -50A/\mu s$, V_{Batt}=200V		I_{RM}		1.9		A
Reverse recovery time	I_F=1A, $di_F/dt \leqq -50A/\mu s$, V_{Batt}=200V, i_R=0.25xI_{RM}		t_{rr}		58		ns

Typical Characteristics (T_j = 25°C unless otherwise specified)

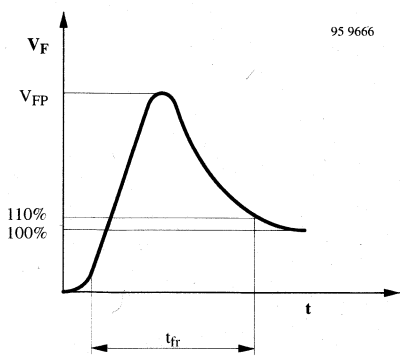

Figure 1. Turn on transient peak voltage

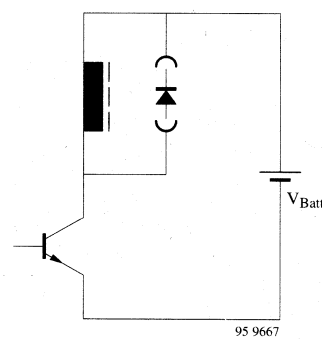

Figure 2. Test circuit

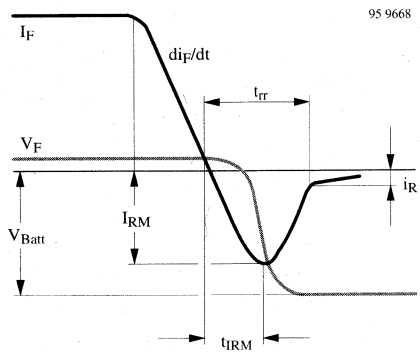

Figure 3. Turn off switching characteristic

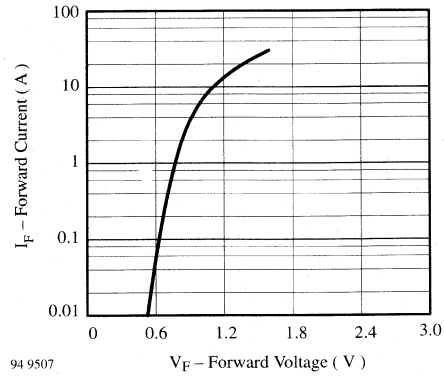

Figure 6. Forward Current vs. Forward Voltage

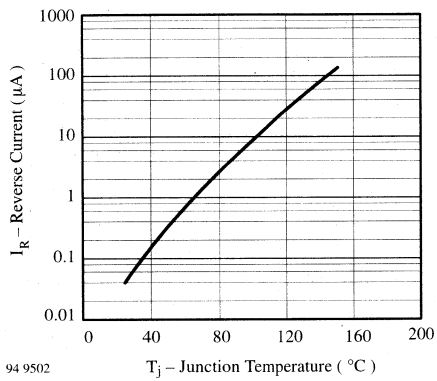

Figure 4. Reverse Current vs. Junction Temperature

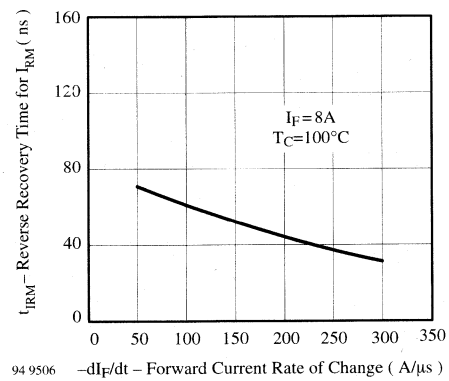

Figure 7. Reverse Recovery Time for IRM vs. Forward Current Rate of Change

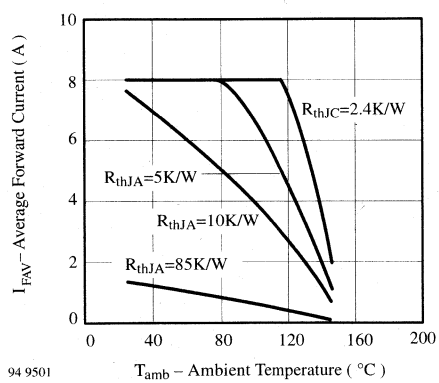

Figure 5. Average Forward Current vs. Ambient Temperature

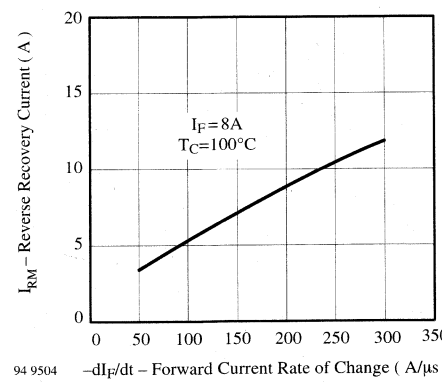

Figure 8. Reverse Recovery Current vs. Forward Current Rate of Change

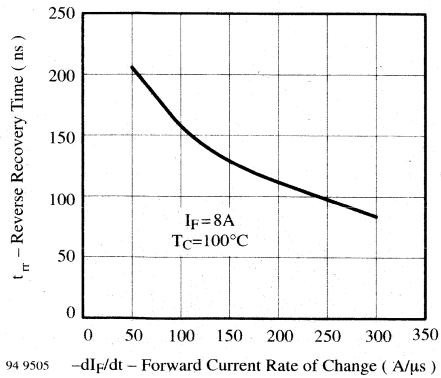

Figure 9. Reverse Recovery Time vs. Forward Current Rate of Change

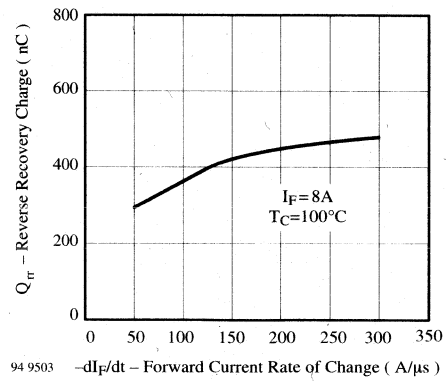

Figure 10. Reverse Recovery Charge vs. Forward Current Rate of Change

Dimensions in mm

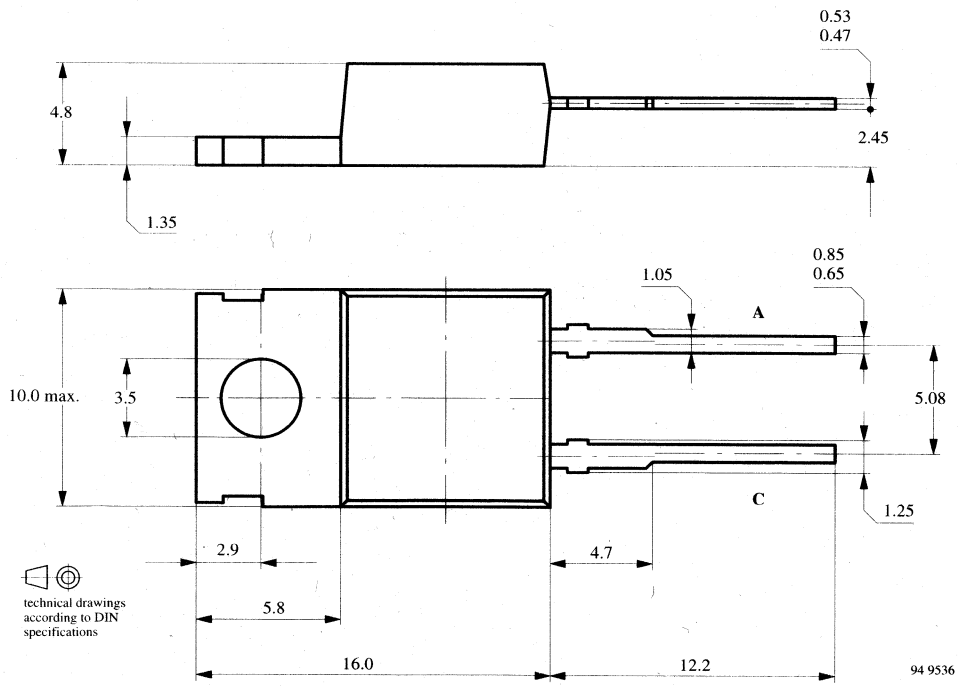

Cathode connected with metallic surface , Plastic Case DO 220 , Weight max.: 2.5 g

BYT115/200/400

Ultra Fast Recovery Silicon Power Rectifier

Features

- Multiple diffusion
- Epitaxial – planar
- Ultra fast forward recovery time
- Ultra fast reverse recovery time
- Low reverse current
- Very good reverse current stability at high temperature
- Low thermal resistance

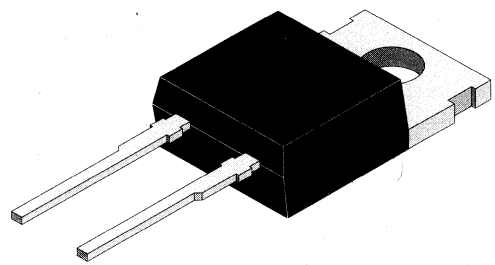

94 9537

Applications

Fast rectifiers in S.M.P.S
Freewheeling diodes and snubber diodes in motor control circuits

Absolute Maximum Ratings

$T_j = 25°C$

Parameter	Test Conditions	Type	Symbol	Value	Unit
Reverse voltage, repetitive peak reverse voltage		BYT115/200	$V_R=V_{RRM}$	200	V
		BYT115/400	$V_R=V_{RRM}$	400	V
Peak forward surge current	t_p=10ms		I_{FSM}	100	A
Repetitive peak forward current			I_{FRM}	30	A
Average forward current			I_{FAV}	15	A
Junction temperature			T_j	150	°C
Storage temperature range			T_{stg}	–55...+150	°C

Maximum Thermal Resistance

$T_j = 25°C$

Parameter	Test Conditions	Symbol	Value	Unit
Junction case		R_{thJC}	1.75	K/W
Junction ambient		R_{thJA}	85	K/W

Characteristics

$T_j = 25°C$

Parameter	Test Conditions	Type	Symbol	Min	Typ	Max	Unit
Forward voltage	I_F=15A		V_F			1.3	V
	I_F=15A, T_j=100°C		V_F			1.2	V
Reverse current	V_R=V_{RRM}		I_R			2	µA
	V_R=V_{RRM}; T_j=100°C		I_R			0.2	mA
Forward recovery time	I_F=15A, $di_F/dt \leqq 50A/\mu s$		t_{fr}		350		ns
Turn on transient peak voltage			V_{FP}			4	V
Reverse recovery characteristics, see Fig. 3	I_F=15A, $di_F/dt \leqq -150A/\mu s$, V_{Batt}=200V		I_{RM}		12		A
			t_{IRM}		75		ns
Reverse recovery time	I_F=15A, $di_F/dt \leqq -150A/\mu s$, V_{Batt}=200V		t_{rr}		140		ns
	I_F=0.5A, I_R=1A, i_R=0.25A	BYT115/200	t_{rr}			35	ns
		BYT115/400	t_{rr}			50	ns

Typical Characteristics (T_j = 25°C unless otherwise specified)

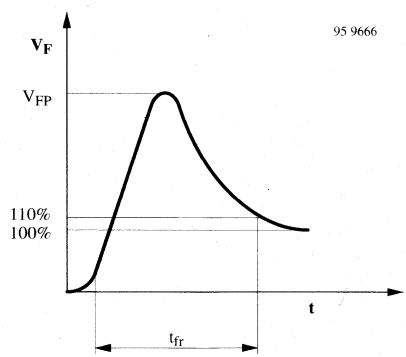

Figure 1. Turn on transient peak voltage

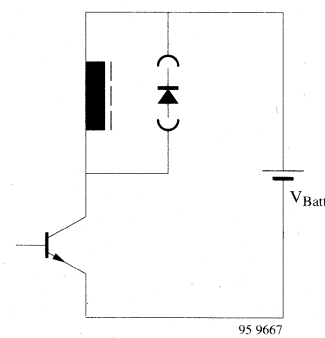

Figure 2. Test circuit

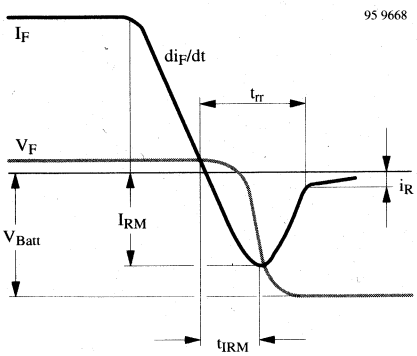

Figure 3. Turn off switching characteristic

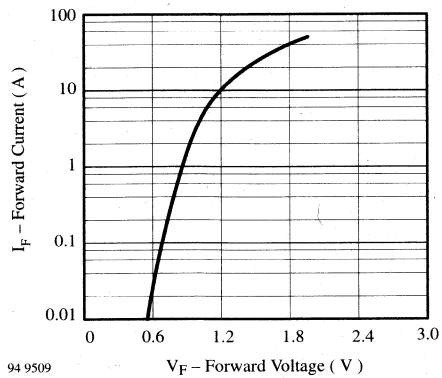

Figure 6. Forward Current vs. Forward Voltage

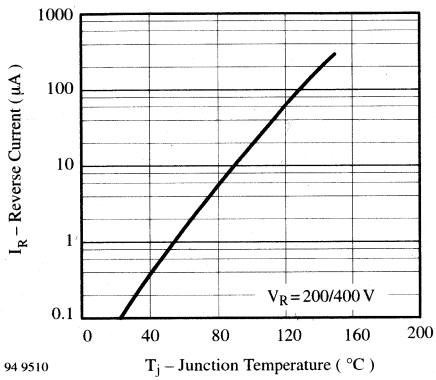

Figure 4. Reverse Current vs. Junction Temperature

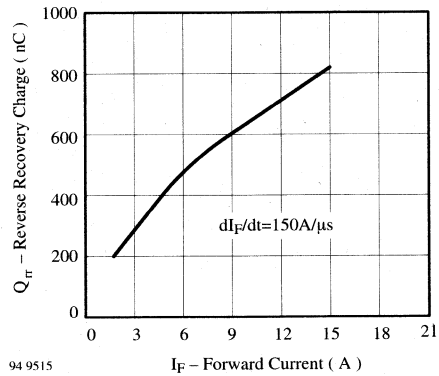

Figure 7. Reverse Recovery Charge vs. Forward Current

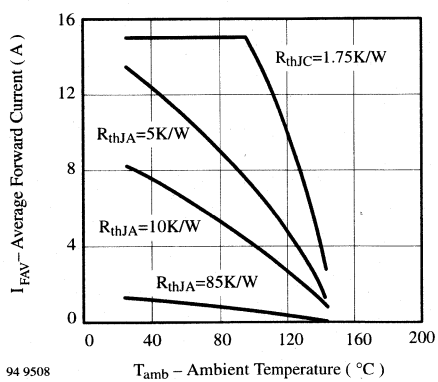

Figure 5. Average Forward Current vs. Ambient Temperature

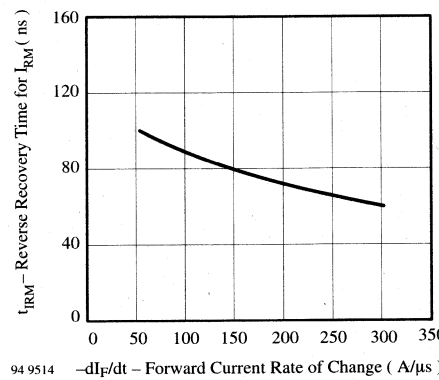

Figure 8. Reverse Recovery Time for IRM vs. Forward Current Rate of Change

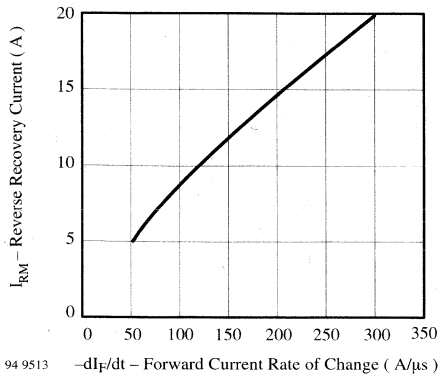

Figure 9. Reverse Recovery Current vs. Forward Current Rate of Change

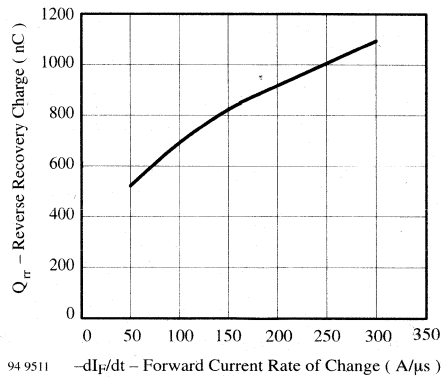

Figure 11. Reverse Recovery Charge vs. Forward Current Rate of Change

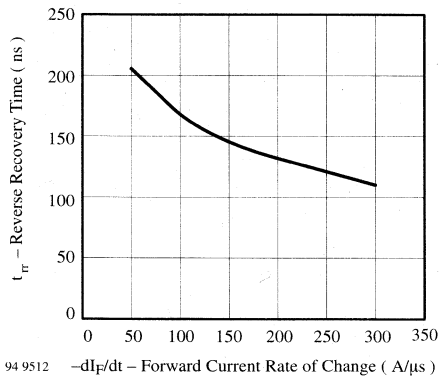

Figure 10. Reverse Recovery Time vs. Forward Current Rate of Change

Dimensions in mm

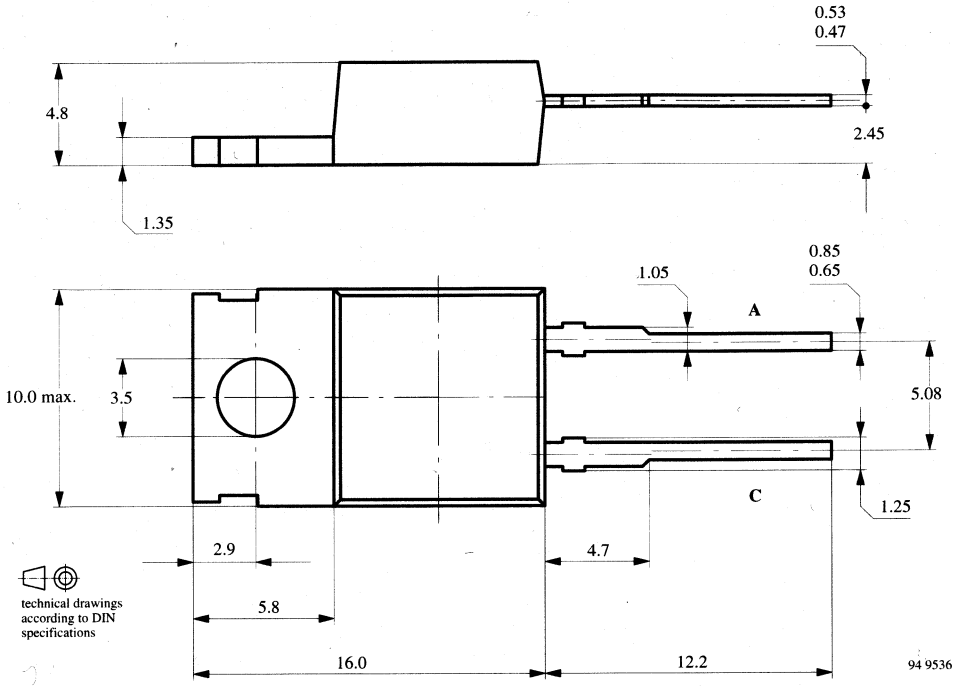

Cathode connected with metallic surface , Plastic Case DO 220 , Weight max.: 2.5 g

Fast Silicon Mesa Rectifiers

Features

- Glass passivated junction
- Hermetically sealed package
- Soft recovery characteristic
- Low reverse current

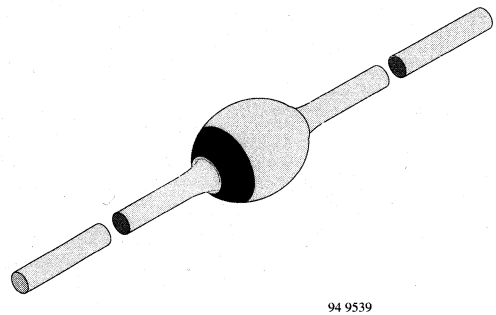

Applications

Fast rectifier and switch for example for TV–line output circuits and switch mode power supply

Absolute Maximum Ratings

$T_j = 25°C$

Parameter	Test Conditions	Type	Symbol	Value	Unit
Reverse voltage, repetitive peak reverse voltage		BYV12	$V_R=V_{RRM}$	100	V
		BYV13	$V_R=V_{RRM}$	400	V
		BYV14	$V_R=V_{RRM}$	600	V
		BYV15	$V_R=V_{RRM}$	800	V
		BYV16	$V_R=V_{RRM}$	1000	V
Peak forward surge current	t_p=10ms		I_{FSM}	40	A
Repetitive peak forward current			I_{FRM}	9	A
Average forward current	φ=180°, T_{amb}=25°C		I_{FAV}	1.5	A
Junction temperature			T_j	175	°C
Storage temperature range			T_{stg}	–65...+175	°C

Maximum Thermal Resistance

$T_j = 25°C$

Parameter	Test Conditions	Symbol	Value	Unit
Junction ambient	l=10mm, T_L=constant	R_{thJA}	45	K/W
	on PC board with spacing 25mm	R_{thJA}	100	K/W

Characteristics

$T_j = 25°C$

Parameter	Test Conditions	Type	Symbol	Min	Typ	Max	Unit
Forward voltage	I_F=1A		V_F			1.5	V
Reverse current	V_R=V_{RRM}		I_R		1	5	µA
	V_R=V_{RRM}, T_j=150°C		I_R		60	150	µA
Reverse recovery time	I_F=0.5A, I_R=1A, i_R=0.25A		t_{rr}			300	ns
Reverse recovery charge	I_F=1A, di/dt=5A/µs		Q_{rr}			200	nC

Typical Characteristics ($T_j = 25°C$ unless otherwise specified)

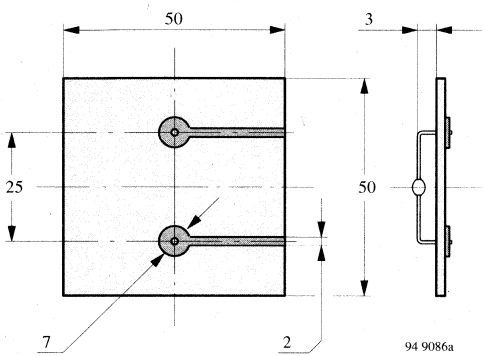

Figure 1. Epoxy glass hard tissue, board thickness 1.5 mm, $R_{thJA} \leqq 100$ K/W

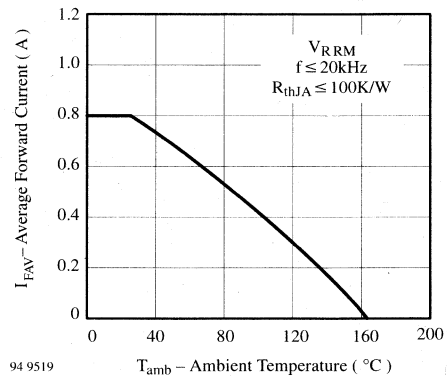

Figure 3. Average Forward Current vs. Ambient Temperature

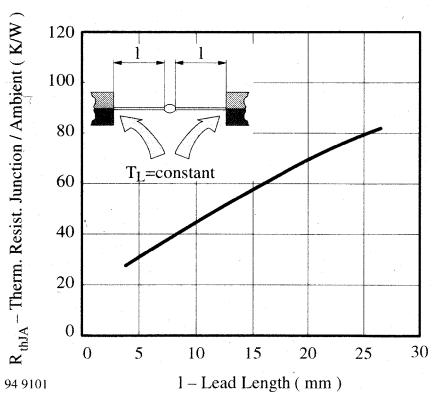

Figure 2. Thermal Resistance vs. Lead Length

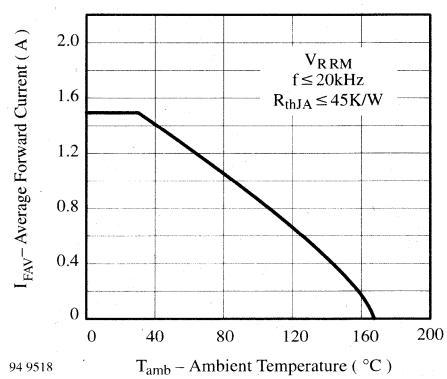

Figure 4. Average Forward Current vs. Ambient Temperature

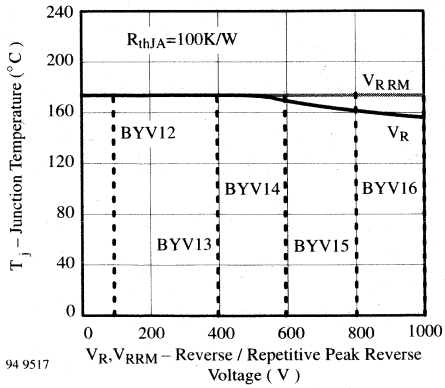

Figure 5. Junction Temperature vs. Reverse/Repetitive Peak Reverse Voltage

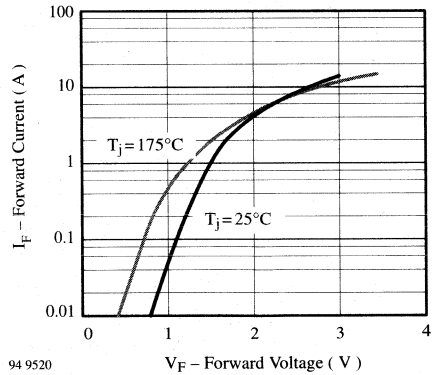

Figure 7. Forward Current vs. Forward Voltage

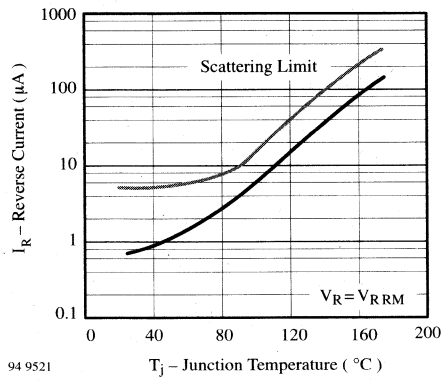

Figure 6. Reverse Current vs. Junction Temperature

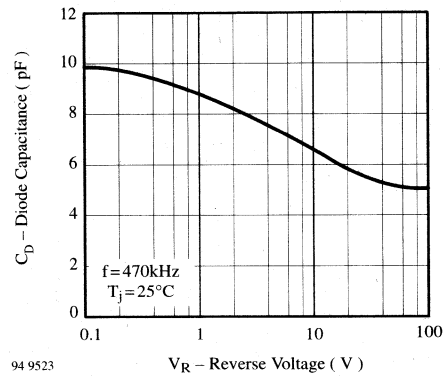

Figure 8. Diode Capacitance vs. Reverse Voltage

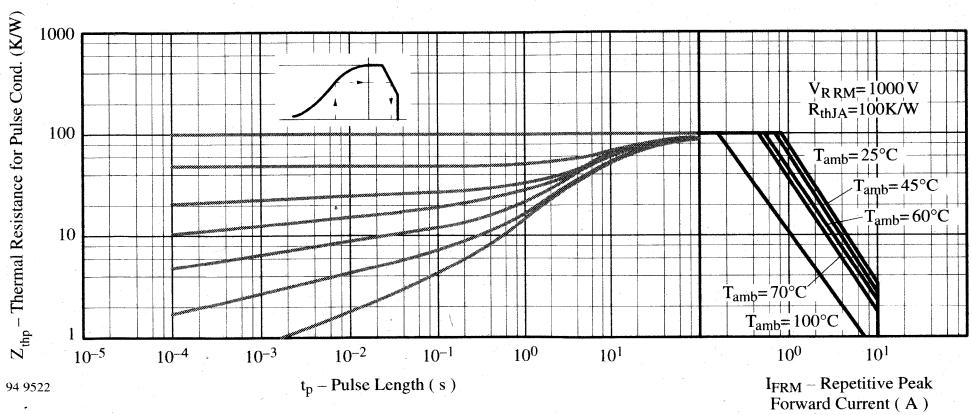

Figure 9. Thermal Response

Dimensions in mm

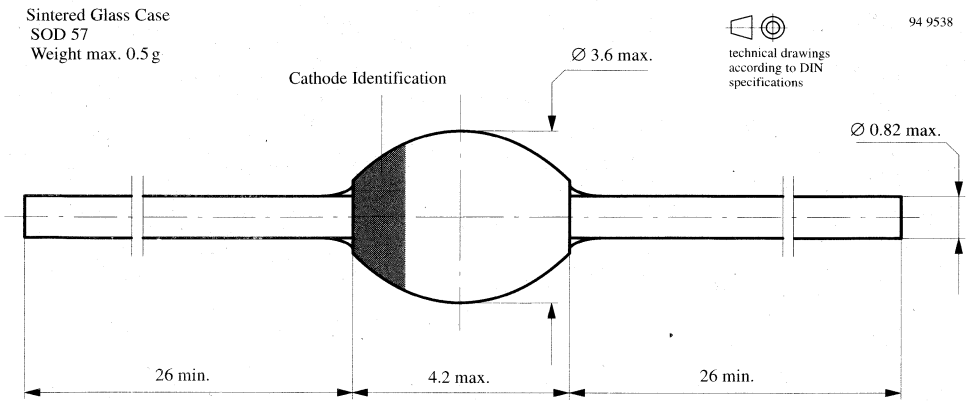

Very Fast Soft–Recovery Avalanche Rectifier

Features

- Glass passivated junction
- Hermetically sealed package
- Very low switching losses
- Low reverse current
- High reverse voltage

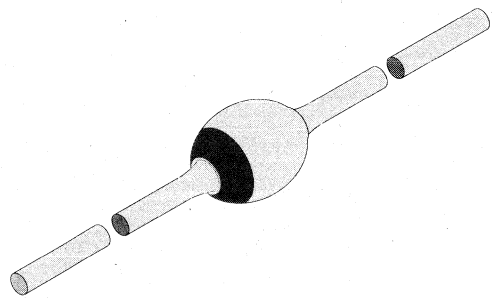

Applications

Switched mode power supplies
High–frequency inverter circuits

Absolute Maximum Ratings

$T_j = 25°C$

Parameter	Test Conditions	Type	Symbol	Value	Unit
Repetitive peak reverse voltage		BYV26A	V_{RRM}	200	V
		BYV26B	V_{RRM}	400	V
		BYV26C	V_{RRM}	600	V
		BYV26D	V_{RRM}	800	V
		BYV26E	V_{RRM}	1000	V
Reverse voltage		BYV26A	V_R	200	V
		BYV26B	V_R	400	V
		BYV26C	V_R	600	V
		BYV26D	V_R	800	V
		BYV26E	V_R	1000	V
Peak forward surge current	t_p=10ms, half sinewave		I_{FSM}	30	A
Average forward current			I_{FAV}	1	A
Non repetitive reverse avalanche energy	$I_{(BR)R}$=400mA, inductive load		E_R	10	mJ
Junction temperature			T_j	175	°C
Storage temperature range			T_{stg}	–55...+175	°C

Maximum Thermal Resistance

$T_j = 25°C$

Parameter	Test Conditions	Symbol	Value	Unit
Junction ambient	l=10mm, T_L=constant	R_{thJA}	45	K/W

Characteristics

$T_j = 25°C$

Parameter	Test Conditions	Type	Symbol	Min	Typ	Max	Unit
Forward voltage	I_F=1A		V_F			2.5	V
	I_F=1A, T_j=175°C		V_F			1.3	V
Reverse current	V_R=V_{RRM}		I_R			5	µA
	V_R=V_{RRM}, T_j=150°C		I_R			100	µA
Reverse breakdown voltage	I_R=100µA	BYV26A	$V_{(BR)R}$	300			V
		BYV26B	$V_{(BR)R}$	500			V
		BYV26C	$V_{(BR)R}$	700			V
		BYV26D	$V_{(BR)R}$	900			V
		BYV26E	$V_{(BR)R}$	1100			V
Reverse recovery time	I_F=0.5A, I_R=1A, i_R=0.25A	BYV26A	t_{rr}			30	ns
		BYV26B	t_{rr}			30	ns
		BYV26C	t_{rr}			30	ns
		BYV26D	t_{rr}			75	ns
		BYV26E	t_{rr}			75	ns
Switching behaviour	I_F=2A, I_{RM}=1A, V_R=400V, Fig. 1		I_{SLP}			–200	mA

Typical Characteristics (T_j = 25°C unless otherwise specified)

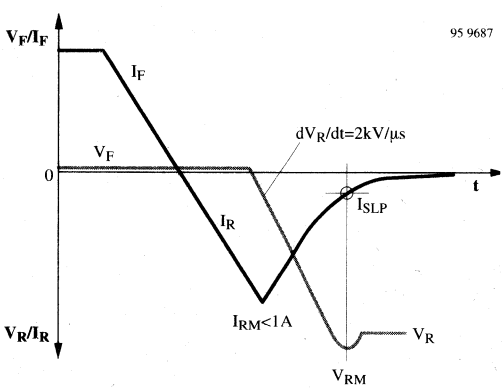

Figure 1. I_{SLP}–Definition

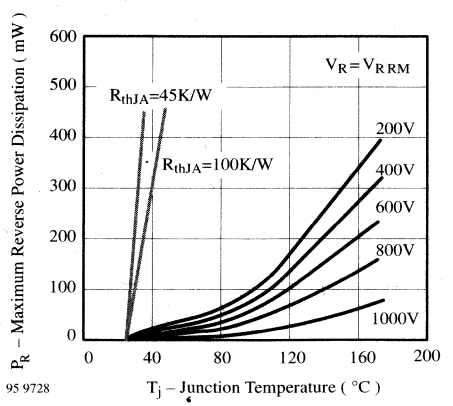

Figure 2. Maximum Reverse Power Dissipation vs. Junction Temperature

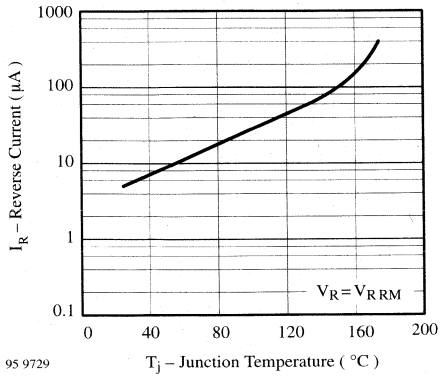

Figure 3. Reverse Current vs. Junction Temperature

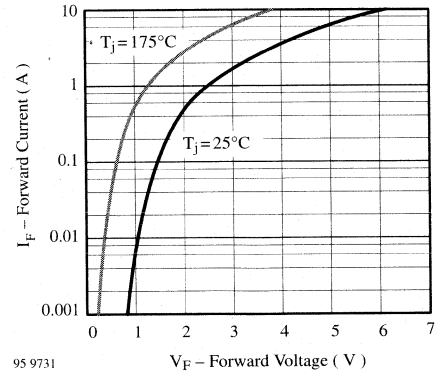

Figure 5. Forward Current vs. Forward Voltage

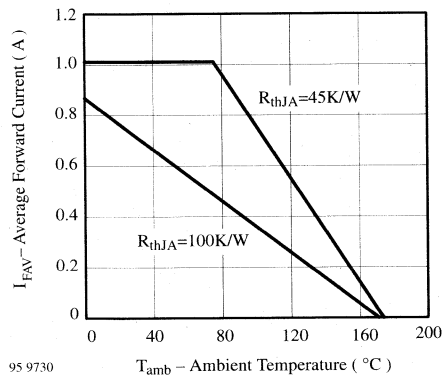

Figure 4. Average Forward Current vs. Ambient Temperature

Dimensions in mm

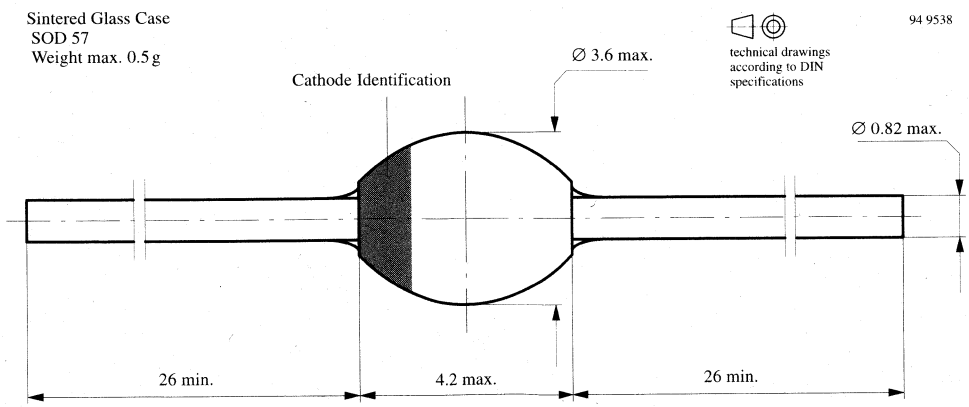

Ultra Fast Silicon Mesa Rectifiers

Features

- Controlled avalanche characteristic
- Low forward voltage
- Ultra fast recovery time
- Glass passivated junction
- Hermetically sealed package

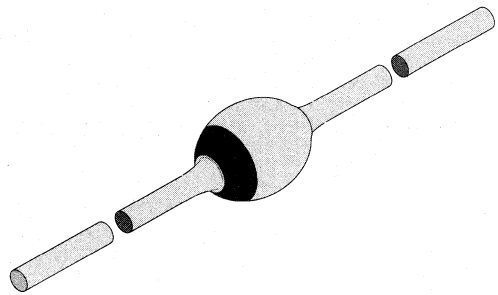

94 9539

Applications

Very fast rectifier e.g. for switch mode power supply

Absolute Maximum Ratings

$T_j = 25°C$

Parameter	Test Conditions	Type	Symbol	Value	Unit
Peak reverse voltage, non repetitive		BYV27/50	V_{RSM}	55	V
		BYV27/100	V_{RSM}	110	V
		BYV27/150	V_{RSM}	165	V
		BYV27/200	V_{RSM}	220	V
Reverse voltage		BYV27/50	$V_R=V_{RRM}$	50	V
		BYV27/100	$V_R=V_{RRM}$	100	V
		BYV27/150	$V_R=V_{RRM}$	150	V
		BYV27/200	$V_R=V_{RRM}$	200	V
Peak forward surge current	t_p=10ms		I_{FSM}	50	A
Repetitive peak forward current			I_{FRM}	15	A
Average forward current			I_{FAV}	2	A
Max. pulse energy in the avalanche mode, non repetitive (inductive load switch off)	$I_{(BR)R}$=0.6A, T_j=175°C		E_R	20	mWs
Junction temperature			T_j	175	°C
Storage temperature range			T_{stg}	–65...+175	°C

Maximum Thermal Resistance

$T_j = 25°C$

Parameter	Test Conditions	Symbol	Value	Unit
Junction ambient	l=10mm, T_L=constant	R_{thJA}	45	K/W
	on PC board with spacing 25mm	R_{thJA}	100	K/W

Characteristics

$T_j = 25°C$

Parameter	Test Conditions	Type	Symbol	Min	Typ	Max	Unit
Forward voltage	I_F=3A		V_F			1.07	V
	I_F=3A, T_j=175°C		V_F			0.88	V
Reverse current	V_R=V_{RRM}		I_R			1	µA
	V_{RSM}		I_R			100	µA
	V_R=V_{RRM}, T_j=165°C		I_R			150	µA
Reverse recovery time	I_F=0.5A, I_R=1A, i_R=0.25A		t_{rr}			25	ns

Typical Characteristics (T_j = 25°C unless otherwise specified)

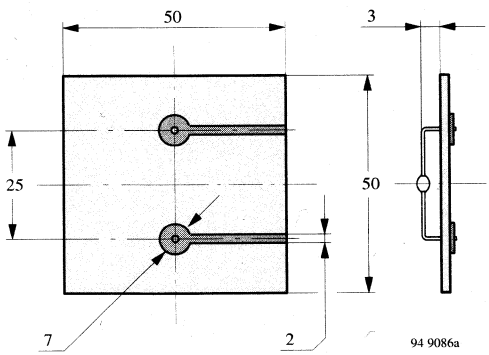

Figure 1. Epoxy glass hard tissue, board thickness 1.5 mm, $R_{thJA} \leqq 100$ K/W

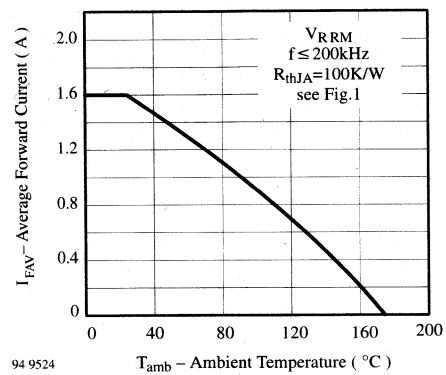

Figure 3. Average Forward Current vs. Ambient Temperature

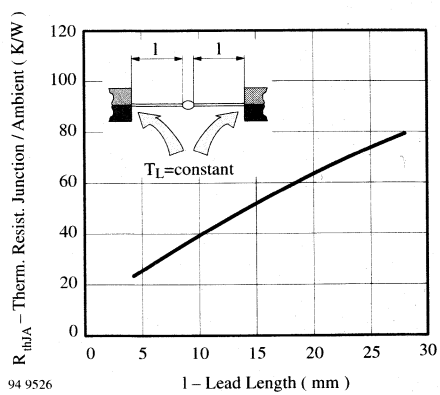

Figure 2. Thermal Resistance vs. Lead Length

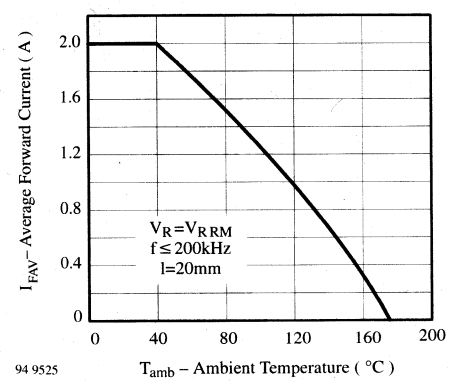

Figure 4. Average Forward Current vs. Ambient Temperature

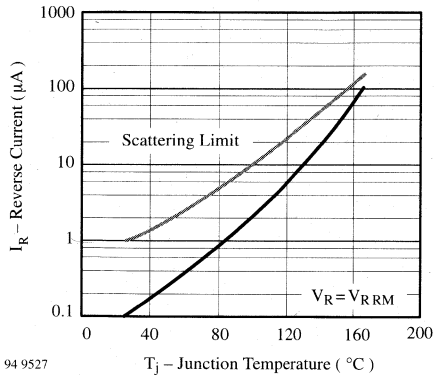

Figure 5. Reverse Current vs. Junction Temperature

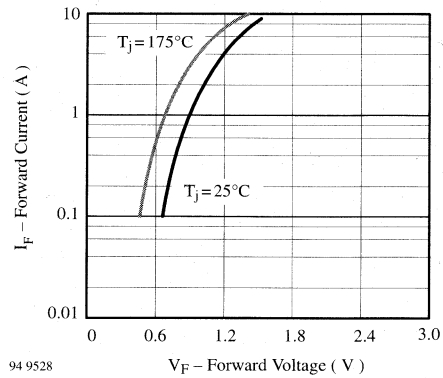

Figure 6. Forward Current vs. Forward Voltage

Dimensions in mm

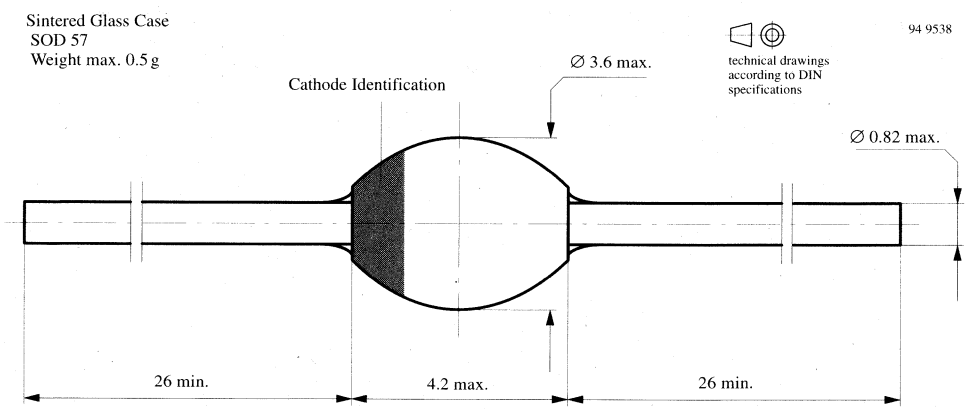

Ultra Fast Silicon Mesa Rectifiers

Features

- Controlled avalanche characteristic
- Low forward voltage
- Ultra fast recovery time
- Glass passivated junction
- Hermetically sealed package

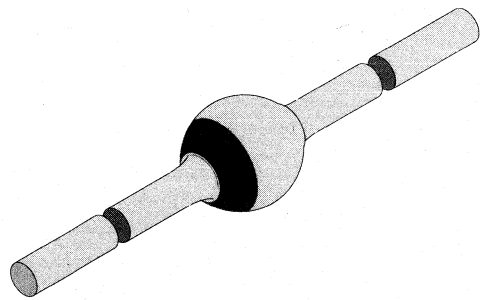

94 9588

Applications

Very fast rectifier e.g. for switch mode power supply

Absolute Maximum Ratings

$T_j = 25°C$

Parameter	Test Conditions	Type	Symbol	Value	Unit
Peak reverse voltage, non repetitive		BYV28/50	V_{RSM}	55	V
		BYV28/100	V_{RSM}	110	V
		BYV28/150	V_{RSM}	165	V
		BYV28/200	V_{RSM}	220	V
Reverse voltage		BYV28/50	$V_R=V_{RRM}$	50	V
		BYV28/100	$V_R=V_{RRM}$	100	V
		BYV28/150	$V_R=V_{RRM}$	150	V
		BYV28/200	$V_R=V_{RRM}$	200	V
Peak forward surge current	t_p=10ms		I_{FSM}	90	A
Repetitive peak forward current			I_{FRM}	25	A
Average forward current			I_{FAV}	3.5	A
Max. pulse energy in the avalanche mode, non repetitive (inductive load switch off)	$I_{(BR)R}$=0.6A, T_j=175°C		E_R	20	mWs
Junction temperature			T_j	175	°C
Storage temperature range			T_{stg}	–65...+175	°C

Maximum Thermal Resistance

$T_j = 25°C$

Parameter	Test Conditions	Symbol	Value	Unit
Junction ambient	l=10mm, T_L=constant	R_{thJA}	25	K/W
	on PC board with spacing 37.5mm	R_{thJA}	70	K/W

Characteristics

$T_j = 25°C$

Parameter	Test Conditions	Type	Symbol	Min	Typ	Max	Unit
Forward voltage	I_F=5A		V_F			1.1	V
	I_F=5A, T_j=175°C		V_F			0.89	V
Reverse current	V_R=V_{RRM}		I_R			1	µA
	V_{RSM}		I_R			100	µA
	V_R=V_{RRM}, T_j=165°C		I_R			150	µA
Reverse recovery time	I_F=0.5A, I_R=1A, i_R=0.25A		t_{rr}			30	ns

Typical Characteristics ($T_j = 25°C$ unless otherwise specified)

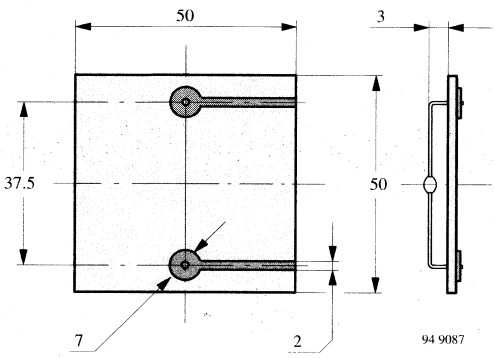

Figure 1. Epoxy glass hard tissue, board thickness 1.5 mm, $R_{thJA} \leqq 70$ K/W

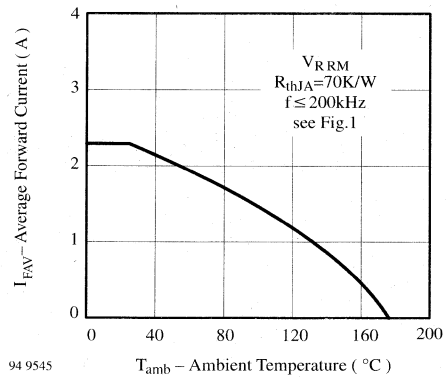

Figure 3. Average Forward Current vs. Ambient Temperature

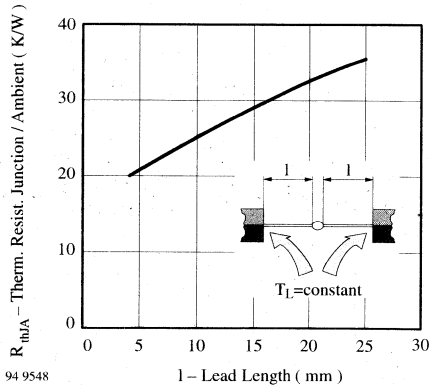

Figure 2. Thermal Resistance vs. Lead Length

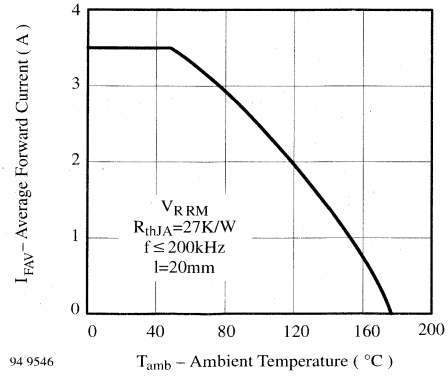

Figure 4. Average Forward Current vs. Ambient Temperature

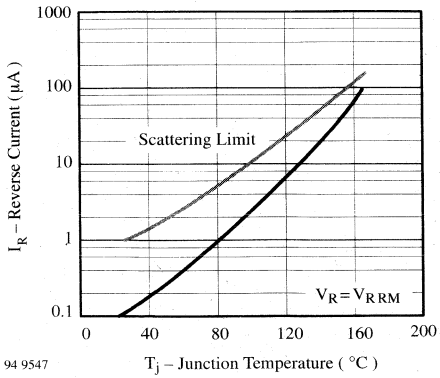

Figure 5. Reverse Current vs. Junction Temperature

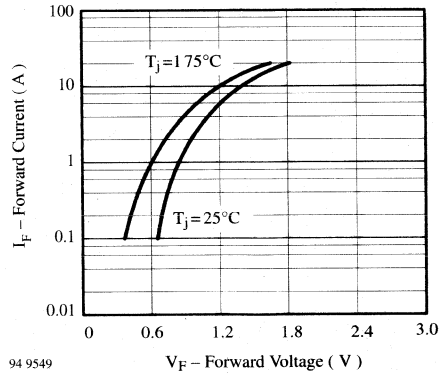

Figure 6. Forward Current vs. Forward Voltage

Dimensions in mm

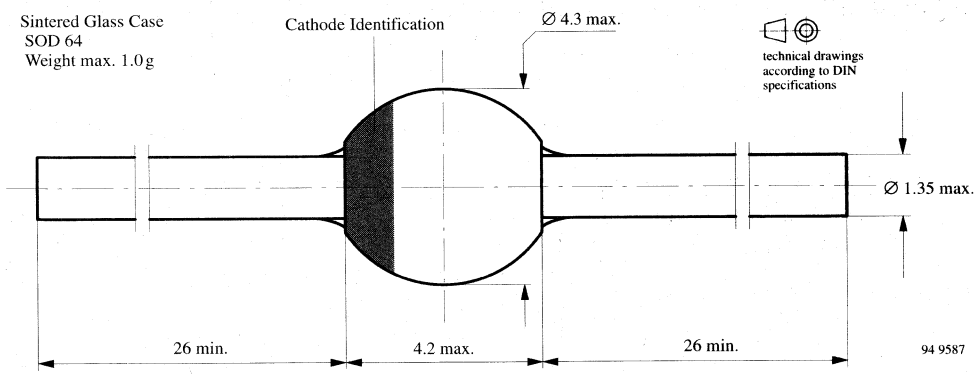

Fast Silicon Mesa Rectifiers

Features

- Glass passivated junction
- Hermetically sealed package
- Low reverse current
- Soft recovery characteristics

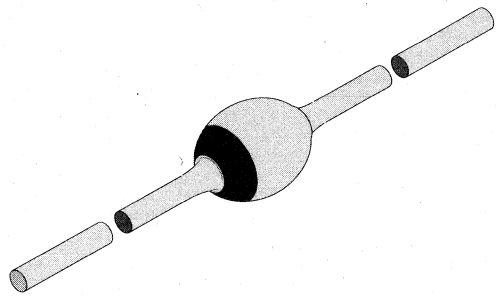

94 9539

Applications

Fast "soft recovery" rectifier

Absolute Maximum Ratings

$T_j = 25°C$

Parameter	Test Conditions	Type	Symbol	Value	Unit
Reverse voltage		BYV37	V_R	800	V
		BYV38	V_R	1000	V
Peak forward surge current	t_p=10ms		I_{FSM}	50	A
Average forward current			I_{FAV}	2	A
Junction temperature			T_j	175	°C
Storage temperature range			T_{stg}	–65...+175	°C

Maximum Thermal Resistance

$T_j = 25°C$

Parameter	Test Conditions	Symbol	Value	Unit
Junction ambient	l=10mm, T_L=constant	R_{thJA}	45	K/W
	on PC board with spacing 25mm	R_{thJA}	100	K/W

Characteristics

$T_j = 25°C$

Parameter	Test Conditions	Type	Symbol	Min	Typ	Max	Unit
Forward voltage	I_F=1A		V_F		1.0	1.1	V
Reverse current	V_R		I_R		1	5	µA
	V_R, T_j=150°C		I_R		60	150	µA
Reverse recovery time	I_F=0.5A, I_R=1A, i_R=0.25A		t_{rr}			300	ns

Typical Characteristics (T_j = 25°C unless otherwise specified)

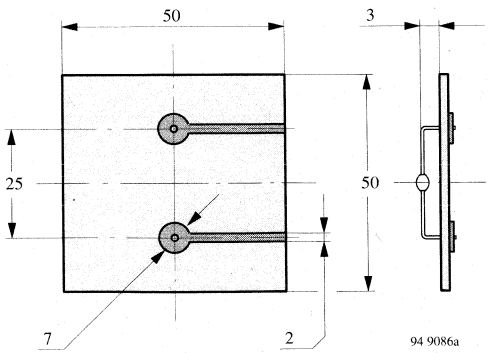

Figure 1. Epoxy glass hard tissue, board thickness 1.5 mm, $R_{thJA} \leqq 100$ K/W

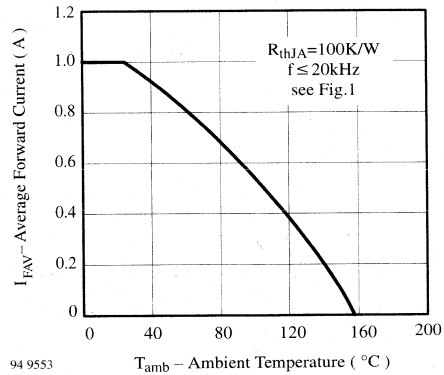

Figure 3. Average Forward Current vs. Ambient Temperature

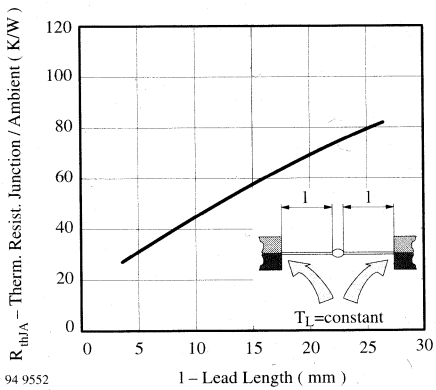

Figure 2. Thermal Resistance vs. Lead Length

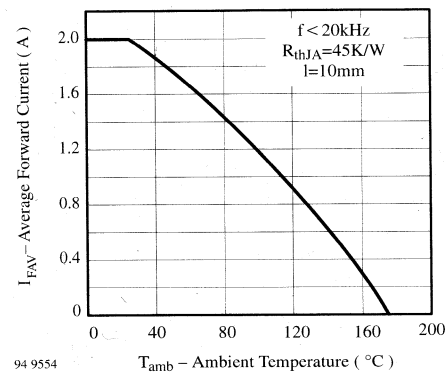

Figure 4. Average Forward Current vs. Ambient Temperature

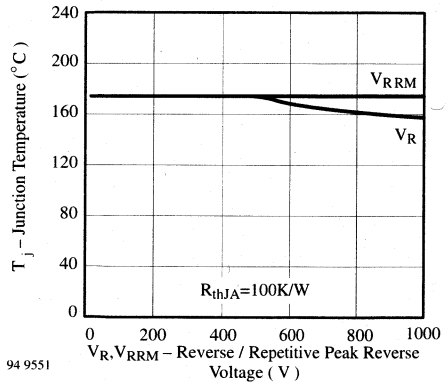

Figure 5. Junction Temperature vs. Reverse/Repetitive Peak Reverse Voltage

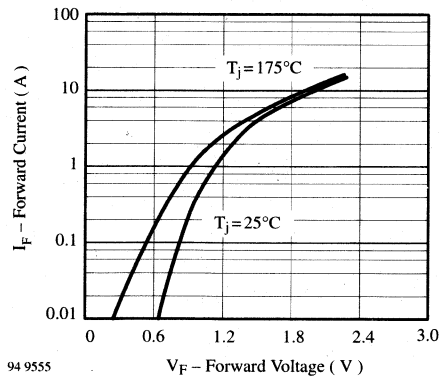

Figure 7. Forward Current vs. Forward Voltage

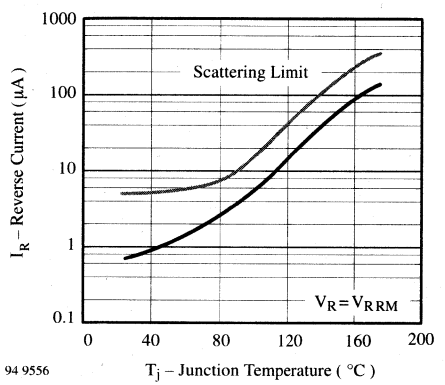

Figure 6. Reverse Current vs. Junction Temperature

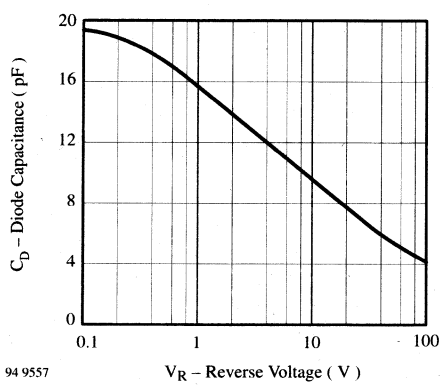

Figure 8. Diode Capacitance vs. Reverse Voltage

Dimensions in mm

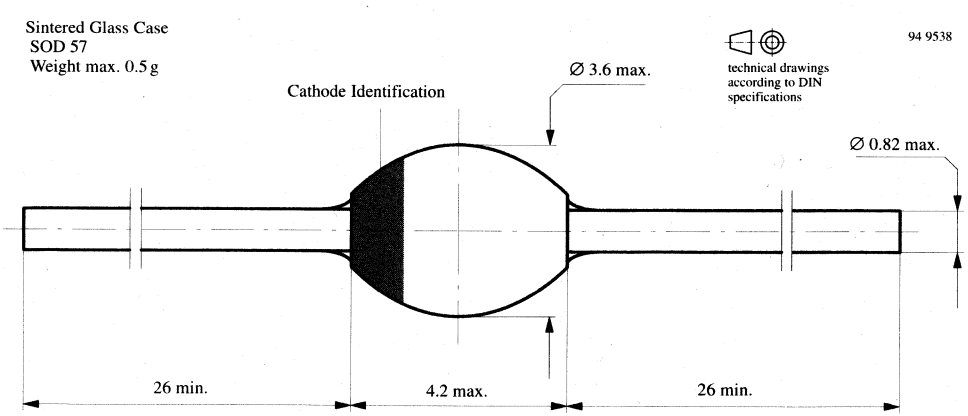

Fast Silicon Mesa Rectifiers

Features

- Glass passivated junction
- Hermetically sealed package
- Low reverse current
- Soft recovery characteristics

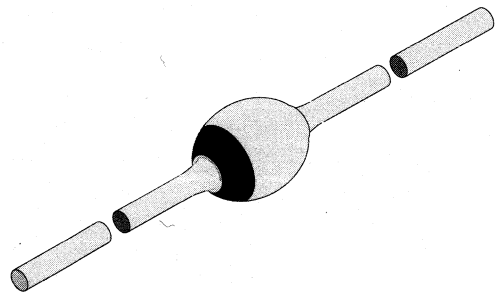

94 9539

Applications

Fast rectifier and switch for example for TV–line output circuits and switch mode power supply

Absolute Maximum Ratings

$T_j = 25°C$

Parameter	Test Conditions	Type	Symbol	Value	Unit
Reverse voltage, repetitive peak reverse voltage		BYW32	$V_R=V_{RRM}$	200	V
		BYW33	$V_R=V_{RRM}$	300	V
		BYW34	$V_R=V_{RRM}$	400	V
		BYW35	$V_R=V_{RRM}$	500	V
		BYW36	V_R	600	V
Peak forward surge current	t_p=10ms		I_{FSM}	50	A
Repetitive peak forward current			I_{FRM}	12	A
Average forward current	φ=180°		I_{FAV}	2	A
Junction temperature			T_j	175	°C
Storage temperature range			T_{stg}	–55...+175	°C

Maximum Thermal Resistance

$T_j = 25°C$

Parameter	Test Conditions	Symbol	Value	Unit
Junction ambient	l=10mm, T_L=constant	R_{thJA}	45	K/W
	on PC board with spacing 25mm	R_{thJA}	100	K/W

Characteristics

$T_j = 25°C$

Parameter	Test Conditions	Type	Symbol	Min	Typ	Max	Unit
Forward voltage	I_F=1A		V_F		0.95	1.1	V
Reverse current	V_R=V_{RRM}		I_R		1	5	µA
	V_R=V_{RRM}, T_j=150°C		I_R		60	150	µA
Reverse recovery time	I_F=0.5A, I_R=1A, i_R=0.25A		t_{rr}			200	ns

Typical Characteristics ($T_j = 25°C$ unless otherwise specified)

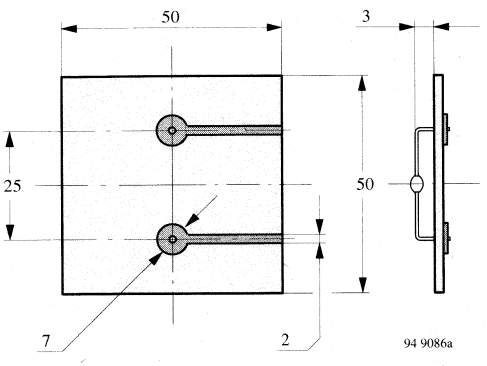

Figure 1. Epoxy glass hard tissue, board thickness 1.5 mm, $R_{thJA} \leqq 100$ K/W

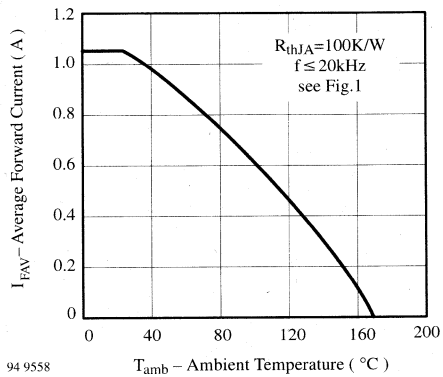

Figure 3. Average Forward Current vs. Ambient Temperature

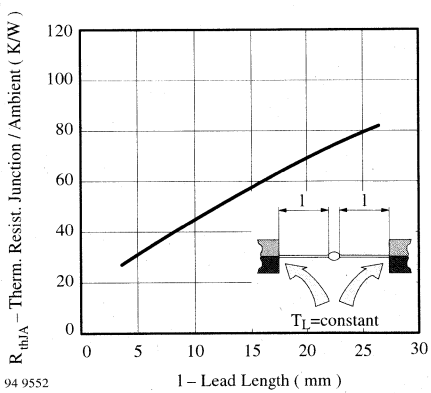

Figure 2. Thermal Resistance vs. Lead Length

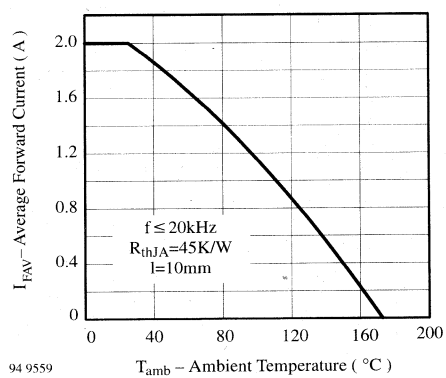

Figure 4. Average Forward Current vs. Ambient Temperature

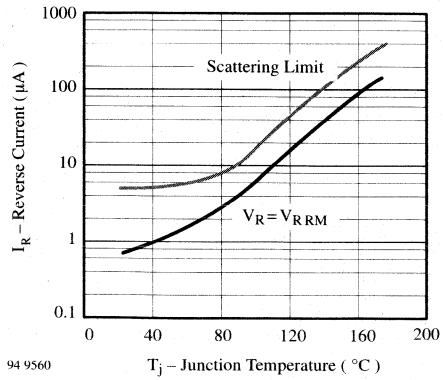

Figure 5. Reverse Current vs. Junction Temperature

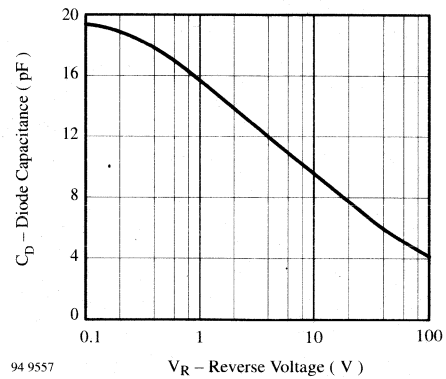

Figure 7. Diode Capacitance vs. Reverse Voltage

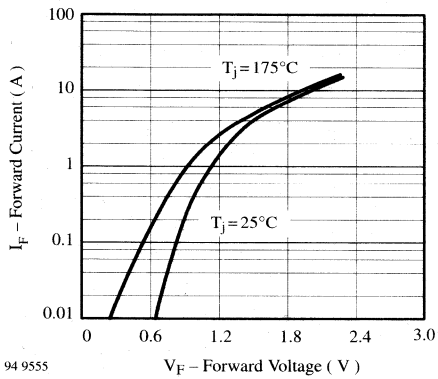

Figure 6. Forward Current vs. Forward Voltage

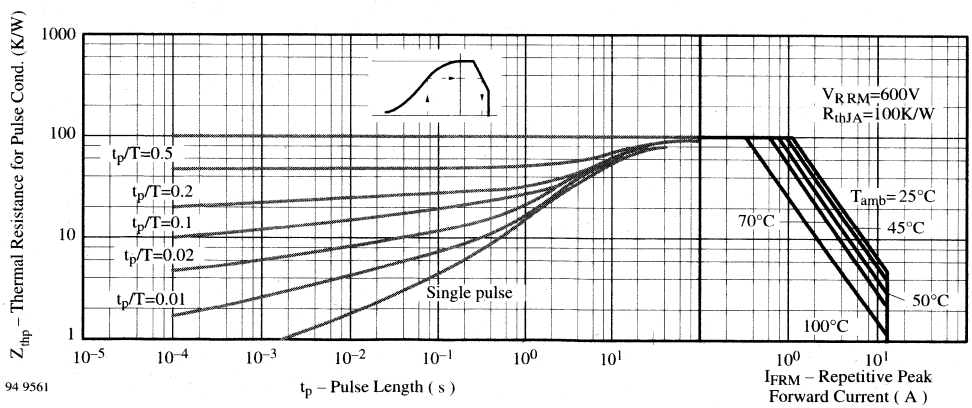

Figure 8. Thermal Response

Dimensions in mm

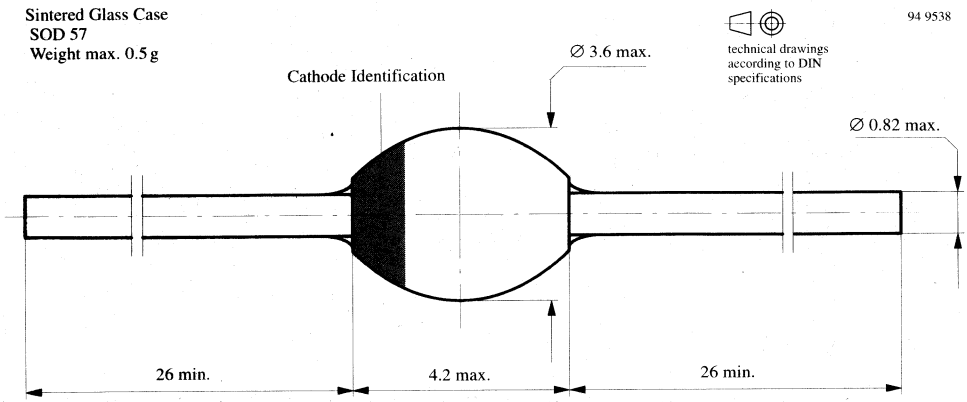

Silicon Mesa Rectifiers

Features

- Controlled avalanche characteristics
- Glass passivated junction
- Hermetically sealed package
- Low reverse current
- High surge current loading
- Electrically equivalent diodes:
  BYW52 – 1N5059 BYW53 – 1N5060
  BYW54 – 1N5061 BYW55 – 1N5062

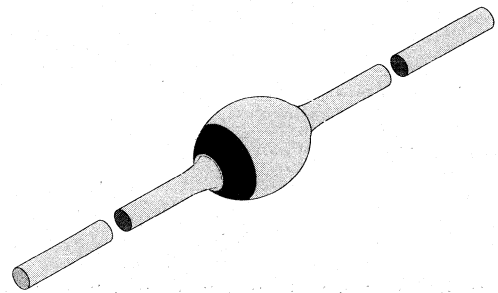

Applications

Rectifier, general purpose

Absolute Maximum Ratings

T_j = 25°C

Parameter	Test Conditions	Type	Symbol	Value	Unit
Reverse voltage, repetitive peak reverse voltage		BYW52	$V_R=V_{RRM}$	200	V
		BYW53	$V_R=V_{RRM}$	400	V
		BYW54	$V_R=V_{RRM}$	600	V
		BYW55	$V_R=V_{RRM}$	800	V
		BYW56	$V_R=V_{RRM}$	1000	V
Peak forward surge current	t_p=10ms		I_{FSM}	50	A
Repetitive peak forward current			I_{FRM}	12	A
Average forward current	φ=180°		I_{FAV}	2	A
Pulse avalanche peak power	t_p=20µs half sinus wave, T_j=175°C		P_R	1000	W
Max. pulse energy in the avalanche mode, non repetitive (inductive load switch off)	$I_{(BR)R}$=1A, T_j=175°C		E_R	20	mWs
i^2* t–rating			i^2*t	8	A^2*s
Junction temperature			T_j	175	°C
Storage temperature range			T_{stg}	–55...+175	°C

Maximum Thermal Resistance

T_j = 25°C

Parameter	Test Conditions	Symbol	Value	Unit
Junction ambient	l=10mm, T_L=constant	R_{thJA}	45	K/W
	on PC board with spacing 25mm	R_{thJA}	100	K/W

Characteristics

$T_j = 25°C$

Parameter	Test Conditions	Type	Symbol	Min	Typ	Max	Unit
Forward voltage	I_F=1A		V_F		0.9	1.0	V
Reverse current	V_R=V_{RRM}		I_R		0.1	1	µA
	V_R=V_{RRM}, T_j=100°C		I_R		5	10	µA
Breakdown voltage	I_R=100µA, t_p/T=0.01, t_p=0.3ms		$V_{(BR)}$			1600	V
Diode capacitance	V_R=0, f=0.47MHz		C_D		50		pF
Reverse recovery time	I_F=0.5A, I_R=1A, i_R=0.25A		t_{rr}			4	µs
	I_F=1A, di/dt=5A/µs, V_R=50V		t_{rr}			4	µs
Reverse recovery charge	I_F=1A, di/dt=5A/µs		Q_{rr}			200	nC

Typical Characteristics ($T_j = 25°C$ unless otherwise specified)

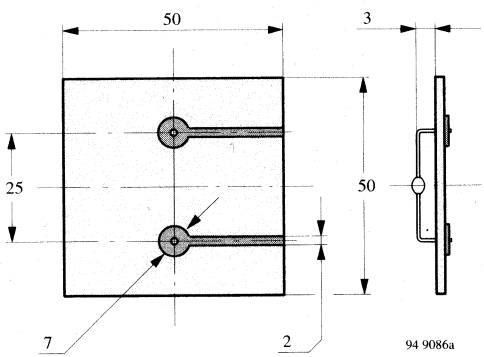

Figure 1. Epoxy glass hard tissue, board thickness 1.5 mm, $R_{thJA} \leqq 100$ K/W

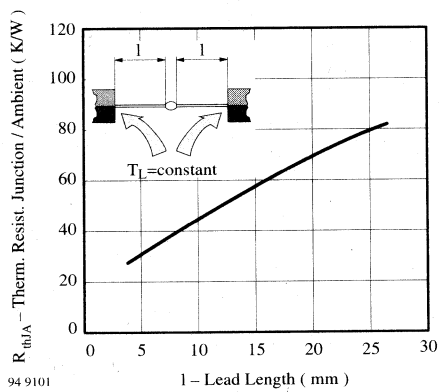

Figure 2. Thermal Resistance vs. Lead Length

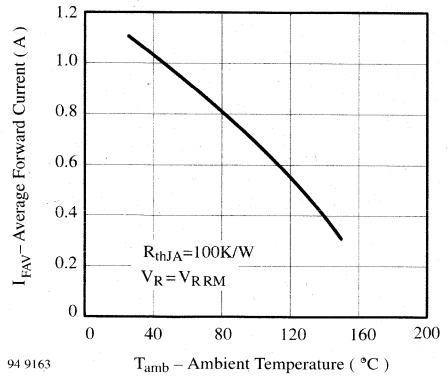

Figure 3. Average Forward Current vs. Ambient Temperature

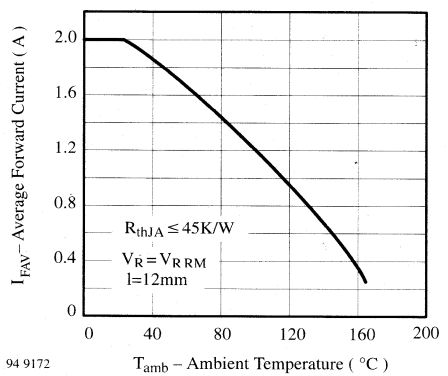

Figure 4. Average Forward Current vs. Ambient Temperature

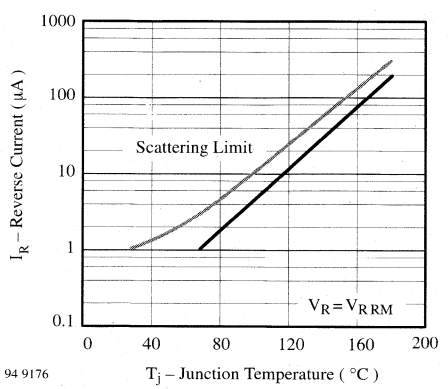

Figure 5. Reverse Current vs. Junction Temperature

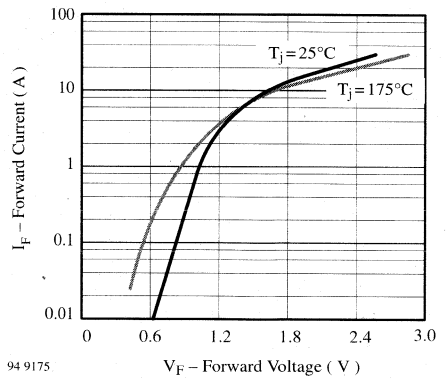

Figure 6. Forward Current vs. Forward Voltage

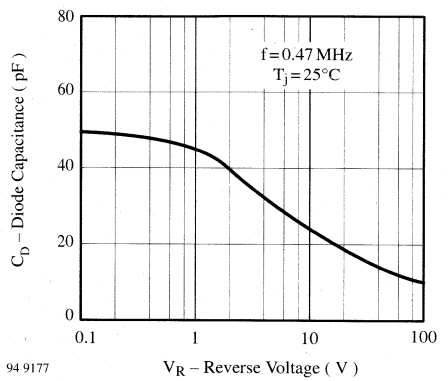

Figure 7. Diode Capacitance vs. Reverse Voltage

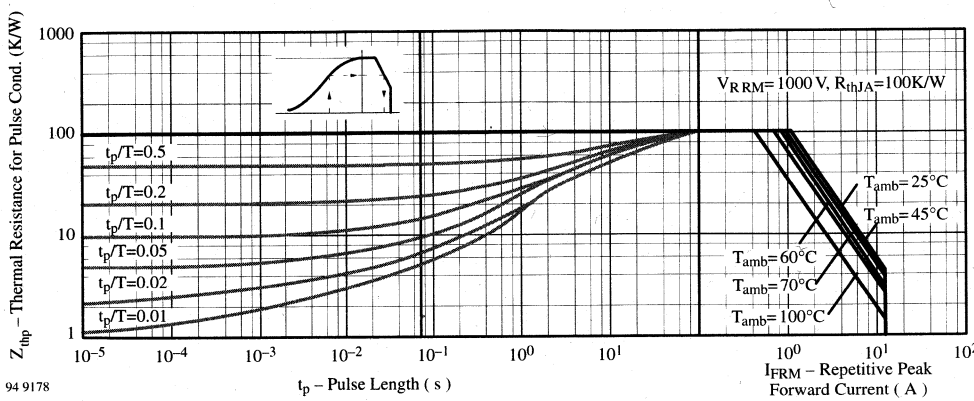

Figure 8. Thermal Response

Dimensions in mm

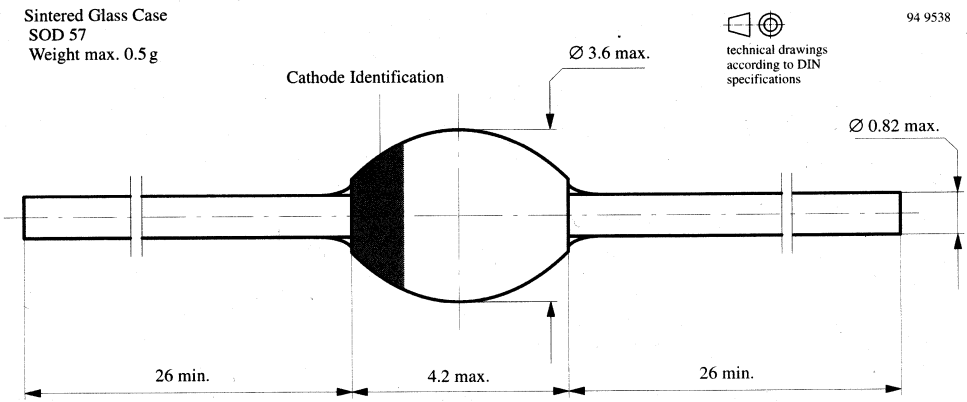

BYW72...BYW76

Fast Silicon Mesa Rectifiers

Features

- Glass passivated junction
- Hermetically sealed package
- Low reverse current
- Soft recovery characteristics

Applications

Fast rectifier and switch for example for TV–line output circuits and switch mode power supply

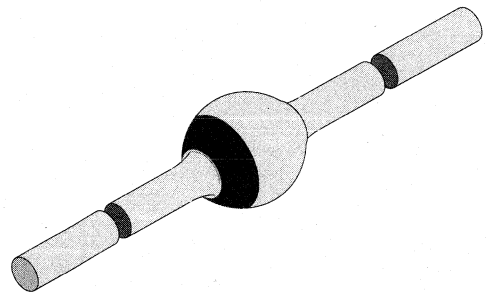

94 9588

Absolute Maximum Ratings

$T_j = 25°C$

Parameter	Test Conditions	Type	Symbol	Value	Unit
Reverse voltage, repetitive peak reverse voltage		BYW72	$V_R=V_{RRM}$	200	V
		BYW73	$V_R=V_{RRM}$	300	V
		BYW74	$V_R=V_{RRM}$	400	V
		BYW75	$V_R=V_{RRM}$	500	V
		BYW76	$V_R=V_{RRM}$	600	V
Peak forward surge current	t_p=10ms		I_{FSM}	100	A
Repetitive peak forward current			I_{FRM}	15	A
Average forward current	$T_{amb} \leqq 45°C$		I_{FAV}	3	A
Junction temperature			T_j	175	°C
Storage temperature range			T_{stg}	–65...+175	°C

Maximum Thermal Resistance

$T_j = 25°C$

Parameter	Test Conditions	Symbol	Value	Unit
Junction ambient	l=10mm, T_L=constant	R_{thJA}	25	K/W
	on PC board with spacing 37.5mm	R_{thJA}	70	K/W

Characteristics

$T_j = 25°C$

Parameter	Test Conditions	Type	Symbol	Min	Typ	Max	Unit
Forward voltage	I_F=3A		V_F		0.95	1.1	V
Reverse current	$V_R=V_{RRM}$		I_R		1	5	µA
	$V_R=V_{RRM}$, T_j=150°C		I_R		60	150	µA
Reverse recovery time	I_F=0.5A, I_R=1A, i_R=0.25A		t_{rr}			200	ns

Typical Characteristics (T_j = 25°C unless otherwise specified)

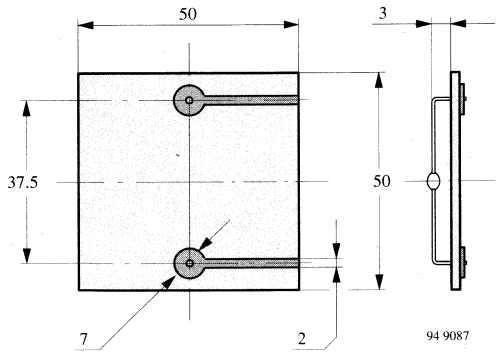

Figure 1. Epoxy glass hard tissue, board thickness 1.5 mm, $R_{thJA} \leqq 70$ K/W

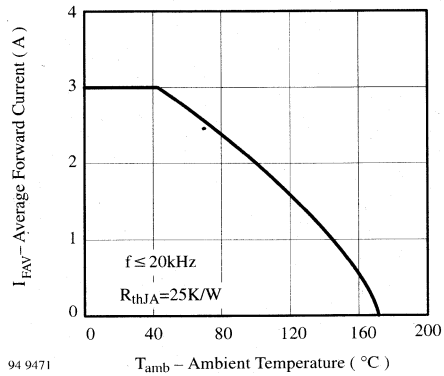

Figure 4. Average Forward Current vs. Ambient Temperature

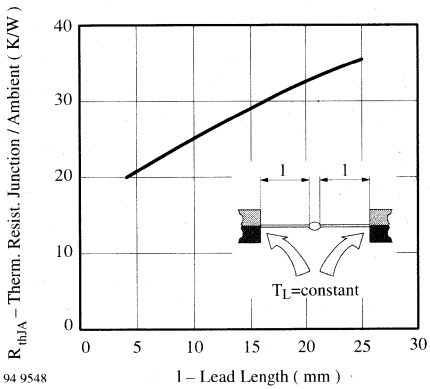

Figure 2. Thermal Resistance vs. Lead Length

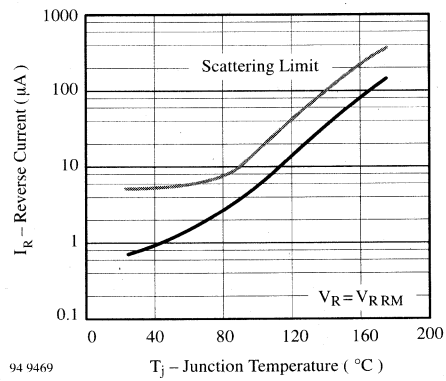

Figure 5. Reverse Current vs. Junction Temperature

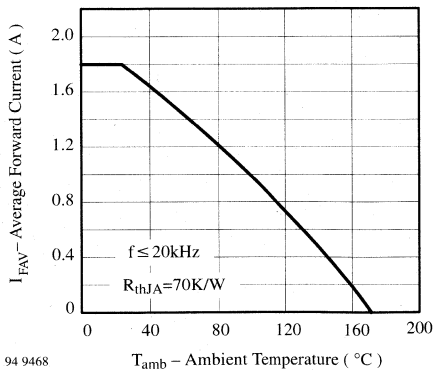

Figure 3. Average Forward Current vs. Ambient Temperature

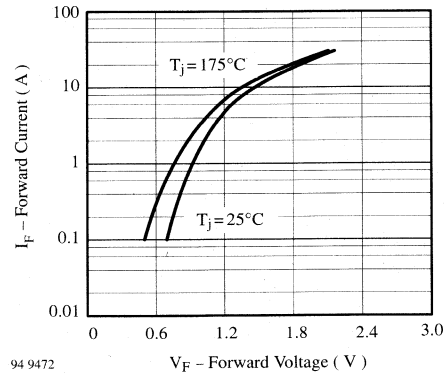

Figure 6. Forward Current vs. Forward Voltage

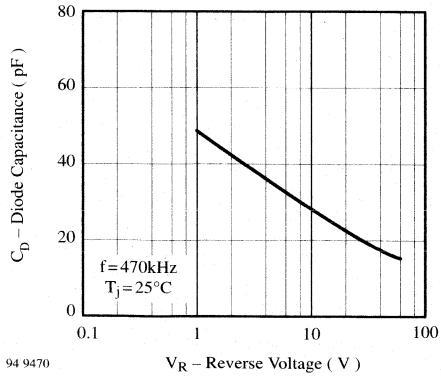

Figure 7. Diode Capacitance vs. Reverse Voltage

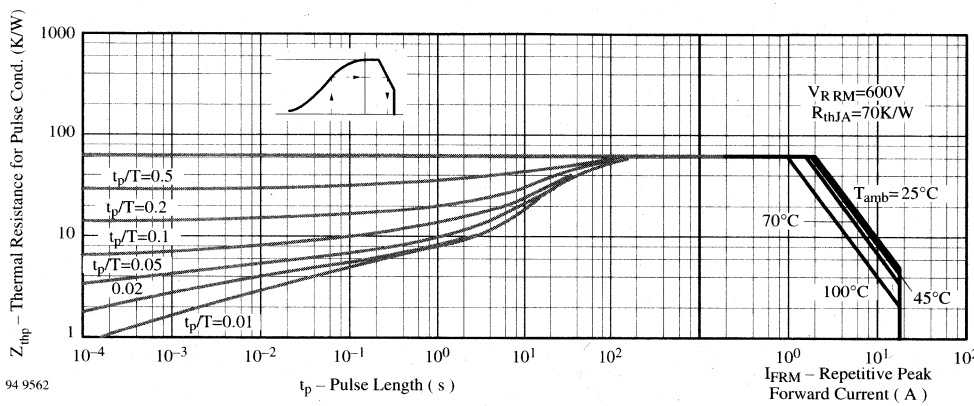

Figure 8. Thermal Response

Dimensions in mm

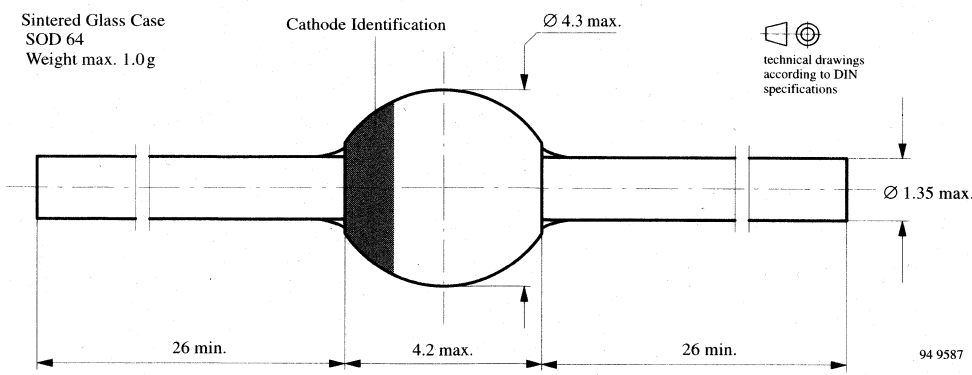

Silicon Mesa Rectifiers

Features

- Glass passivated junction
- Hermetically sealed package
- Controlled avalanche characteristics
- Low reverse current
- High surge current loading
- Electrically equivalent diodes:
  BYW82 – 1N5624 BYW83 – 1N5625
  BYW84 – 1N5626 BYW85 – 1N5627

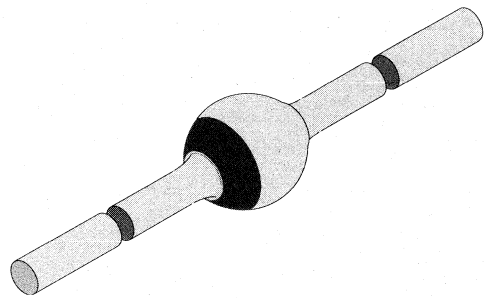

94 9588

Applications

Rectifier, general purpose

Absolute Maximum Ratings

$T_j = 25°C$

Parameter	Test Conditions	Type	Symbol	Value	Unit
Reverse voltage, repetitive peak reverse voltage		BYW82	$V_R=V_{RRM}$	200	V
		BYW83	$V_R=V_{RRM}$	400	V
		BYW84	$V_R=V_{RRM}$	600	V
		BYW85	$V_R=V_{RRM}$	800	V
		BYW86	$V_R=V_{RRM}$	1000	V
Peak forward surge current	t_p=10ms		I_{FSM}	100	A
Repetitive peak forward current			I_{FRM}	18	A
Average forward current	$T_{amb} \leqq 65°C$		I_{FAV}	3	A
Pulse avalanche peak power	t_p=20µs, half sine wave, T_j=175 °C		P_R	1000	W
Max. pulse energy in the avalanche mode, non repetitive (inductive load switch off)	$I_{(BR)R}$=1A, T_j=175°C		E_R	20	mWs
i^2*t–rating			i^2*t	40	A^2*s
Junction temperature			T_j	175	°C
Storage temperature range			T_{stg}	–65...+175	°C

Maximum Thermal Resistance

$T_j = 25°C$

Parameter	Test Conditions	Symbol	Value	Unit
Junction ambient	l=25mm, T_L=constant	R_{thJA}	30	K/W
	on PC board with spacing 37.5mm	R_{thJA}	70	K/W

Characteristics

$T_j = 25°C$

Parameter	Test Conditions	Type	Symbol	Min	Typ	Max	Unit
Forward voltage	I_F=3A		V_F			1.0	V
Reverse current	V_R=V_{RRM}		I_R		0.1	1	µA
	V_R=V_{RRM}, T_j=100°C		I_R		5	10	µA
Breakdown voltage	I_R=100µA, t_p/T=0.01, t_p=0.3ms		$V_{(BR)}$			1600	V
Diode capacitance	V_R=0, f=0.47MHz		C_D		65	100	pF
Reverse recovery time	I_F=0.5A, I_R=1A, i_R=0.25A		t_{rr}		2	4	µs
	I_F=1A, d_i/d_t=5A/µs, V_R=50V		t_{rr}		3	6	µs
Reverse recovery charge	I_F=1A, d_i/d_t=5A/µs		Q_{rr}		6	10	µC

Typical Characteristics ($T_j = 25°C$ unless otherwise specified)

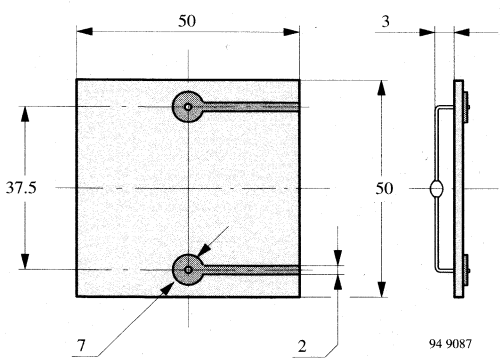

Figure 1. Epoxy glass hard tissue, board thickness 1.5 mm, $R_{thJA} \leqq 70$ K/W

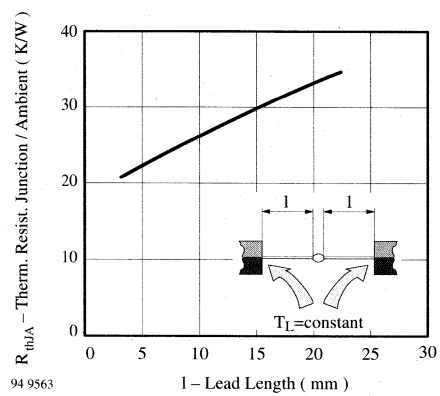

Figure 2. Thermal Resistance vs. Lead Length

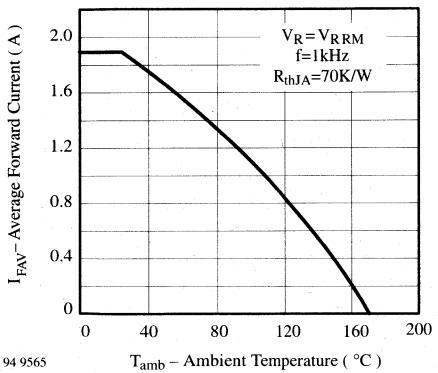

Figure 3. Average Forward Current vs. Ambient Temperature

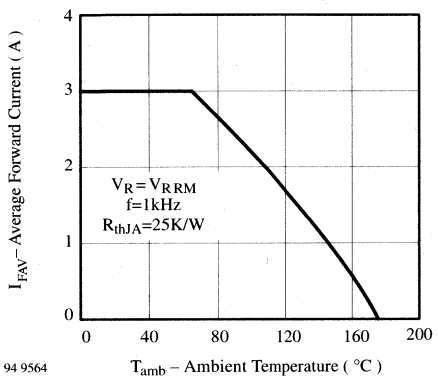

Figure 4. Average Forward Current vs. Ambient Temperature

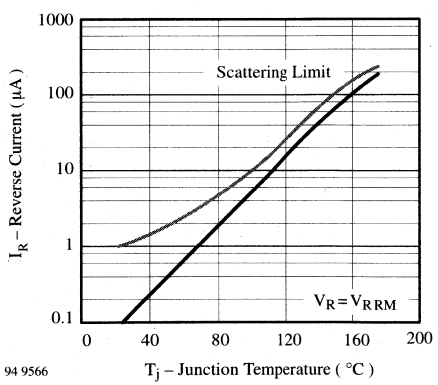

Figure 5. Reverse Current vs. Junction Temperature

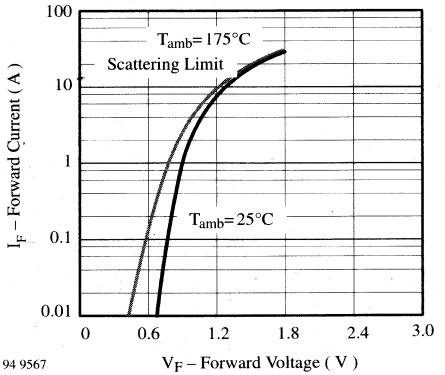

Figure 6. Forward Current vs. Forward Voltage

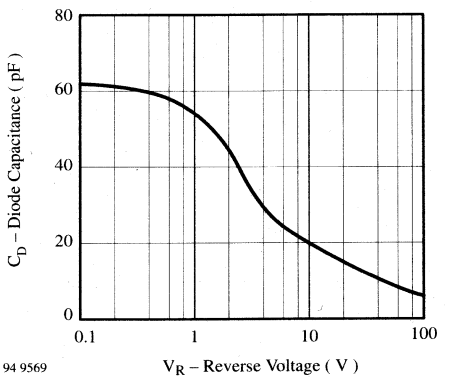

Figure 7. Diode Capacitance vs. Reverse Voltage

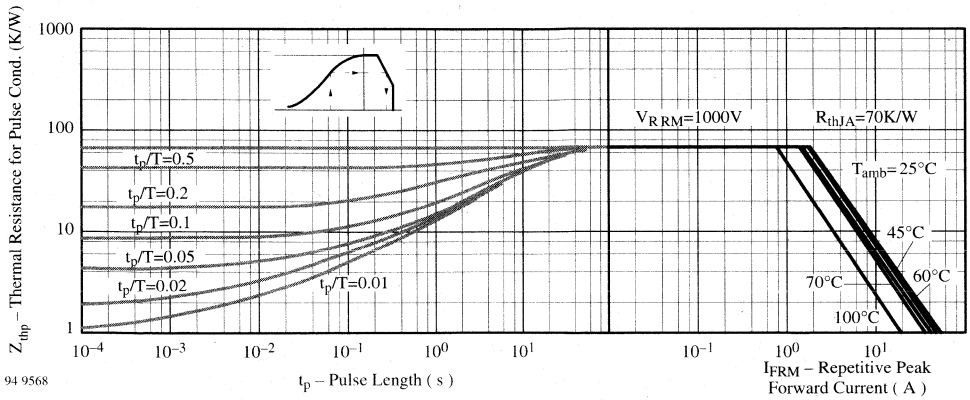

Figure 8. Thermal Response

Dimensions in mm

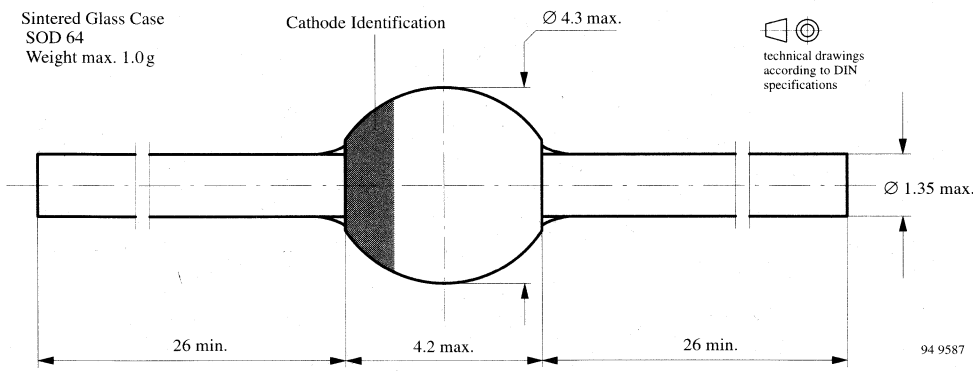

Very Fast Silicon Mesa Rectifier

Features

- Glass passivated junction
- Hermetically sealed package
- Low reverse current
- Soft recovery characteristics
- Very fast reverse recovery time
- Low reverse recovery peak current

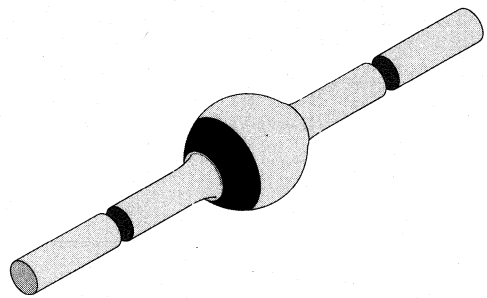

94 9588

Applications

Ultra fast rectifier for switching mode power supplies

Absolute Maximum Ratings

$T_j = 25°C$

Parameter	Test Conditions	Type	Symbol	Value	Unit
Reverse voltage, repetitive peak reverse voltage			$V_R=V_{RRM}$	800	V
Peak forward surge current	t_p=10ms		I_{FSM}	80	A
Repetitive peak forward current			I_{FRM}	15	A
Average forward current			I_{FAV}	3	A
Junction temperature			T_j	175	°C
Storage temperature range			T_{stg}	–65...+175	°C

Maximum Thermal Resistance

$T_j = 25°C$

Parameter	Test Conditions	Symbol	Value	Unit
Junction lead	l=25mm, T_L=constant	R_{thJL}	30	K/W
Junction ambient	on PC board with spacing 37.5mm	R_{thJA}	70	K/W

Characteristics

$T_j = 25°C$

Parameter	Test Conditions	Type	Symbol	Min	Typ	Max	Unit
Forward voltage	I_F=3A		V_F			1.9	V
Reverse current	$V_R=V_{RRM}$		I_R			1	µA
	$V_R=V_{RRM}$, T_j=100°C		I_R			20	µA
Reverse recovery current	I_F=1A, $di_F/dt \leqq -50A/\mu s$, V_{Batt}=200V		I_{RM}		2.2		A
Reverse recovery time	I_F=1A, $di_F/dt \leqq -50A/\mu s$, V_{Batt}=200V, $i_R=0.25xI_{RM}$		t_{rr}		50		ns
Reverse recovery time (JEDEC)	I_F=0.5A, I_R=1A, i_R=0.25A		t_{rr}			60	ns

Typical Characteristics ($T_j = 25°C$ unless otherwise specified)

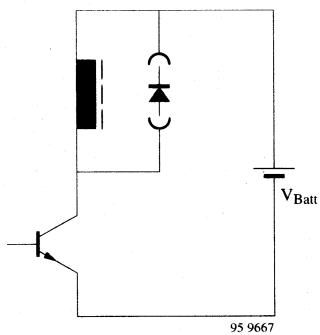

Figure 1. Test circuit

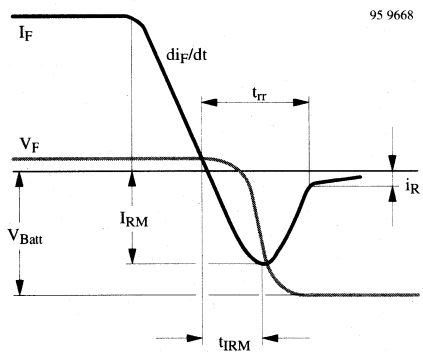

Figure 2. Turn off switching characteristic

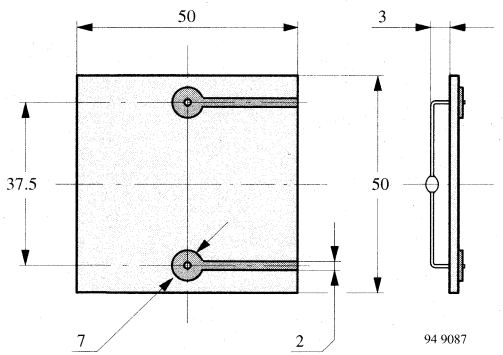

Figure 3. Epoxy glass hard tissue, board thickness 1.5 mm, $R_{thJA} \leqq 70$ K/W

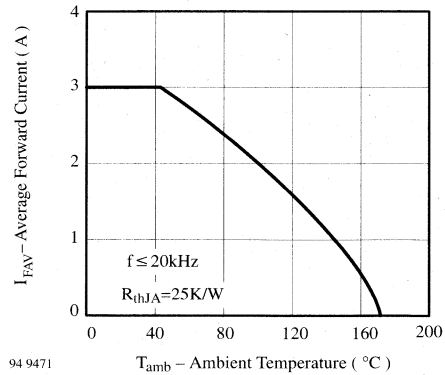

Figure 6. Average Forward Current vs. Ambient Temperature

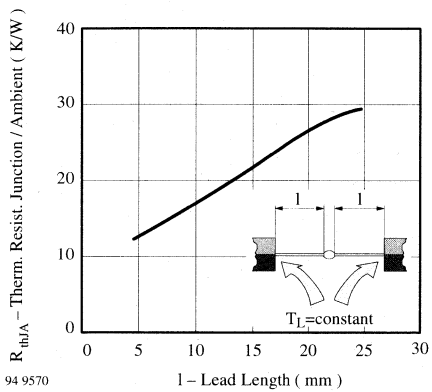

Figure 4. Thermal Resistance vs. Lead Length

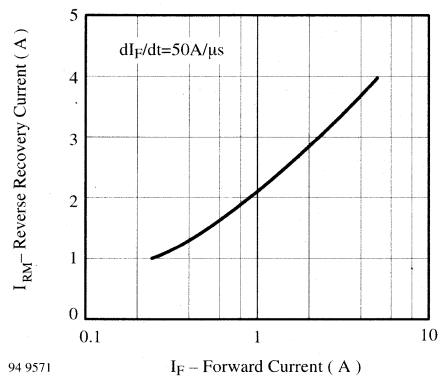

Figure 7. Reverse Recovery Current vs. Forward Current

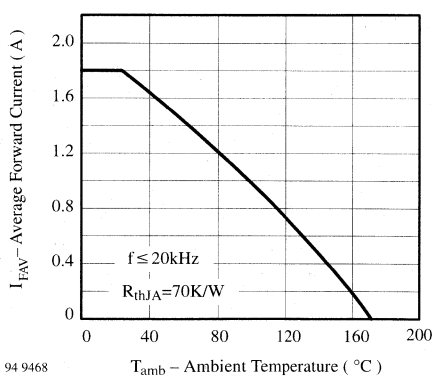

Figure 5. Average Forward Current vs. Ambient Temperature

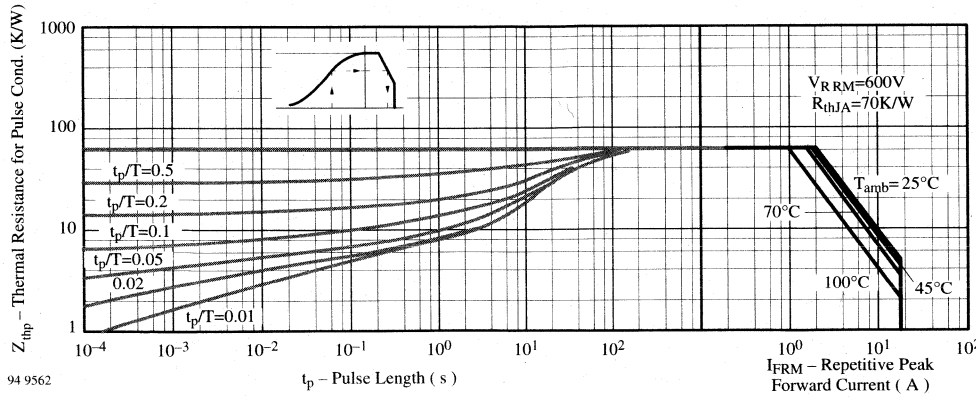

Figure 8. Thermal Response

Dimensions in mm

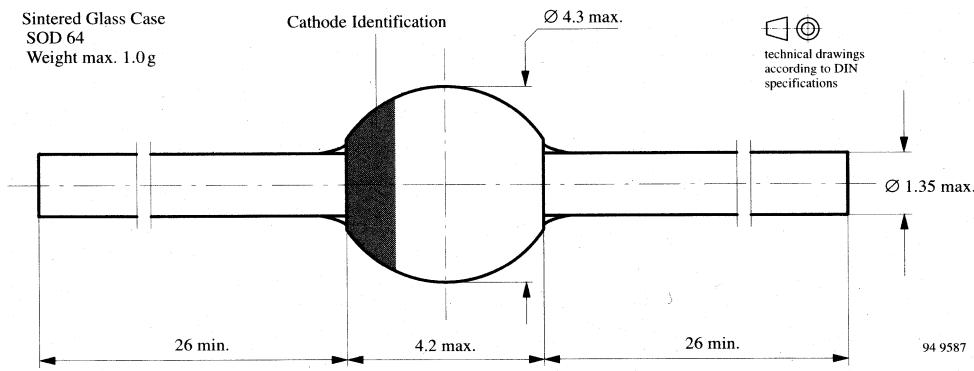

Silicon Mesa Rectifiers

Features

- Glass passivated junction
- Hermetically sealed package
- Low reverse current
- High surge current loading

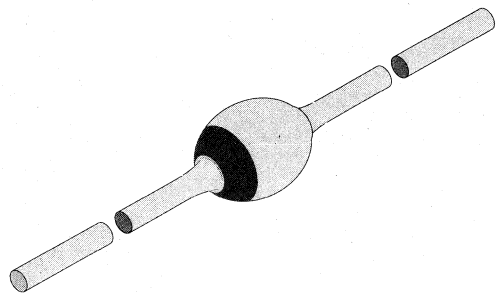

94 9539

Applications

Rectifier, general purpose

Absolute Maximum Ratings

$T_j = 25°C$

Parameter	Test Conditions	Type	Symbol	Value	Unit
Reverse voltage, repetitive peak reverse voltage		BYX82	$V_R=V_{RRM}$	200	V
		BYX83	$V_R=V_{RRM}$	400	V
		BYX84	$V_R=V_{RRM}$	600	V
		BYX85	$V_R=V_{RRM}$	800	V
		BYX86	$V_R=V_{RRM}$	1000	V
Peak forward surge current	t_p=10ms		I_{FSM}	50	A
Repetitive peak forward current			I_{FRM}	10	A
Average forward current	$T_{amb} \leqq 45°C$		I_{FAV}	2	A
i^2*t–rating			i^2*t	8	A^2*s
Junction temperature			T_j	175	°C
Storage temperature range			T_{stg}	–65...+175	°C

Maximum Thermal Resistance

$T_j = 25°C$

Parameter	Test Conditions	Symbol	Value	Unit
Junction ambient	l=10mm, T_L=constant	R_{thJA}	45	K/W
	on PC board with spacing 25mm	R_{thJA}	100	K/W

Characteristics

$T_j = 25°C$

Parameter	Test Conditions	Type	Symbol	Min	Typ	Max	Unit
Forward voltage	I_F=1A		V_F		0.9	1.0	V
Reverse current	V_R=V_{RRM}		I_R		0.1	1	µA
	V_R=V_{RRM}, T_j=100°C		I_R		10	25	µA
Diode capacitance	V_R=4V, f=0.47MHz		C_D		20		pF
Reverse recovery time	I_F=0.5A, I_R=1A, i_R=0.25A		t_{rr}		2	4	µs
Reverse recovery charge	I_F=I_R=1A, di/dt=5A/µs		Q_{rr}		3	6	µC

Typical Characteristics (T_j = 25°C unless otherwise specified)

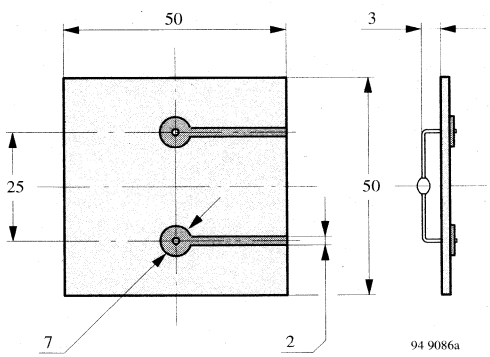

Figure 1. Epoxy glass hard tissue, board thickness 1.5 mm, $R_{thJA} \leqq 100$ K/W

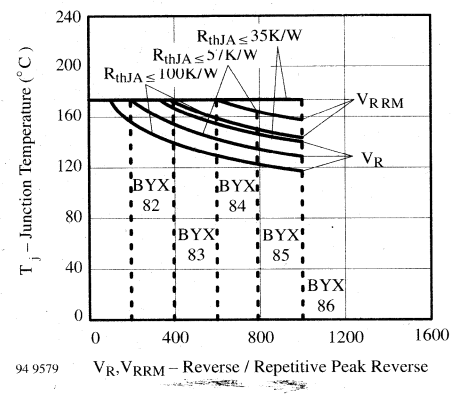

Figure 3. Junction Temperature vs. Reverse/Repetitive Peak Reverse Voltage

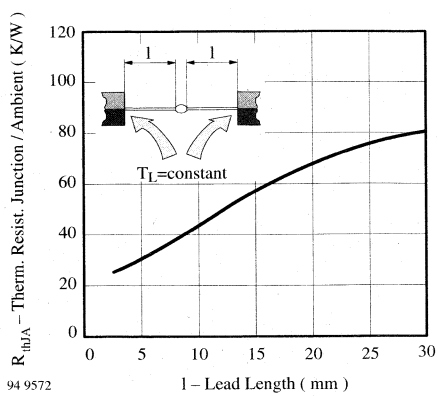

Figure 2. Thermal Resistance vs. Lead Length

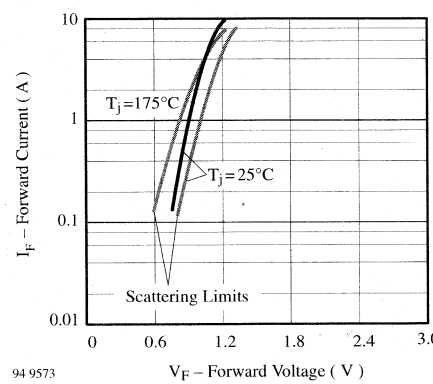

Figure 4. Forward Current vs. Forward Voltage

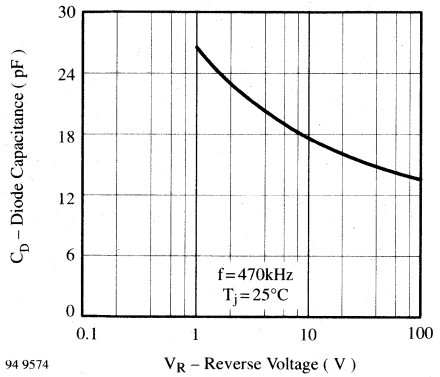

Figure 5. Diode Capacitance vs. Reverse Voltage

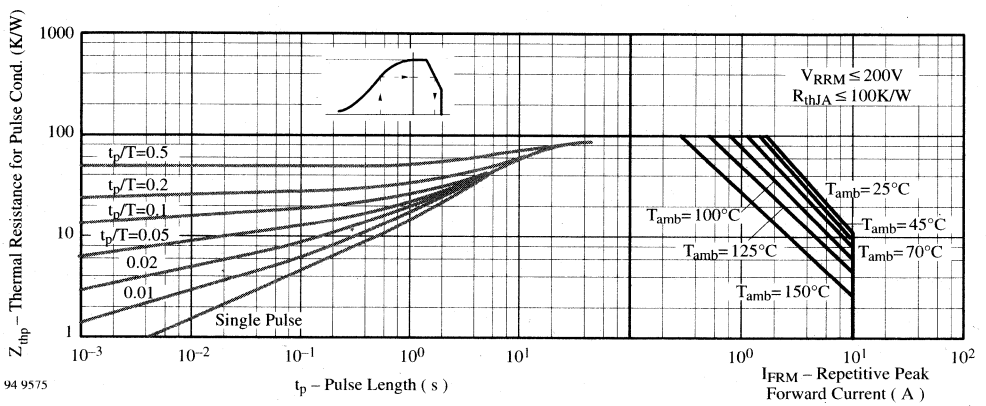

Figure 6. Thermal Response

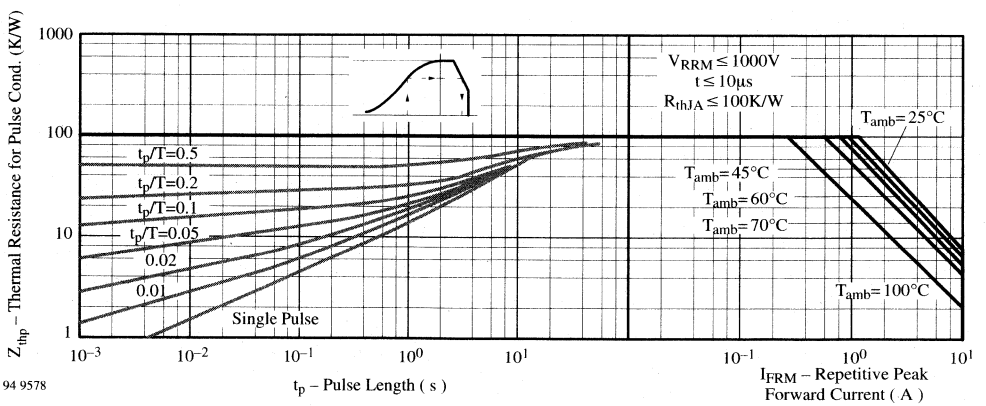

Figure 7. Thermal Response

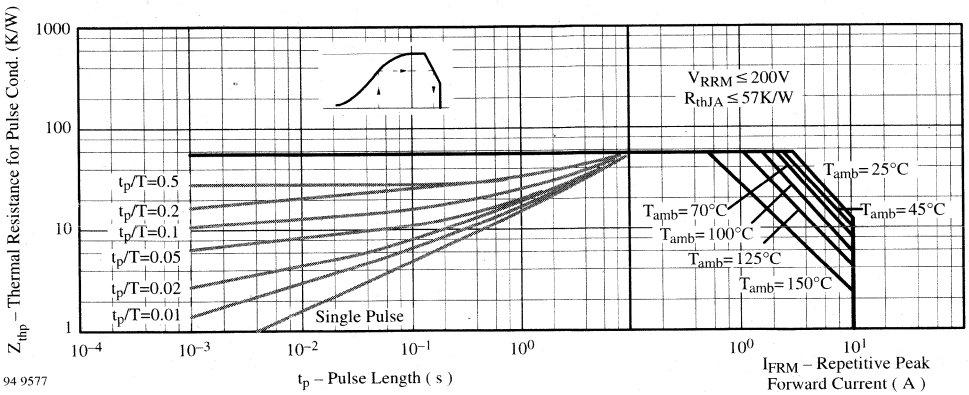

Figure 8. Thermal Response

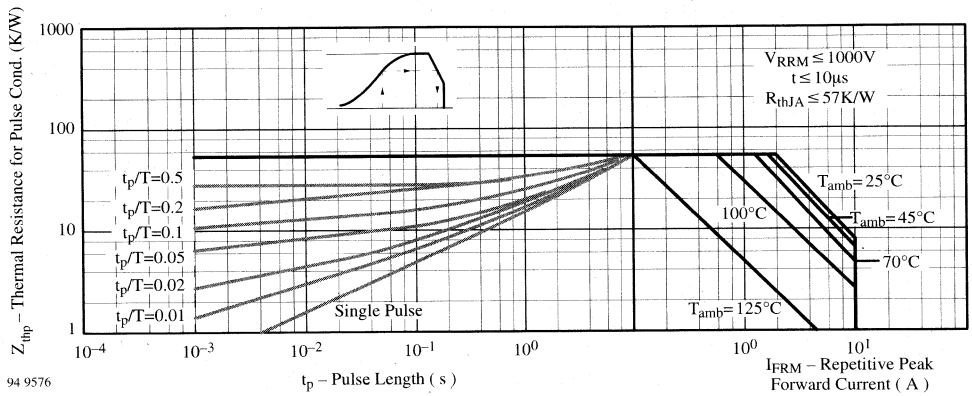

Figure 9. Thermal Response

Dimensions in mm

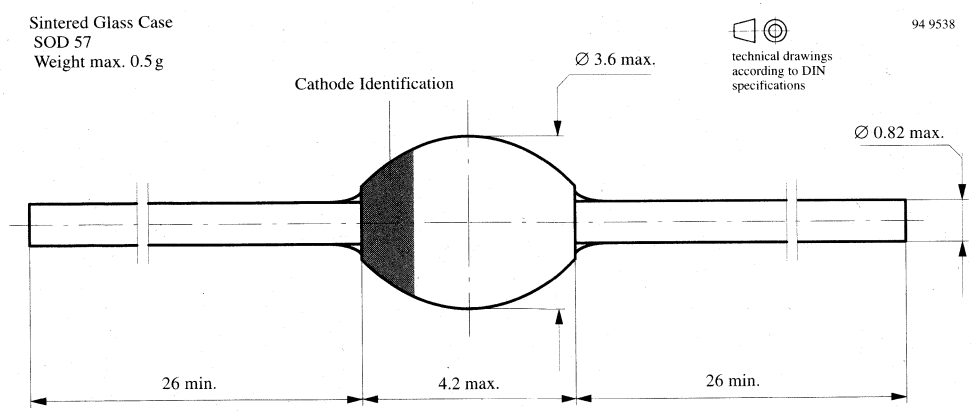

Silicon Epitaxial Planar Diodes

Features

- Electrical data identical with the devices 1N4148 and 1N4448 respectively

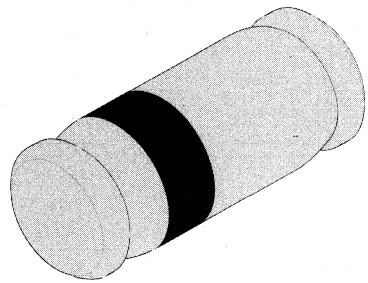

94 9371

Applications

Extreme fast switches

Absolute Maximum Ratings

$T_j = 25°C$

Parameter	Test Conditions	Type	Symbol	Value	Unit
Repetitive peak reverse voltage			V_{RRM}	100	V
Reverse voltage			V_R	75	V
Peak forward surge current	t_p=1µs		I_{FSM}	2	A
Repetitive peak forward current			I_{FRM}	500	mA
Forward current			I_F	300	mA
Average forward current	V_R=0		I_{FAV}	150	mA
Power dissipation			P_V	500	mW
Junction temperature			T_j	175	°C
Storage temperature range			T_{stg}	–65...+175	°C

Maximum Thermal Resistance

$T_j = 25°C$

Parameter	Test Conditions	Symbol	Value	Unit
Junction ambient	on PC board 50mmx50mmx1.6mm	R_{thJA}	500	K/W

Characteristics

T_j = 25°C

Parameter	Test Conditions	Type	Symbol	Min	Typ	Max	Unit
Forward voltage	I_F=5mA	LL4448	V_F	0.62		0.72	V
	I_F=50mA	LL4148	V_F		0.86	1	V
	I_F=100mA	LL4448	V_F		0.93	1	V
Reverse current	V_R=20V		I_R			25	nA
	V_R=20V, T_j=150°C		I_R			50	µA
	V_R=75V		I_R			5	µA
Breakdown voltage	I_R=100µA, t_p/T=0.01, t_p=0.3ms		$V_{(BR)}$	100			V
Diode capacitance	V_R=0, f=1MHz, V_{HF}=50mV		C_D			4	pF
Rectification efficiency	V_{HF}=2V, f=100MHz		η_r	45			%
Reverse recovery time	I_F=I_R=10mA, i_R=1mA		t_{rr}			8	ns
	I_F=10mA, V_R=6V, i_R=0.1xI_R, R_L=100Ω		t_{rr}			4	ns

Typical Characteristics (T_j = 25°C unless otherwise specified)

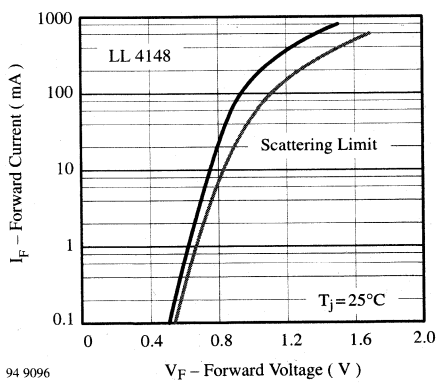

Figure 1. Forward Current vs. Forward Voltage

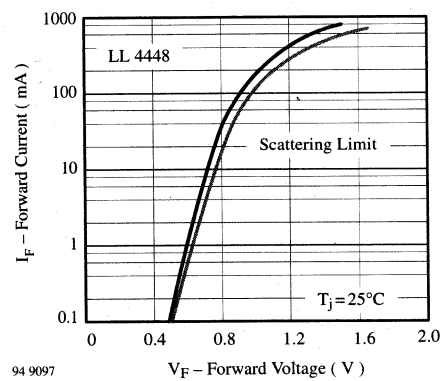

Figure 2. Forward Current vs. Forward Voltage

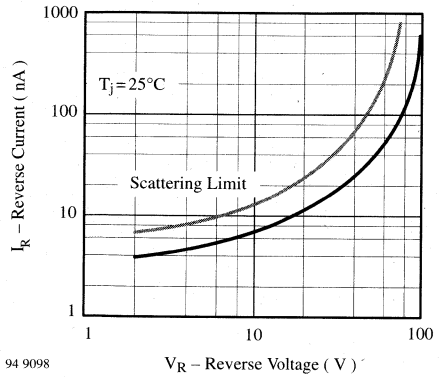

Figure 3. Reverse Current vs. Reverse Voltage

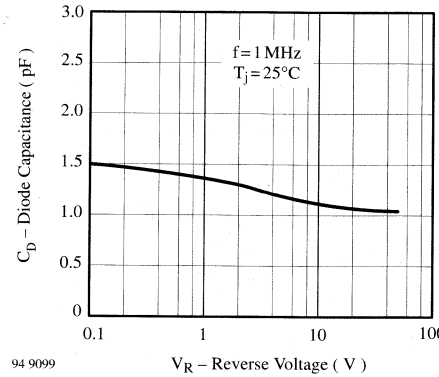

Figure 4. Diode Capacitance vs. Reverse Voltage

Dimensions in mm

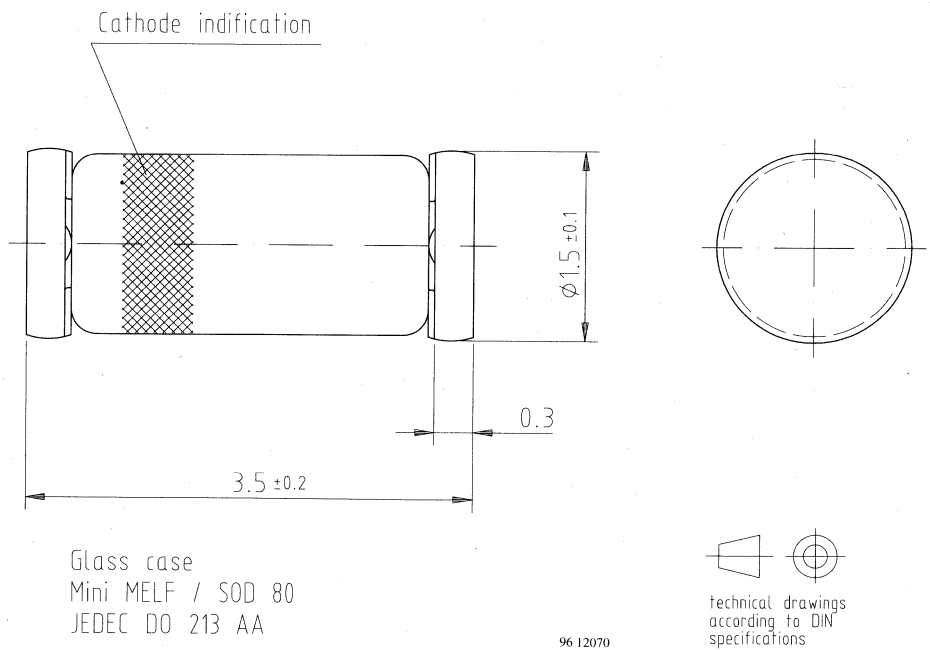

Silicon Epitaxial Planar Diodes

Features

- Low forward voltage drop
- High forward current capability

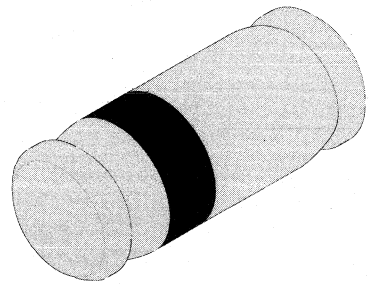

94 9371

Applications

High speed switch and general purpose 0use in computer and industrial applications

Absolute Maximum Ratings

$T_j = 25°C$

Parameter	Test Conditions	Type	Symbol	Value	Unit
Repetitive peak reverse voltage			V_{RRM}	50	V
Reverse voltage			V_R	50	V
Peak forward surge current	t_p=1µs		I_{FSM}	4	A
Forward current			I_F	600	mA
Average forward current	V_R=0		I_{FAV}	300	mA
Power dissipation			P_V	500	mW
Junction temperature			T_j	200	°C
Storage temperature range			T_{stg}	–65...+200	°C

Maximum Thermal Resistance

$T_j = 25°C$

Parameter	Test Conditions	Symbol	Value	Unit
Junction ambient	on PC board 50mmx50mmx1.6mm	R_{thJA}	500	K/W

Characteristics

$T_j = 25°C$

Parameter	Test Conditions	Type	Symbol	Min	Typ	Max	Unit
Forward voltage	I_F=1mA		V_F	0.54		0.62	V
	I_F=10mA		V_F	0.66		0.74	V
	I_F=50mA		V_F	0.76		0.86	V
	I_F=100mA		V_F	0.82		0.92	V
	I_F=200mA		V_F	0.87		1.0	V
Reverse current	V_R=50V		I_R			100	nA
	V_R=50V, T_j=150°C		I_R			100	µA
Diode capacitance	V_R=0, f=1MHz, V_{HF}=50mV		C_D			2.5	pF
Reverse recovery time	I_F=I_R=10...100mA, i_R=0.1xI_R, R_L=100Ω		t_{rr}			4	ns

Typical Characteristics ($T_j = 25°C$ unless otherwise specified)

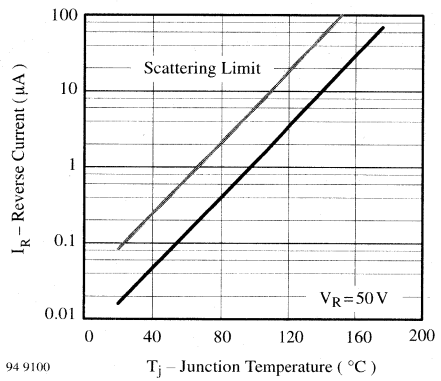

Figure 1. Reverse Current vs. Junction Temperature

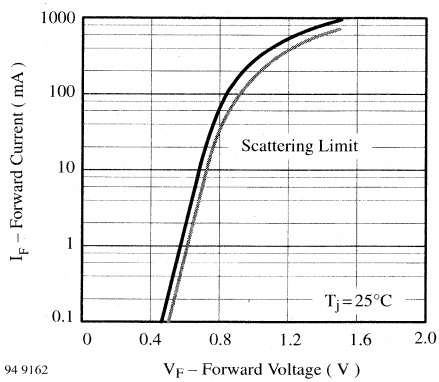

Figure 2. Forward Current vs. Forward Voltage

Dimensions in mm

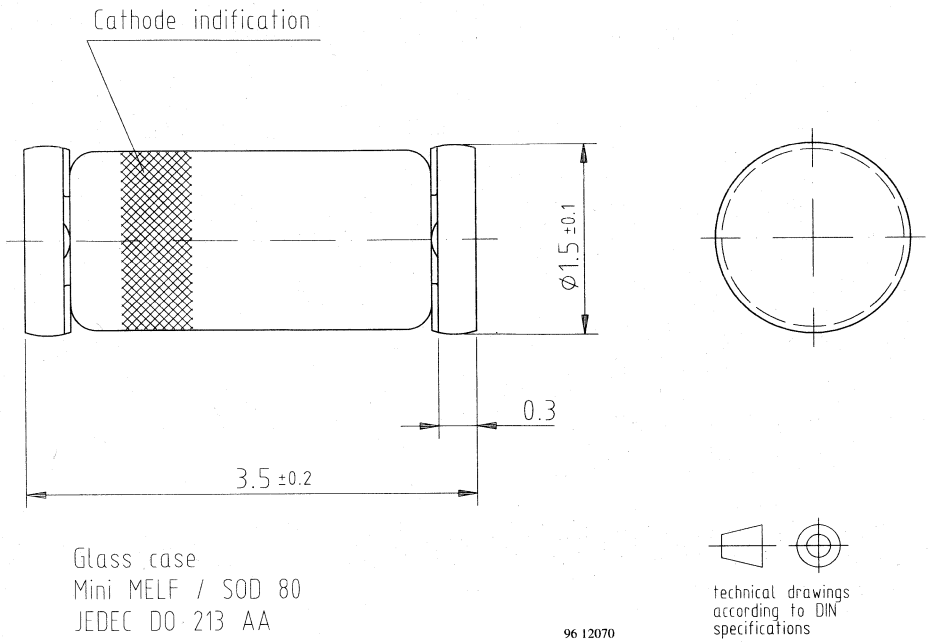

Silicon Epitaxial Planar Diodes

Features

- Electrical data identical with the device 1N4151

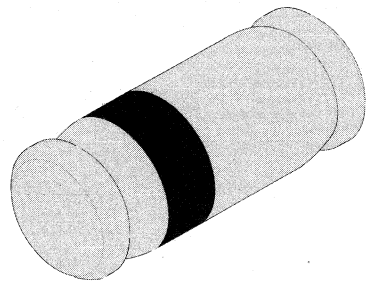

94 9371

Applications

Extreme fast switches

Absolute Maximum Ratings

$T_j = 25°C$

Parameter	Test Conditions	Type	Symbol	Value	Unit
Repetitive peak reverse voltage			V_{RRM}	75	V
Reverse voltage			V_R	50	V
Peak forward surge current	$t_p=1\mu s$		I_{FSM}	2	A
Repetitive peak forward current			I_{FRM}	500	mA
Forward current			I_F	300	mA
Average forward current	$V_R=0$		I_{FAV}	150	mA
Power dissipation			P_V	500	mW
Junction temperature			T_j	175	°C
Storage temperature range			T_{stg}	–65...+175	°C

Maximum Thermal Resistance

$T_j = 25°C$

Parameter	Test Conditions	Symbol	Value	Unit
Junction ambient	on PC board 50mmx50mmx1.6mm	R_{thJA}	500	K/W

Characteristics

$T_j = 25°C$

Parameter	Test Conditions	Type	Symbol	Min	Typ	Max	Unit
Forward voltage	I_F=50mA		V_F		0.88	1	V
Reverse current	V_R=50V		I_R			50	nA
	V_R=50V, T_j=150°C		I_R			50	µA
Breakdown voltage	I_R=5µA, t_p/T=0.01, t_p=0.3ms		$V_{(BR)}$	75			V
Diode capacitance	V_R=0, f=1MHz, V_{HF}=50mV		C_D			2	pF
Reverse recovery time	I_F=I_R=10mA, i_R=1mA		t_{rr}			4	ns
	I_F=10mA, V_R=6V, i_R=0.1xI_R, R_L=100Ω		t_{rr}			2	ns

Typical Characteristics (T_j = 25°C unless otherwise specified)

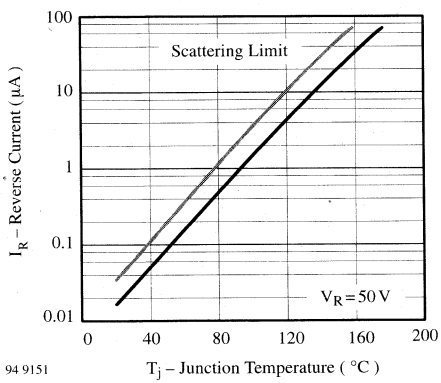

Figure 1. Reverse Current vs. Junction Temperature

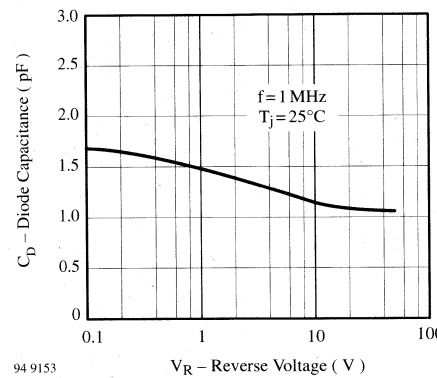

Figure 3. Diode Capacitance vs. Reverse Voltage

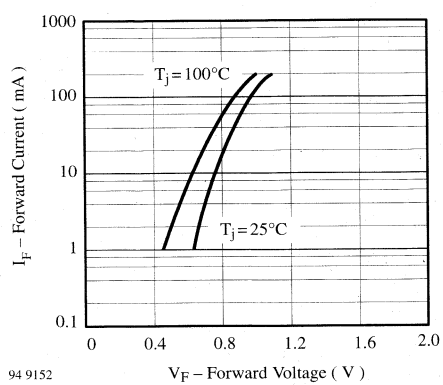

Figure 2. Forward Current vs. Forward Voltage

Dimensions in mm

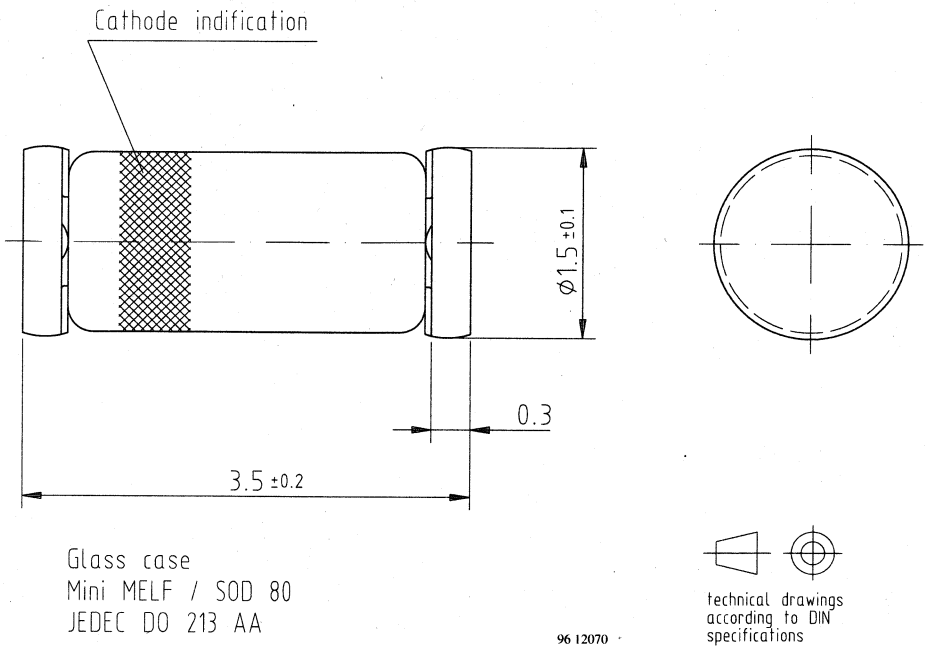

Silicon Epitaxial Planar Diodes

Features

- Electrical data identical with the device 1N4154

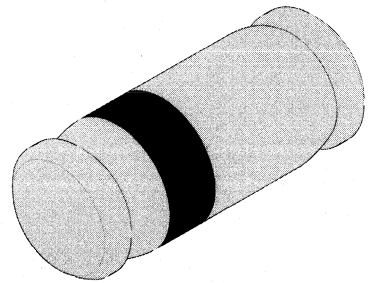

94 9371

Applications

Extreme fast switchess

Absolute Maximum Ratings

$T_j = 25°C$

Parameter	Test Conditions	Type	Symbol	Value	Unit
Repetitive peak reverse voltage			V_{RRM}	35	V
Reverse voltage			V_R	25	V
Peak forward surge current	t_p=1µs		I_{FSM}	2	A
Repetitive peak forward current			I_{FRM}	500	mA
Forward current			I_F	300	mA
Average forward current	V_R=0		I_{FAV}	150	mA
Power dissipation			P_V	500	mW
Junction temperature			T_j	175	°C
Storage temperature range			T_{stg}	–65...+175	°C

Maximum Thermal Resistance

$T_j = 25°C$

Parameter	Test Conditions	Symbol	Value	Unit
Junction ambient	on PC board 50mmx50mmx1.6mm	R_{thJA}	500	K/W

Characteristics

$T_j = 25°C$

Parameter	Test Conditions	Type	Symbol	Min	Typ	Max	Unit
Forward voltage	I_F=30mA		V_F			1	V
Reverse current	V_R=25V		I_R			100	nA
	V_R=25V, T_j=150°C		I_R			100	µA
Breakdown voltage	I_R=5µA, t_p/T=0.01, t_p=0.3ms		$V_{(BR)}$	35			V
Diode capacitance	V_R=0, f=1MHz, V_{HF}=50mV		C_D			4	pF
Reverse recovery time	I_F=I_R=10mA, i_R=1mA		t_{rr}			4	ns
	I_F=10mA, V_R=6V, i_R=0.1xI_R, R_L=100Ω		t_{rr}			2	ns

Typical Characteristics ($T_j = 25°C$ unless otherwise specified)

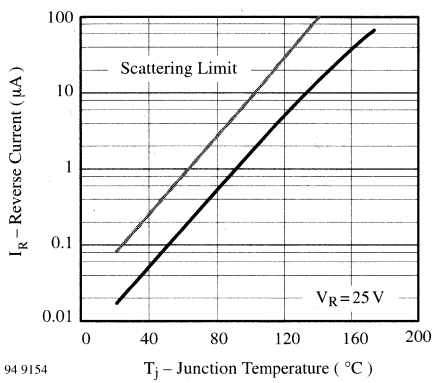

Figure 1. Reverse Current vs. Junction Temperature

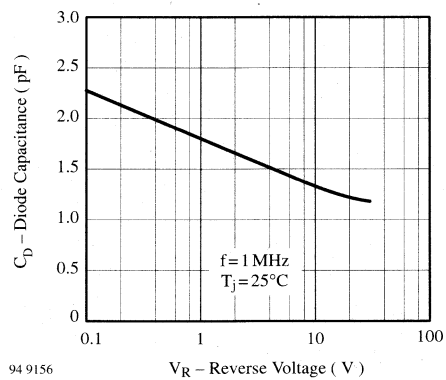

Figure 3. Diode Capacitance vs. Reverse Voltage

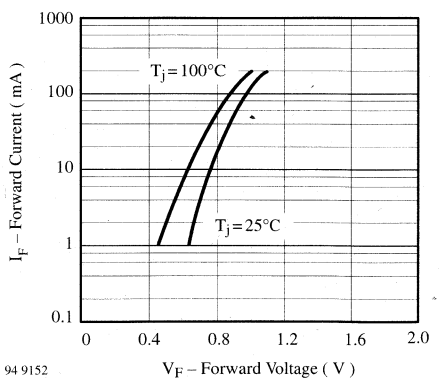

Figure 2. Forward Current vs. Forward Voltage

Dimensions in mm

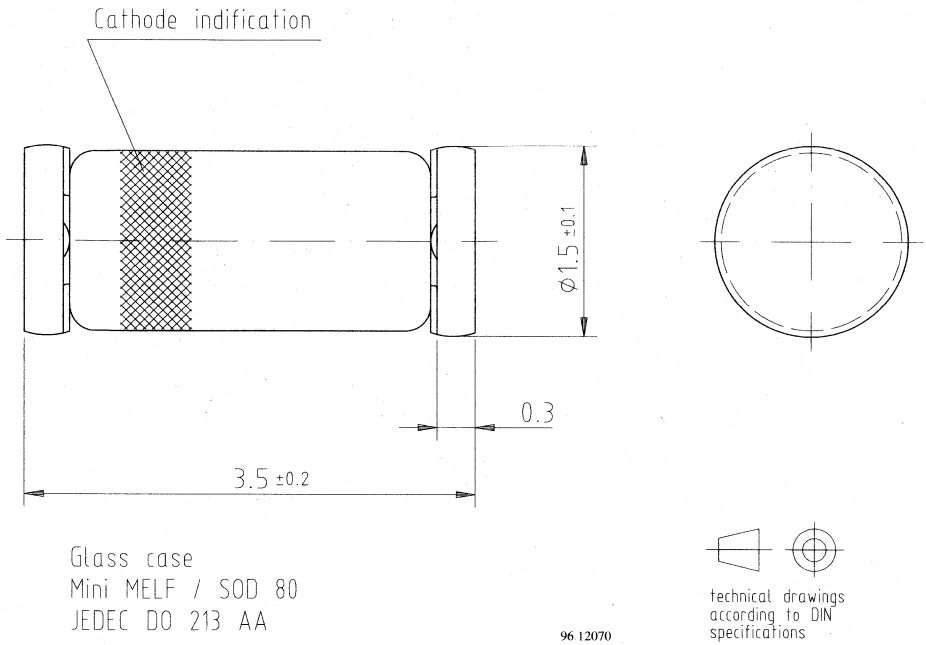

Silicon Epitaxial Planar Diodes

Features

- Electrical data identical with the devices 1N4148 and 1N4448 respectively
- Quadro Melf package

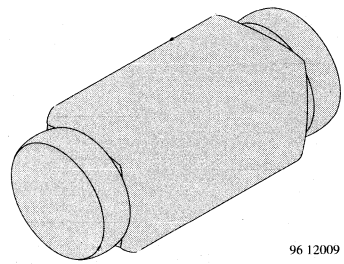

Applications

Extreme fast switches

Absolute Maximum Ratings

$T_j = 25°C$

Parameter	Test Conditions	Type	Symbol	Value	Unit
Repetitive peak reverse voltage			V_{RRM}	100	V
Reverse voltage			V_R	75	V
Peak forward surge current	t_p=1µs		I_{FSM}	2	A
Repetitive peak forward current			I_{FRM}	500	mA
Forward current			I_F	300	mA
Average forward current	V_R=0		I_{FAV}	150	mA
Power dissipation			P_V	500	mW
Junction temperature			T_j	175	°C
Storage temperature range			T_{stg}	–65...+175	°C

Maximum Thermal Resistance

$T_j = 25°C$

Parameter	Test Conditions	Symbol	Value	Unit
Junction ambient	on PC board 50mmx50mmx1.6mm	R_{thJA}	500	K/W

Characteristics

$T_j = 25°C$

Parameter	Test Conditions	Type	Symbol	Min	Typ	Max	Unit
Forward voltage	I_F=5mA	LS4448	V_F	0.62		0.72	V
	I_F=50mA	LS4148	V_F		0.86	1	V
	I_F=100mA	LS4448	V_F		0.93	1	V
Reverse current	V_R=20V		I_R			25	nA
	V_R=20V, T_j=150°C		I_R			50	µA
	V_R=75V		I_R			5	µA
Breakdown voltage	I_R=100µA, t_p/T=0.01, t_p=0.3ms		$V_{(BR)}$	100			V
Diode capacitance	V_R=0, f=1MHz, V_{HF}=50mV		C_D			4	pF
Rectification efficiency	V_{HF}=2V, f=100MHz		η_r	45			%
Reverse recovery time	I_F=I_R=10mA, i_R=1mA		t_{rr}			8	ns
	I_F=10mA, V_R=6V, i_R=0.1xI_R, R_L=100Ω		t_{rr}			4	ns

Typical Characteristics ($T_j = 25°C$ unless otherwise specified)

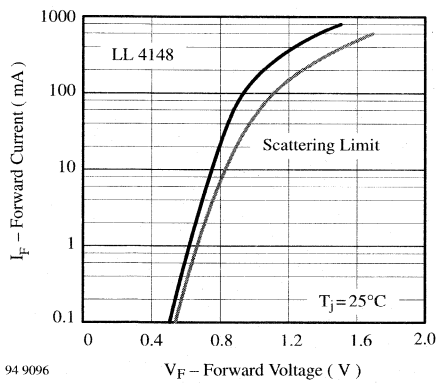

Figure 1. Forward Current vs. Forward Voltage

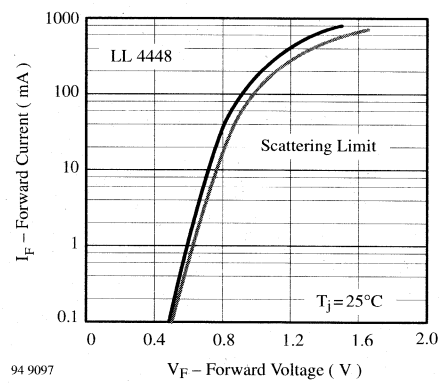

Figure 2. Forward Current vs. Forward Voltage

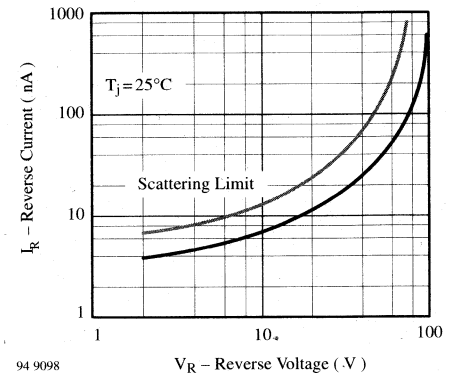

Figure 3. Reverse Current vs. Reverse Voltage

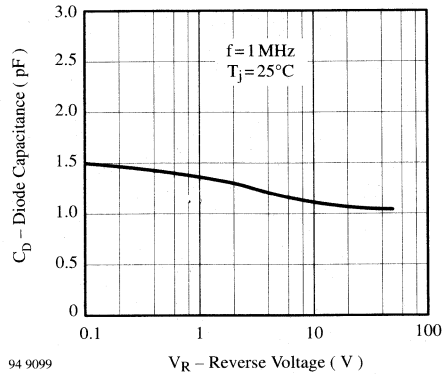

Figure 4. Diode Capacitance vs. Reverse Voltage

Dimensions in mm

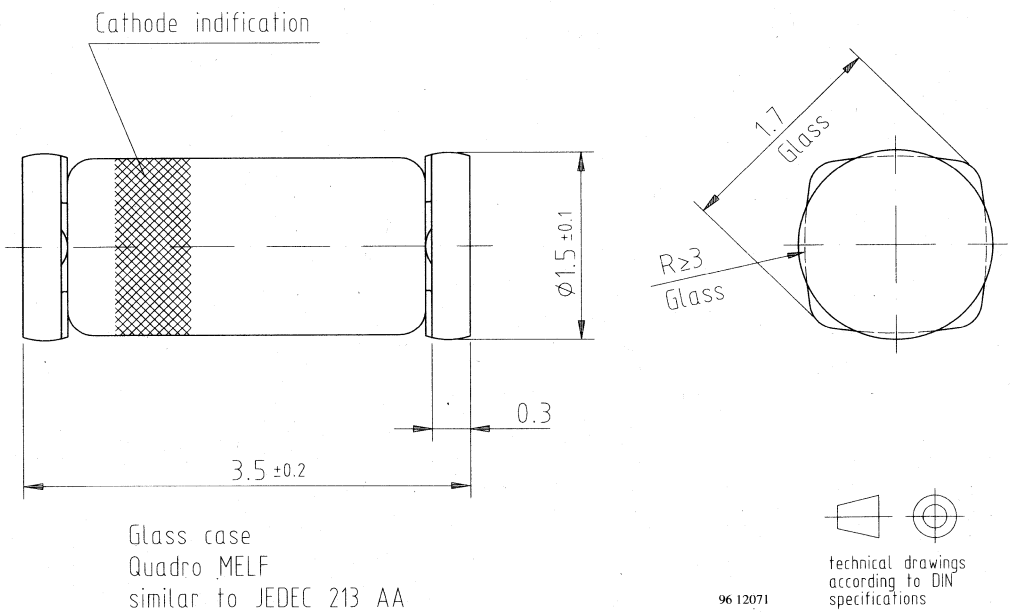

Silicon Epitaxial Planar Diode

Features

- Electrical data identical with the device 1N4150
- Quadro Melf package

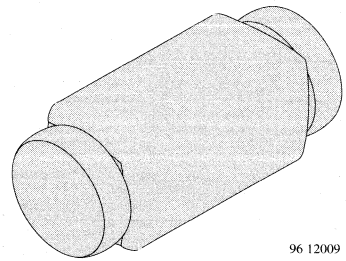

Applications

High speed switch and general purpose use in computer and industrial applications

Absolute Maximum Ratings

$T_j = 25°C$

Parameter	Test Conditions	Type	Symbol	Value	Unit
Repetitive peak reverse voltage			V_{RRM}	50	V
Reverse voltage			V_R	50	V
Peak forward surge current	t_p=1µs		I_{FSM}	4	A
Forward current			I_F	600	mA
Average forward current	V_R=0		I_{FAV}	300	mA
Power dissipation			P_V	500	mW
Junction temperature			T_j	175	°C
Storage temperature range			T_{stg}	–65...+175	°C

Maximum Thermal Resistance

$T_j = 25°C$

Parameter	Test Conditions	Symbol	Value	Unit
Junction ambient	on PC board 50mmx50mmx1.6mm	R_{thJA}	500	K/W

Characteristics

$T_j = 25°C$

Parameter	Test Conditions	Type	Symbol	Min	Typ	Max	Unit
Forward voltage	I_F=1mA		V_F	0.54		0.62	V
	I_F=10mA		V_F	0.66		0.74	V
	I_F=50mA		V_F	0.76		0.86	V
	I_F=100mA		V_F	0.82		0.92	V
	I_F=200mA		V_F	0.87		1.0	V
Reverse current	V_R=50V		I_R			100	nA
	V_R=50V, T_j=150°C		I_R			100	nA
Diode capacitance	V_R=0, f=1MHz, V_{HF}=50mV		C_D			2.5	pF
Reverse recovery time	I_F=I_R=10...100mA, i_R=0.1xI_R, R_L=100Ω		t_{rr}			4	ns

Typical Characteristics (T_j = 25°C unless otherwise specified)

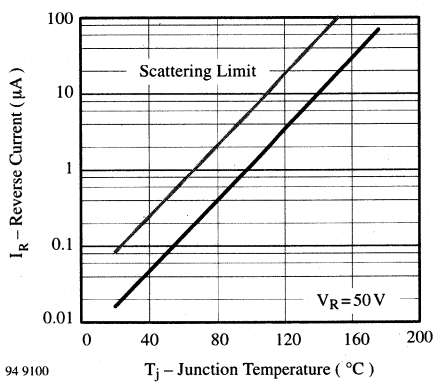

Figure 1. Reverse Current vs. Junction Temperature

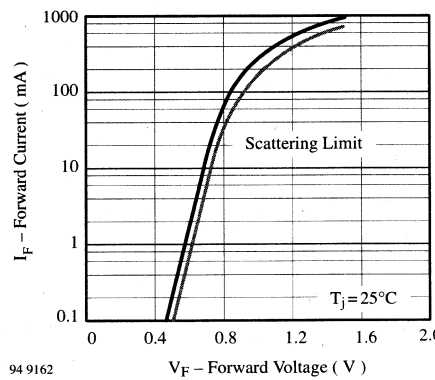

Figure 2. Forward Current vs. Forward Voltage

Dimensions in mm

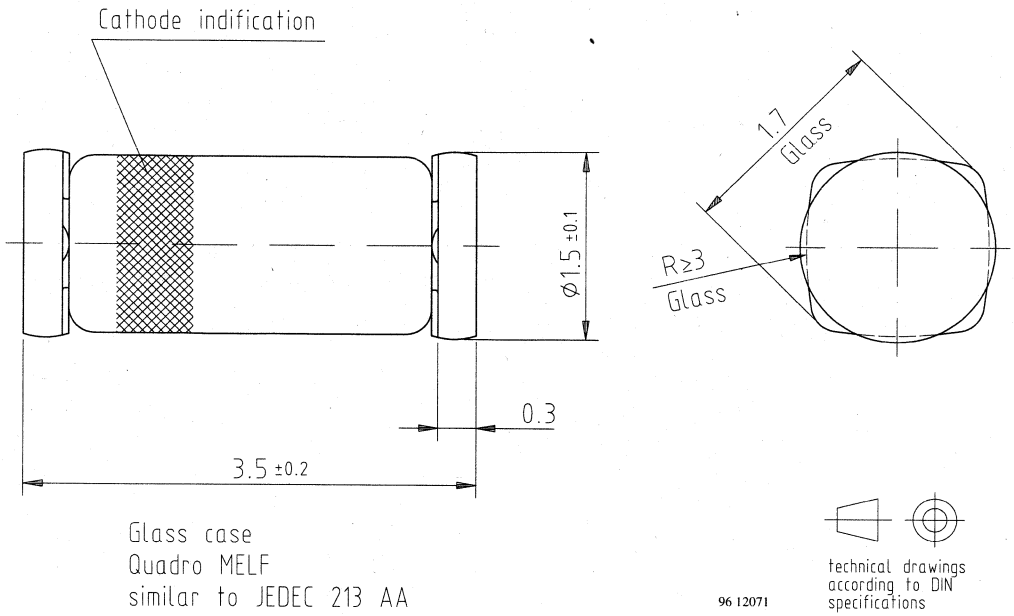

Silicon Epitaxial Planar Diode

Features

- Electrical data identical with the device 1N4151
- Quadro Melf package

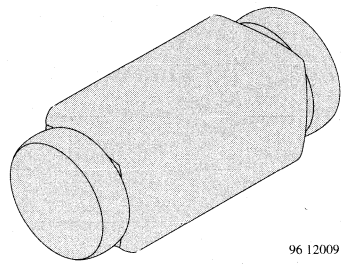

Applications

Extreme fast switches

Absolute Maximum Ratings

$T_j = 25°C$

Parameter	Test Conditions	Type	Symbol	Value	Unit
Repetitive peak reverse voltage			V_{RRM}	75	V
Reverse voltage			V_R	50	V
Peak forward surge current	t_p=1µs		I_{FSM}	2	A
Repetitive peak forward current			I_{FRM}	500	mA
Forward current			I_F	300	mA
Average forward current	V_R=0		I_{FAV}	150	mA
Power dissipation			P_V	500	mW
Junction temperature			T_j	175	°C
Storage temperature range			T_{stg}	–65...+175	°C

Maximum Thermal Resistance

$T_j = 25°C$

Parameter	Test Conditions	Symbol	Value	Unit
Junction ambient	on PC board 50mmx50mmx1.6mm	R_{thJA}	500	K/W

Characteristics

$T_j = 25°C$

Parameter	Test Conditions	Type	Symbol	Min	Typ	Max	Unit
Forward voltage	I_F=50mA		V_F		0.88	1	V
Reverse voltage	V_R=50V		I_R			50	nA
	V_R=50V, T_j=150°C		I_R			50	µA
Breakdown voltage	I_R=5µA, t_p/T=0.01, t_p=0.3ms		$V_{(BR)}$	75			V
Diode capacitance	V_R=0, f=1MHz, V_{HF}=50mV		C_D			2	pF
Reverse recovery time	I_F=I_R=10mA, i_R=1mA		t_{rr}			4	ns
	I_F=10mA, V_R=6V, i_R=0.1xI_R, R_L=100Ω		t_{rr}			2	ns

Typical Characteristics ($T_j = 25°C$ unless otherwise specified)

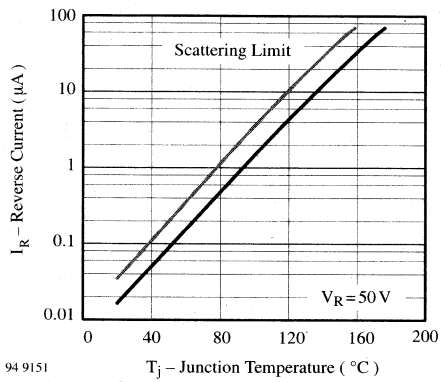

Figure 1. Reverse Current vs. Junction Temperature

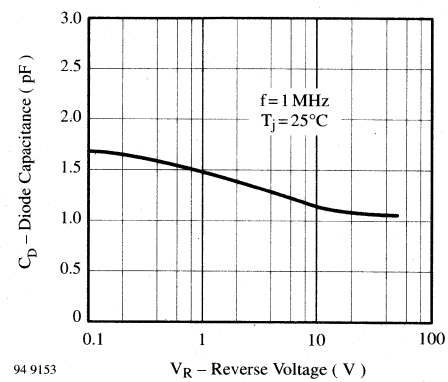

Figure 3. Diode Capacitance vs. Reverse Voltage

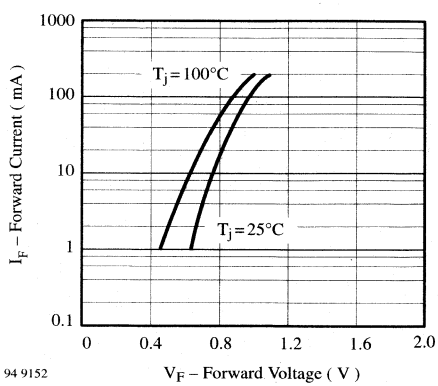

Figure 2. Forward Current vs. Forward Voltage

Dimensions in mm

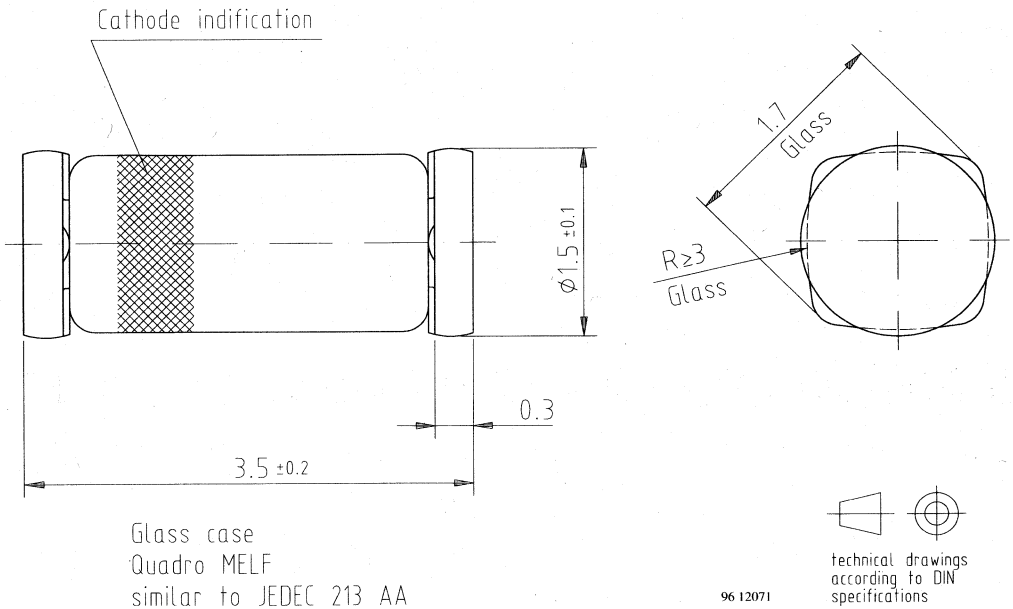

Glass case
Quadro MELF
similar to JEDEC 213 AA

LS4154

Silicon Epitaxial Planar Diode

Features

- Electrical data identical with the device 1N4154
- Quadro Melf package

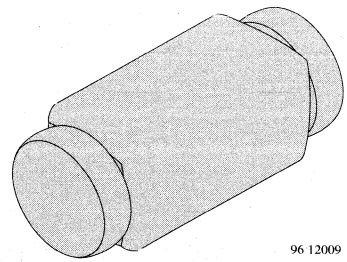

Applications

Extreme fast switches

Absolute Maximum Ratings

$T_j = 25°C$

Parameter	Test Conditions	Type	Symbol	Value	Unit
Repetitive peak reverse voltage			V_{RRM}	35	V
Reverse voltage			V_R	25	V
Peak forward surge current	t_p=1µs		I_{FSM}	2	A
Repetitive peak forward current			I_{FRM}	500	mA
Forward current			I_F	300	mA
Average forward current	V_R=0		I_{FAV}	150	mA
Power dissipation			P_V	500	mW
Junction temperature			T_j	175	°C
Storage temperature range			T_{stg}	–65...+175	°C

Maximum Thermal Resistance

$T_j = 25°C$

Parameter	Test Conditions	Symbol	Value	Unit
Junction ambient	on PC board 50mmx50mmx1.6mm	R_{thJA}	500	K/W

Characteristics

$T_j = 25°C$

Parameter	Test Conditions	Type	Symbol	Min	Typ	Max	Unit
Forward voltage	I_F=30mA		V_F			1	V
Reverse current	V_R=25V		I_R			100	nA
	V_R=25V, T_j=150°C		I_R			100	µA
Breakdown voltage	I_R=5µA, t_p/T=0.01, t_p=0.3ms		$V_{(BR)}$	35			V
Diode capacitance	V_R=0, f=1MHz, V_{HF}=50mV		C_D			4	pF
Reverse recovery time	I_F=I_R=10mA, i_R=1mA		t_{rr}			4	ns
	I_F=10mA, V_R=6V, i_R=0.1xI_R, R_L=100Ω		t_{rr}			2	ns

Typical Characteristics (T_j = 25°C unless otherwise specified)

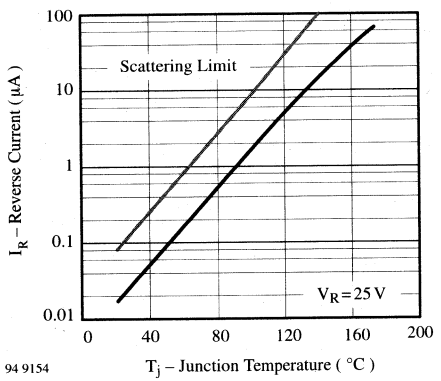

Figure 1. Reverse Current vs. Junction Temperature

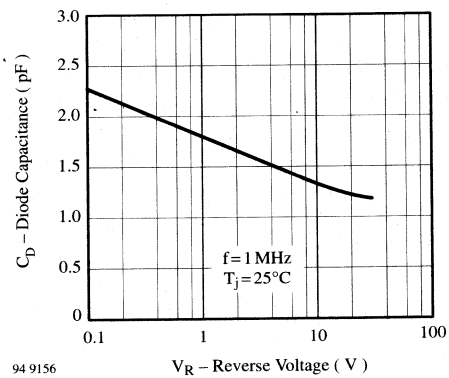

Figure 3. Diode Capacitance vs. Reverse Voltage

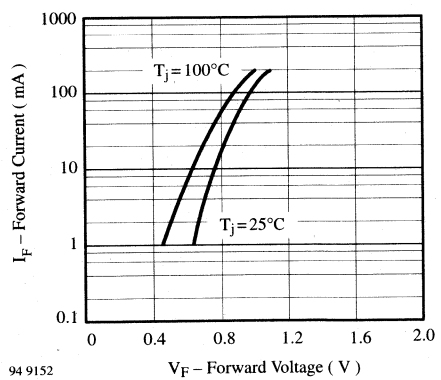

Figure 2. Forward Current vs. Forward Voltage

Dimensions in mm

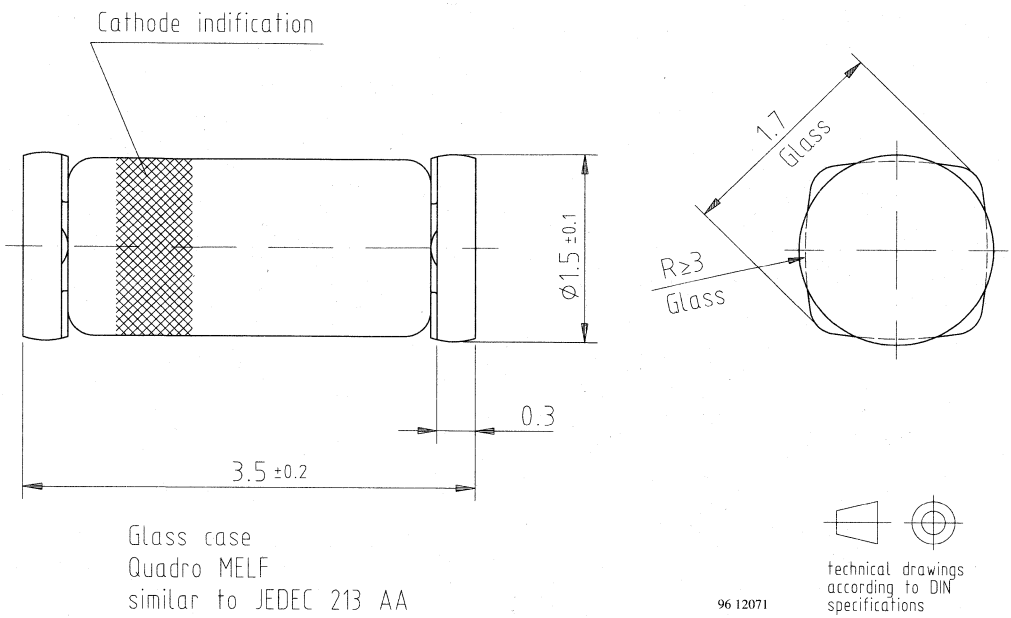

Silicon Epitaxial Planar Diodes

Features

- Saving space
- Hermetic sealed parts
- Fits onto SOD 323 / SOT 23 footprints
- Electrical data identical with the devices 1N4148 and 1N4448 respectively
- Micro Melf package

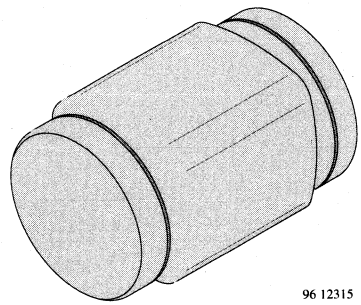

Applications

Extreme fast switches

Absolute Maximum Ratings

$T_j = 25°C$

Parameter	Test Conditions	Type	Symbol	Value	Unit
Repetitive peak reverse voltage			V_{RRM}	100	V
Reverse voltage			V_R	75	V
Peak forward surge current	t_p=1µs		I_{FSM}	2	A
Repetitive peak forward current			I_{FRM}	450	mA
Forward current			I_F	200	mA
Average forward current	V_R=0		I_{FAV}	150	mA
Power dissipation			P_V	500	mW
Junction temperature			T_j	175	°C
Storage temperature range			T_{stg}	–65...+175	°C

Maximum Thermal Resistance

$T_j = 25°C$

Parameter	Test Conditions	Symbol	Value	Unit
Junction ambient	mounted on epoxy–glass hard issue, Fig. 1, 35µm copper clad, 0.9 mm^2 copper area per electrode	R_{thJA}	500	K/W

Characteristics

$T_j = 25°C$

Parameter	Test Conditions	Type	Symbol	Min	Typ	Max	Unit
Forward voltage	I_F=5mA	MCL4448	V_F	0.62		0.72	V
	I_F=50mA	MCL4148	V_F		0.86	1	V
	I_F=100mA	MCL4448	V_F		0.93	1	V
Reverse current	V_R=20V		I_R			25	nA
	V_R=20V, T_j=150°C		I_R			50	µA
	V_R=75V		I_R			5	µA
Breakdown voltage	I_R=100µA, t_p/T=0.01, t_p=0.3ms		$V_{(BR)}$	100			V
Diode capacitance	V_R=0, f=1MHz, V_{HF}=50mV		C_D			4	pF
Rectification efficiency	V_{HF}=2V, f=100MHz		η_r	45			%
Reverse recovery time	I_F=I_R=10mA, i_R=1mA		t_{rr}			8	ns
	I_F=10mA, V_R=6V, i_R=0.1xI_R, R_L=100Ω		t_{rr}			4	ns

Typical Characteristics (T_j = 25°C unless otherwise specified)

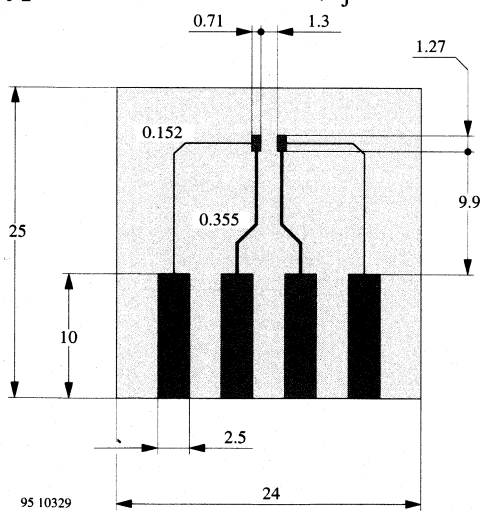

Figure 1. Board for R_{thJA} definition (in mm)

Reflow Soldering

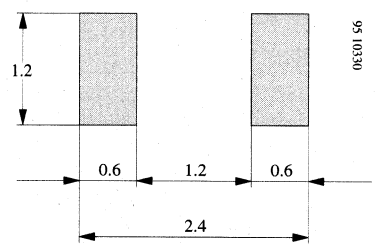

Figure 2. Recommended foot pads (in mm)

Wave Soldering

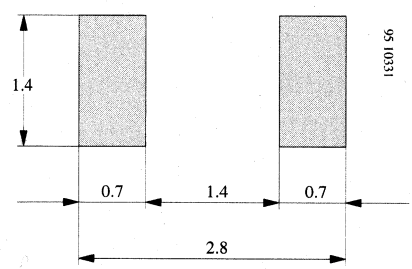

Figure 3. Recommended foot pads (in mm)

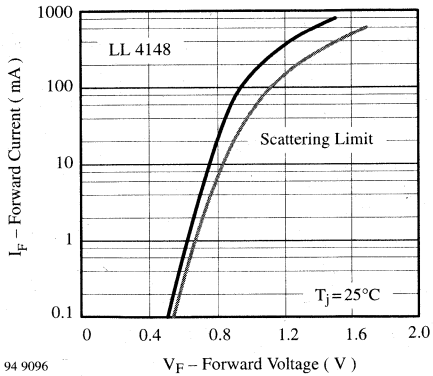

Figure 4. Forward Current vs. Forward Voltage

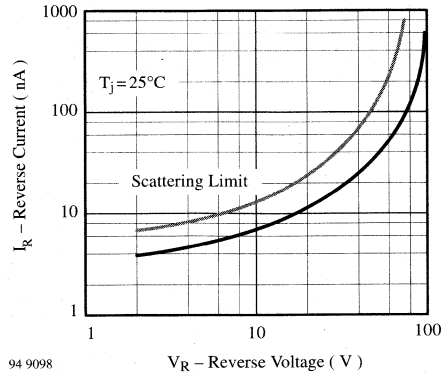

Figure 6. Reverse Current vs. Reverse Voltage

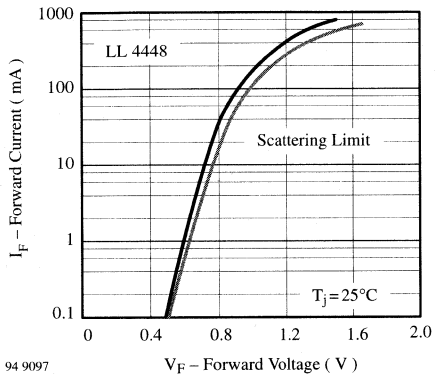

Figure 5. Forward Current vs. Forward Voltage

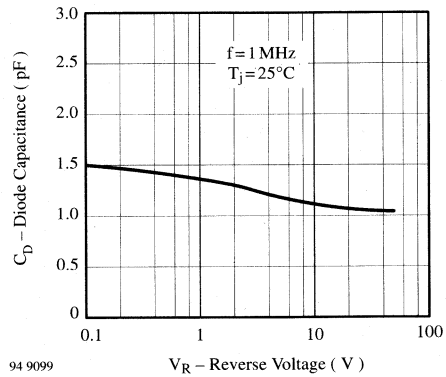

Figure 7. Diode Capacitance vs. Reverse Voltage

Dimensions in mm

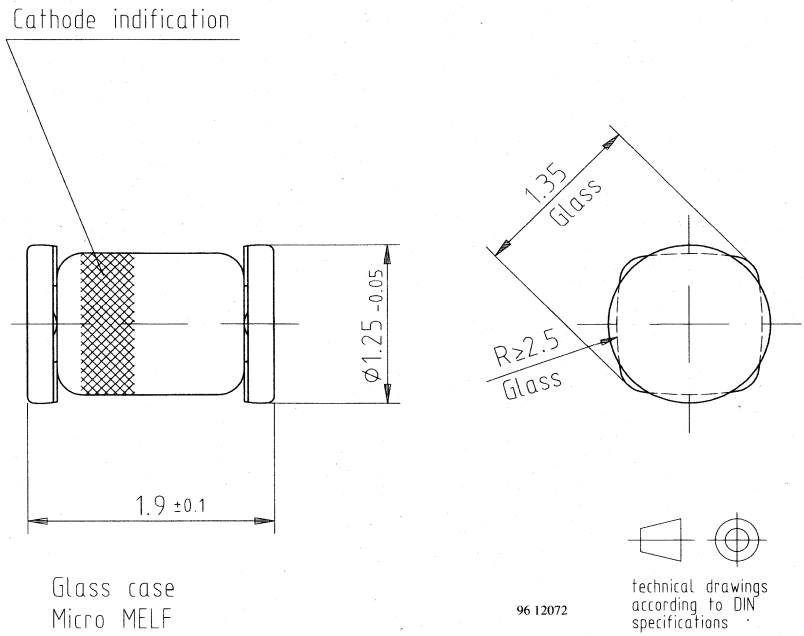

Silicon Epitaxial Planar Diode

Features

- Electrical data identical with the device 1N4151
- Micro Melf package

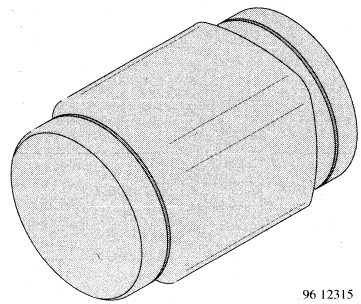

Applications

Extreme fast switches

Absolute Maximum Ratings

$T_j = 25°C$

Parameter	Test Conditions	Type	Symbol	Value	Unit
Repetitive peak reverse voltage			V_{RRM}	75	V
Reverse voltage			V_R	50	V
Peak forward surge current	t_p=1µs		I_{FSM}	2	A
Repetitive peak forward current			I_{FRM}	450	mA
Forward current			I_F	200	mA
Average forward current	V_R=0		I_{FAV}	150	mA
Power dissipation			P_V	500	mW
Junction temperature			T_j	175	°C
Storage temperature range			T_{stg}	–65...+175	°C

Maximum Thermal Resistance

$T_j = 25°C$

Parameter	Test Conditions	Symbol	Value	Unit
Junction ambient	mounted on epoxy–glass hard issue, Fig. 1, 35µm copper clad, 0.9 mm^2 copper area per electrode	R_{thJA}	500	K/W

Characteristics

$T_j = 25°C$

Parameter	Test Conditions	Type	Symbol	Min	Typ	Max	Unit
Forward voltage	I_F=50mA		V_F		0.88	1	V
Reverse voltage	V_R=50V		I_R			50	nA
	V_R=50V, T_j=150°C		I_R			50	µA
Breakdown voltage	I_R=5µA, t_p/T=0.01, t_p=0.3ms		$V_{(BR)}$	75			V
Diode capacitance	V_R=0, f=1MHz, V_{HF}=50mV		C_D			2	pF
Reverse recovery time	I_F=I_R=10mA, i_R=1mA		t_{rr}			4	ns
	I_F=10mA, V_R=6V, i_R=0.1xI_R, R_L=100Ω		t_{rr}			2	ns

Typical Characteristics ($T_j = 25°C$ unless otherwise specified)

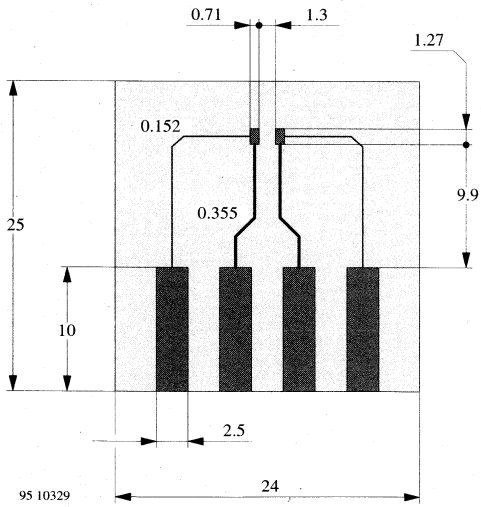

Figure 1. Board for R_{thJA} definition (in mm)

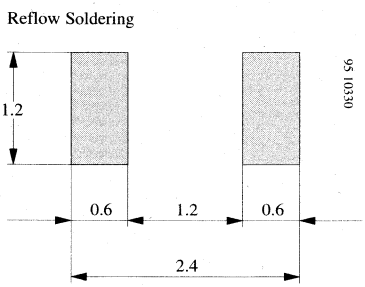

Figure 2. Recommended foot pads (in mm)

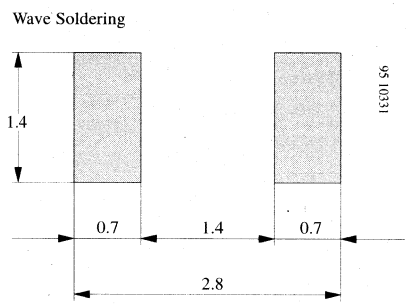

Figure 3. Recommended foot pads (in mm)

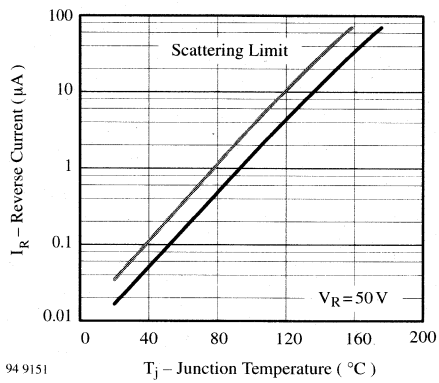

Figure 4. Reverse Current vs. Junction Temperature

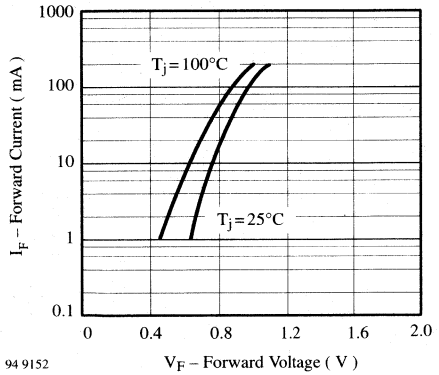

Figure 5. Forward Current vs. Forward Voltage

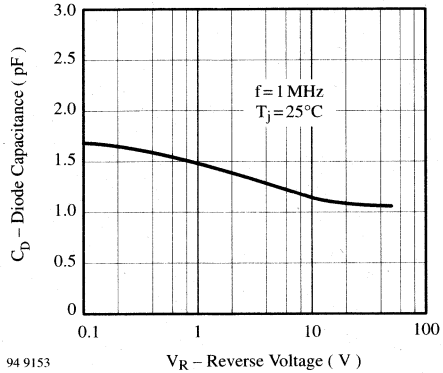

Figure 6. Diode Capacitance vs. Reverse Voltage

Dimensions in mm

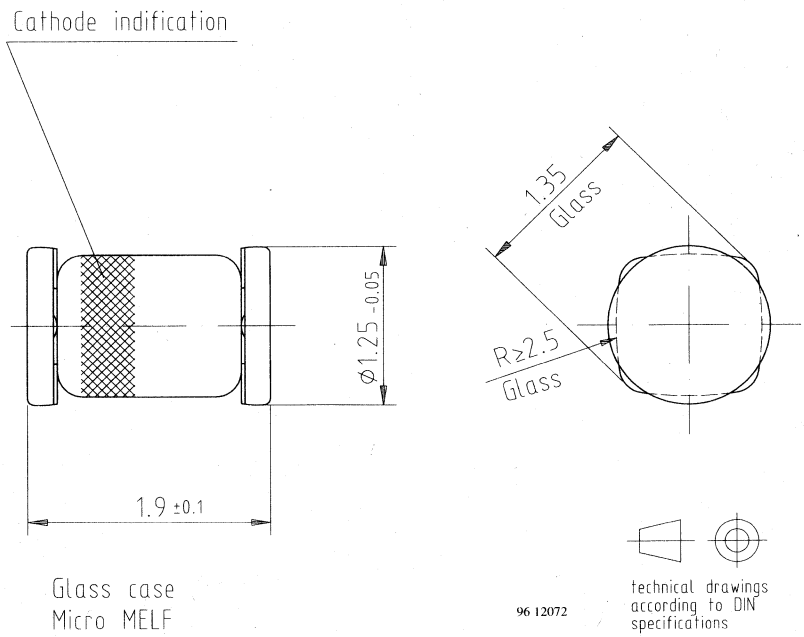

MCL4154

Silicon Epitaxial Planar Diode

Features

- Electrical data identical with the device 1N4154
- Micro Melf package

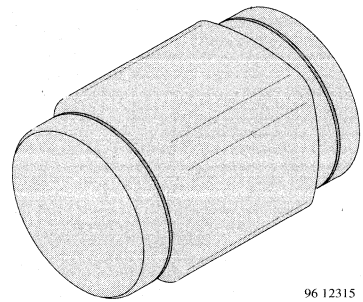

Applications

Extreme fast switches

Absolute Maximum Ratings

$T_j = 25°C$

Parameter	Test Conditions	Type	Symbol	Value	Unit
Repetitive peak reverse voltage			V_{RRM}	35	V
Reverse voltage			V_R	25	V
Peak forward surge current	t_p=1µs		I_{FSM}	2	A
Repetitive peak forward current			I_{FRM}	450	mA
Forward current			I_F	200	mA
Average forward current	V_R=0		I_{FAV}	150	mA
Power dissipation			P_V	500	mW
Junction temperature			T_j	175	°C
Storage temperature range			T_{stg}	–65...+175	°C

Maximum Thermal Resistance

$T_j = 25°C$

Parameter	Test Conditions	Symbol	Value	Unit
Junction ambient	mounted on epoxy–glass hard issue, Fig. 1, 35µm copper clad, 0.9 mm^2 copper area per electrode	R_{thJA}	500	K/W

Characteristics

$T_j = 25°C$

Parameter	Test Conditions	Type	Symbol	Min	Typ	Max	Unit
Forward voltage	I_F=30mA		V_F			1	V
Reverse current	V_R=25V		I_R			100	nA
	V_R=25V, T_j=150°C		I_R			100	µA
Breakdown voltage	I_R=5µA, t_p/T=0.01, t_p=0.3ms		$V_{(BR)}$	35			V
Diode capacitance	V_R=0, f=1MHz, V_{HF}=50mV		C_D			4	pF
Reverse recovery time	I_F=I_R=10mA, i_R=1mA		t_{rr}			4	ns
	I_F=10mA, V_R=6V, i_R=0.1xI_R, R_L=100Ω		t_{rr}			2	ns

Typical Characteristics ($T_j = 25°C$ unless otherwise specified)

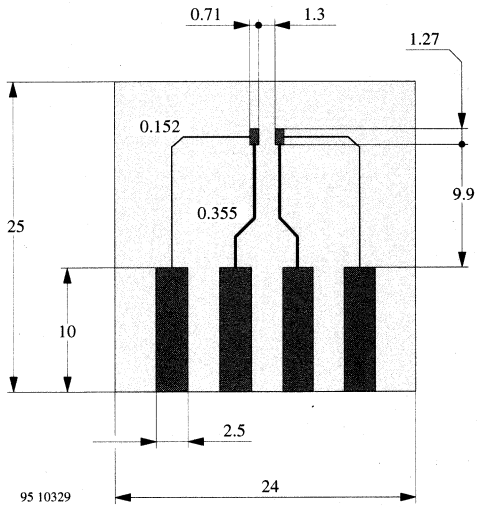

Figure 1. Board for R_{thJA} definition (in mm)

Reflow Soldering

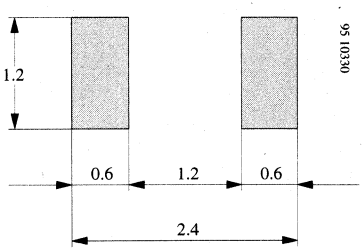

Figure 2. Recommended foot pads (in mm)

Wave Soldering

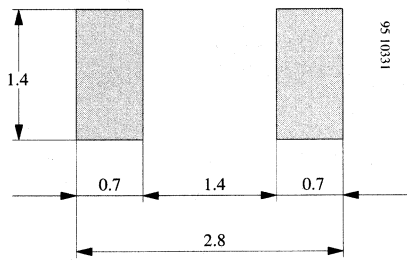

Figure 3. Recommended foot pads (in mm)

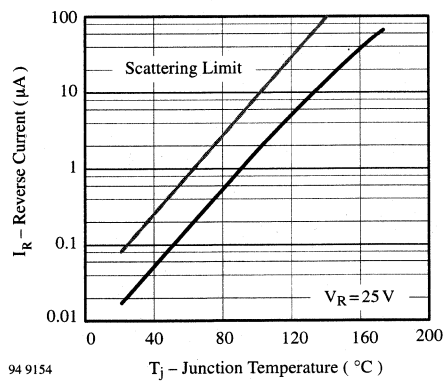

Figure 4. Reverse Current vs. Junction Temperature

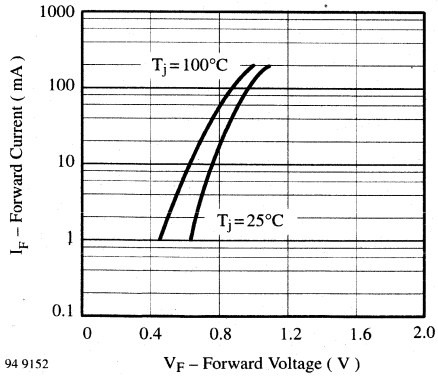

Figure 5. Forward Current vs. Forward Voltage

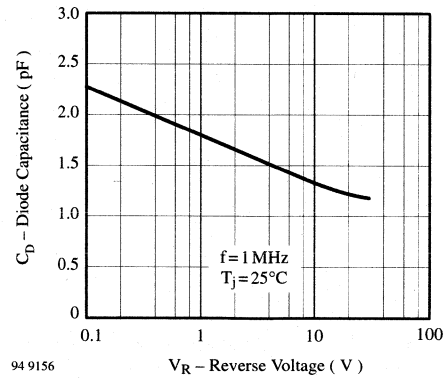

Figure 6. Diode Capacitance vs. Reverse Voltage

Dimensions in mm

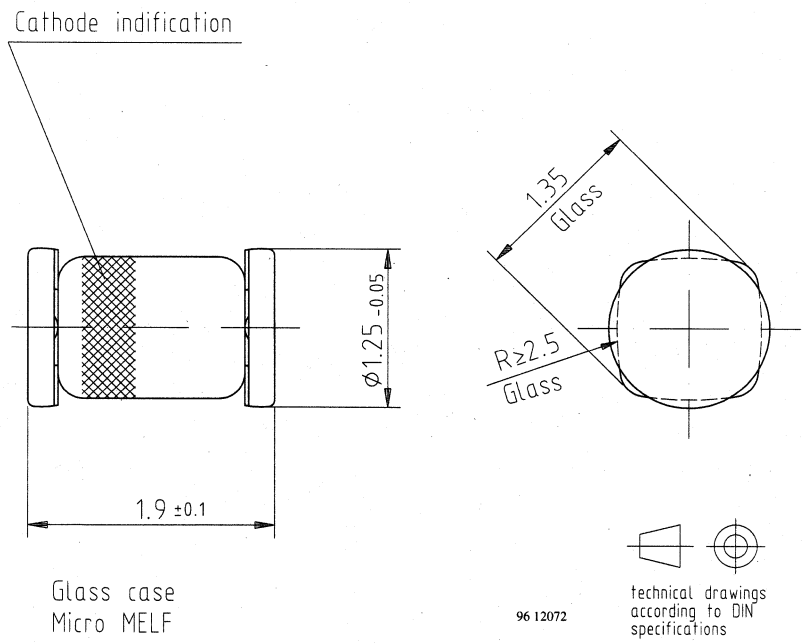

Super Fast Soft Recovery Rectifier

Features

- Glass passivated
- Hermetically sealed axial leaded glass envelope
- Low reverse current
- High reverse voltage

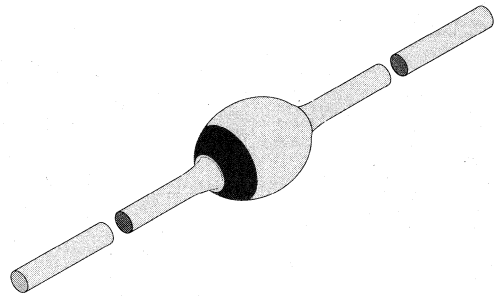

94 9539

Applications

Switched mode power supplies
High–frequency inverter circuits

Absolute Maximum Ratings

$T_j = 25°C$

Parameter	Test Conditions	Type	Symbol	Value	Unit
Repetitive peak reverse voltage		SF4001	V_{RRM}	50	V
		SF4002	V_{RRM}	100	V
		SF4003	V_{RRM}	200	V
		SF4004	V_{RRM}	400	V
		SF4005	V_{RRM}	600	V
		SF4006	V_{RRM}	800	V
		SF4007	V_{RRM}	1000	V
Reverse voltage		SF4001	V_R	50	V
		SF4002	V_R	100	V
		SF4003	V_R	200	V
		SF4004	V_R	400	V
		SF4005	V_R	600	V
		SF4006	V_R	800	V
		SF4007	V_R	1000	V
Peak forward surge current	t_p=10 ms, half sinewave		I_{FSM}	30	A
Average forward current	Lead length l = 10 mm, $T_L = 25°C$		I_{FAV}	1	A
Junction temperature			T_j	175	°C
Storage temperature range			T_{stg}	–55...+175	°C

Maximum Thermal Resistance

$T_j = 25°C$

Parameter	Test Conditions	Symbol	Value	Unit
Junction ambient	Lead length l = 10 mm, T_L = constant	R_{thJA}	45	K/W
	mounted on epoxy–glass hard tissue, Fig. 1, d = 25 mm	R_{thJA}	100	K/W

Characteristics

$T_j = 25°C$

Parameter	Test Conditions	Type	Symbol	Min	Typ	Max	Unit
Forward voltage	$I_F = 1$ A	SF4001	V_F			1	V
		SF4002	V_F			1	V
		SF4003	V_F			1	V
		SF4004	V_F			1	V
		SF4005	V_F			1.7	V
		SF4006	V_F			1.7	V
		SF4007	V_F			1.7	V
Reverse current	$V_R=V_{RRM}$		I_R			5	µA
	$V_R=V_{RRM}$, T_j=125°C		I_R			50	µA
Reverse breakdown voltage	I_R=100µA	SF4001	$V_{(BR)R}$	50			V
		SF4002	$V_{(BR)R}$	100			V
		SF4003	$V_{(BR)R}$	200			V
		SF4004	$V_{(BR)R}$	400			V
		SF4005	$V_{(BR)R}$	600			V
		SF4006	$V_{(BR)R}$	800			V
		SF4007	$V_{(BR)R}$	1000			V
Reverse recovery time	I_F=0.5A, I_R=1A, i_R=0.25A	SF4001	t_{rr}			50	ns
		SF4002	t_{rr}			50	ns
		SF4003	t_{rr}			50	ns
		SF4004	t_{rr}			50	ns
		SF4005	t_{rr}			75	ns
		SF4006	t_{rr}			75	ns
		SF4007	t_{rr}			75	ns

Typical Characteristics (T_j = 25°C unless otherwise specified)

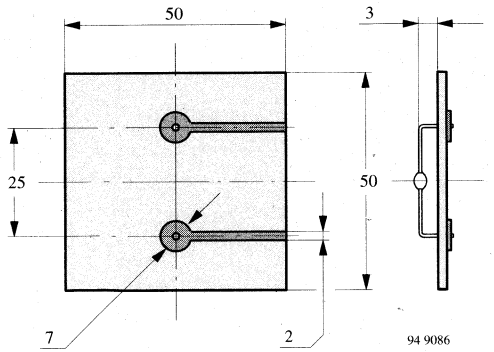

Figure 1. Epoxy glass hard tissue, board thickness 1.5 mm, $R_{thJA} \leqq 100$ K/W

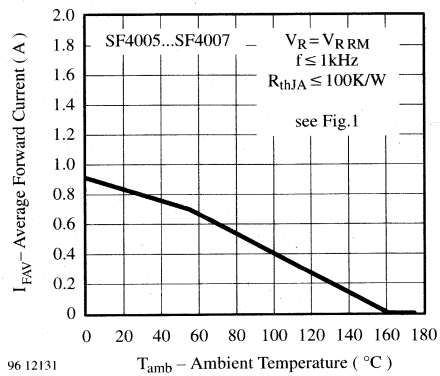

Figure 4. Average Forward Current vs. Ambient Temperature

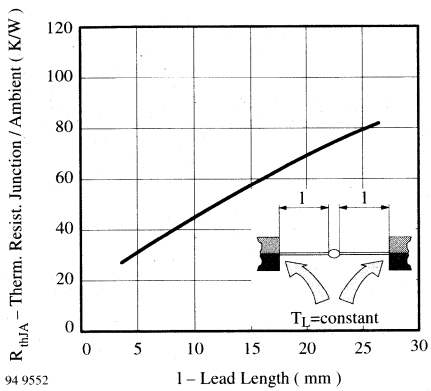

Figure 2. Thermal Resistance vs. Lead Length

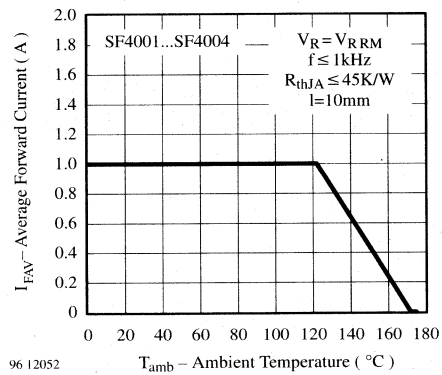

Figure 5. Average Forward Current vs. Ambient Temperature

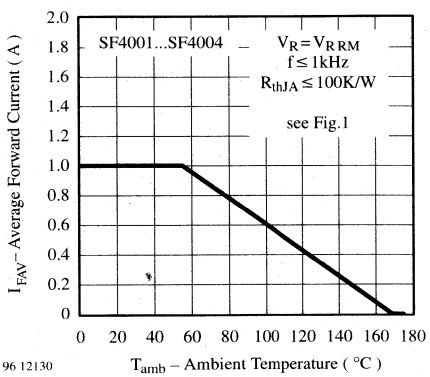

Figure 3. Average Forward Current vs. Ambient Temperature

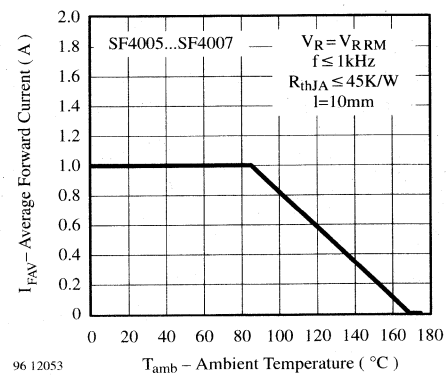

Figure 6. Average Forward Current vs. Ambient Temperature

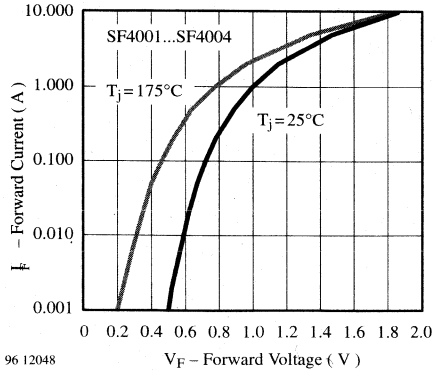

Figure 7. Forward Current vs. Forward Voltage

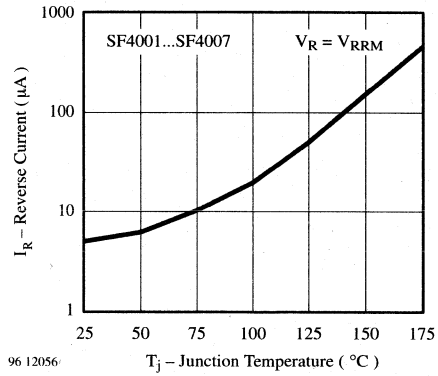

Figure 9. Reverse Current vs. Junction Temperature

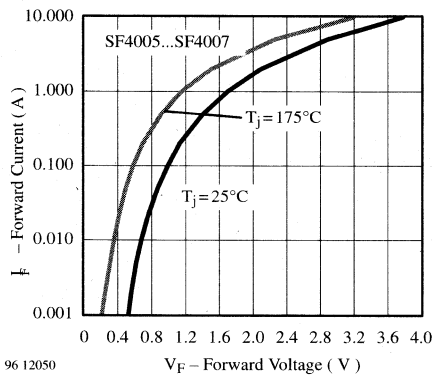

Figure 8. Forward Current vs. Forward Voltage

Dimensions in mm

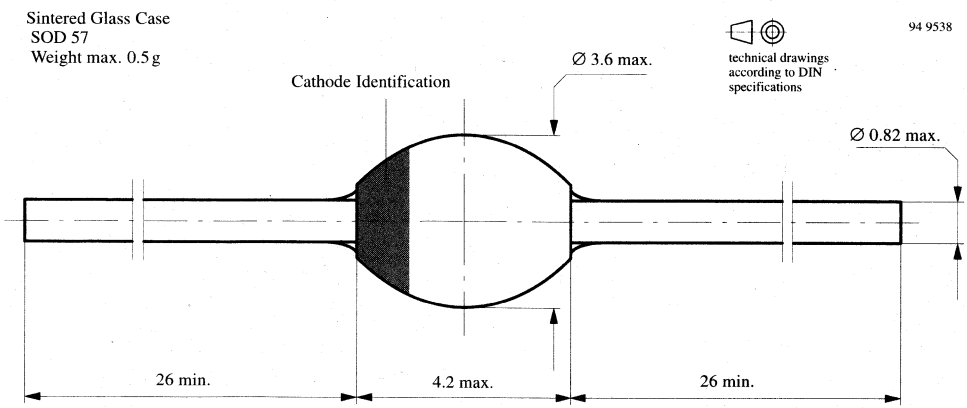

Super Fast Soft Recovery Rectifier

Features

- Glass passivated
- Hermetically sealed axial leaded glass envelope
- Low reverse current
- High reverse voltage

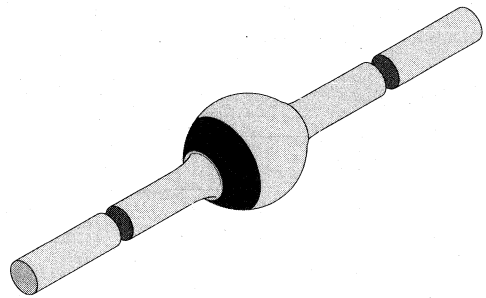

94 9588

Applications

Switched mode power supplies
High–frequency inverter circuits

Absolute Maximum Ratings

$T_j = 25°C$

Parameter	Test Conditions	Type	Symbol	Value	Unit
Repetitive peak reverse voltage		SF5400	V_{RRM}	50	V
		SF5401	V_{RRM}	100	V
		SF5402	V_{RRM}	200	V
		SF5403	V_{RRM}	300	V
		SF5404	V_{RRM}	400	V
		SF5405	V_{RRM}	500	V
		SF5406	V_{RRM}	600	V
		SF5407	V_{RRM}	800	V
		SF5408	V_{RRM}	1000	V
Reverse voltage		SF5400	V_R	50	V
		SF5401	V_R	100	V
		SF5402	V_R	200	V
		SF5403	V_R	300	V
		SF5404	V_R	400	V
		SF5405	V_R	500	V
		SF5406	V_R	600	V
		SF5407	V_R	800	V
		SF5408	V_R	1000	V
Peak forward surge current	t_p = 10 ms, half sinewave		I_{FSM}	150	A
Average forward current			I_{FAV}	3	A
Junction temperature			T_j	175	°C
Storage temperature range			T_{stg}	–55...+175	°C

Maximum Thermal Resistance

$T_j = 25°C$

Parameter	Test Conditions	Symbol	Value	Unit
Junction ambient	Lead length l = 10 mm, T_L = constant	R_{thJA}	25	K/W

Characteristics

$T_j = 25°C$

Parameter	Test Conditions	Type	Symbol	Min	Typ	Max	Unit
Forward voltage	$I_F = 3$ A	SF5400	V_F			1.1	V
		SF5401	V_F			1.1	V
		SF5402	V_F			1.1	V
		SF5403	V_F			1.1	V
		SF5404	V_F			1.1	V
		SF5405	V_F			1.7	V
		SF5406	V_F			1.7	V
		SF5407	V_F			1.7	V
		SF5408	V_F			1.7	V
Reverse current	$V_R=V_{RRM}$		I_R			5	µA
	$V_R=V_{RRM}$, T_j=125°C		I_R			50	µA
Reverse breakdown voltage	I_R=100µA	SF5400	$V_{(BR)R}$	60			V
		SF5401	$V_{(BR)R}$	110			V
		SF5402	$V_{(BR)R}$	220			V
		SF5403	$V_{(BR)R}$	330			V
		SF5404	$V_{(BR)R}$	440			V
		SF5405	$V_{(BR)R}$	550			V
		SF5406	$V_{(BR)R}$	660			V
		SF5407	$V_{(BR)R}$	880			V
		SF5408	$V_{(BR)R}$	1100			V
Reverse recovery time	I_F=0.5A, I_R=1A, i_R=0.25A	SF5400	t_{rr}			50	ns
		SF5401	t_{rr}			50	ns
		SF5402	t_{rr}			50	ns
		SF5403	t_{rr}			50	ns
		SF5404	t_{rr}			50	ns
		SF5405	t_{rr}			75	ns
		SF5406	t_{rr}			75	ns
		SF5407	t_{rr}			75	ns
		SF5408	t_{rr}			75	ns

Typical Characteristics (T_j = 25°C unless otherwise specified)

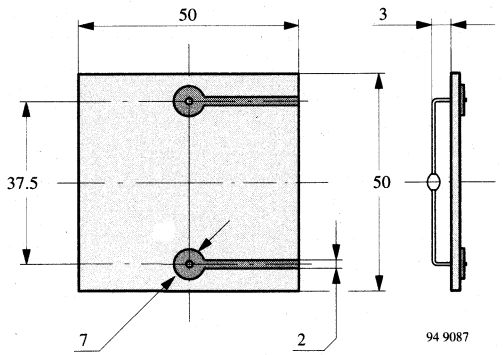

Figure 1. Epoxy glass hard tissue, board thickness 1.5 mm, $R_{thJA} \leqq 70$ K/W

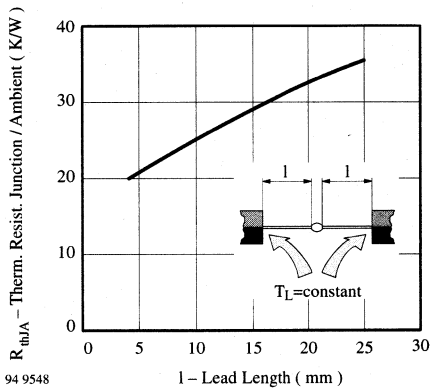

Figure 2. Thermal Resistance vs. Lead Length

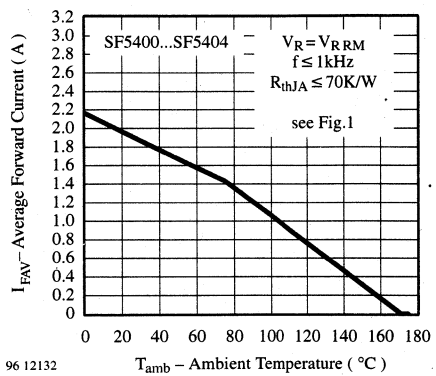

Figure 3. Average Forward Current vs. Ambient Temperature

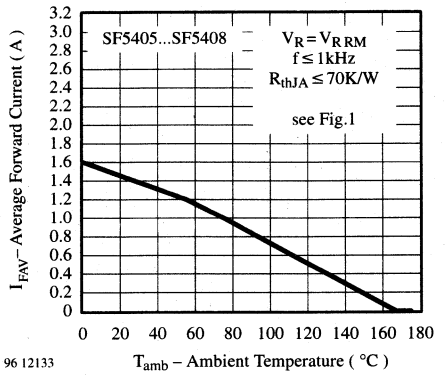

Figure 4. Average Forward Current vs. Ambient Temperature

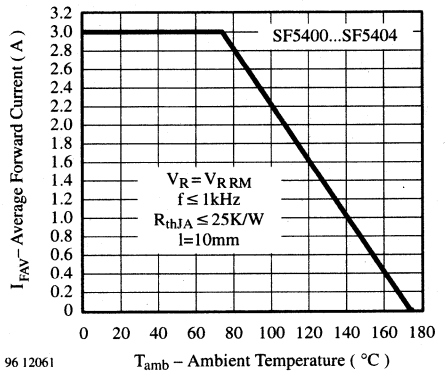

Figure 5. Average Forward Current vs. Ambient Temperature

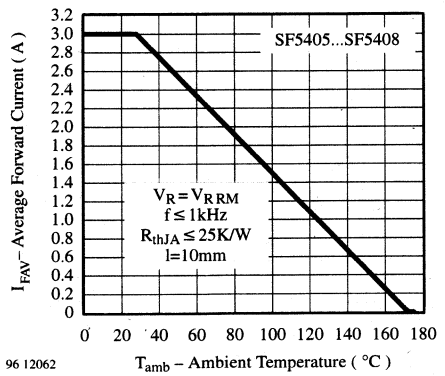

Figure 6. Average Forward Current vs. Ambient Temperature

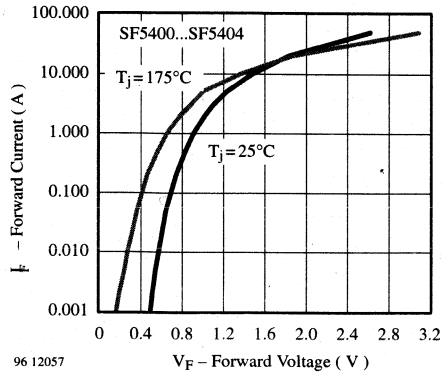

Figure 7. Forward Current vs. Forward Voltage

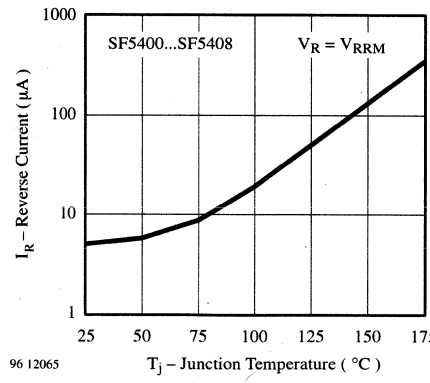

Figure 9. Reverse Current vs. Junction Temperature

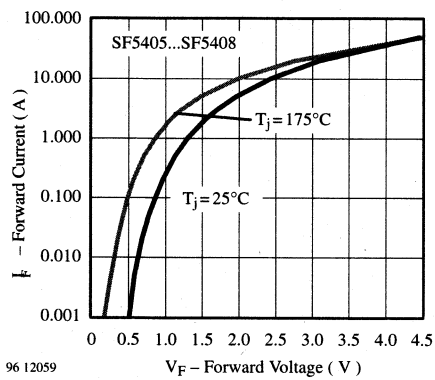

Figure 8. Forward Current vs. Forward Voltage

Dimensions in mm

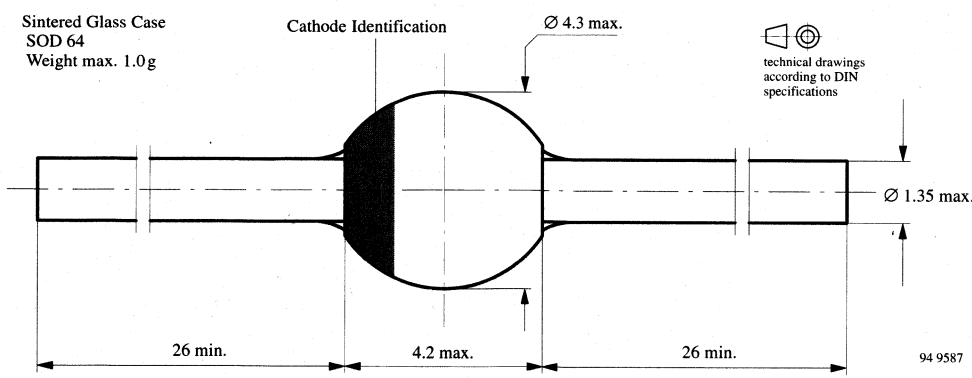

Silicon Epitaxial Planar Diodes

Features

- Electrically equivalent diodes:
  1N4148 – 1N914
  1N4448 – 1N914B

Applications

Extreme fast switches

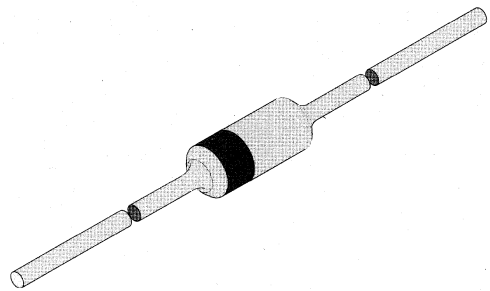

94 9367

Absolute Maximum Ratings

$T_j = 25°C$

Parameter	Test Conditions	Type	Symbol	Value	Unit
Repetitive peak reverse voltage			V_{RRM}	100	V
Reverse voltage			V_R	75	V
Peak forward surge current	t_p=1µs		I_{FSM}	2	A
Repetitive peak forward current			I_{FRM}	500	mA
Forward current			I_F	300	mA
Average forward current	V_R=0		I_{FAV}	150	mA
Power dissipation	l=4mm, T_L=45°C		P_V	440	mW
	l=4mm, $T_L \leqq 25°C$		P_V	500	mW
Junction temperature			T_j	200	°C
Storage temperature range			T_{stg}	–65...+200	°C

Maximum Thermal Resistance

$T_j = 25°C$

Parameter	Test Conditions	Symbol	Value	Unit
Junction ambient	l=4mm, T_L=constant	R_{thJA}	350	K/W

Characteristics

T_j = 25°C

Parameter	Test Conditions	Type	Symbol	Min	Typ	Max	Unit
Forward voltage	I_F=5mA	1N4448	V_F	0.62		0.72	V
	I_F=10mA	1N4148	V_F			1	V
	I_F=100mA	1N4448	V_F			1	V
Reverse current	V_R=20 V		I_R			25	nA
	V_R=20 V, T_j=150 °C		I_R			50	µA
	V_R=75 V		I_R			5	µA
Breakdown voltage	I_R=100µA, t_p/T=0.01, t_p=0.3ms		$V_{(BR)}$	100			V
Diode capacitance	V_R=0, f=1MHz, V_{HF}=50mV		C_D			4	pF
Rectification efficiency	V_{HF}=2V, f=100MHz		η_r	45			%
Reverse recovery time	I_F=I_R=10mA, i_R=1mA		t_{rr}			8	ns
	I_F=10mA, V_R=6V, i_R=0.1xI_R, R_L=100Ω		t_{rr}			4	ns

Typical Characteristics (T_j = 25°C unless otherwise specified)

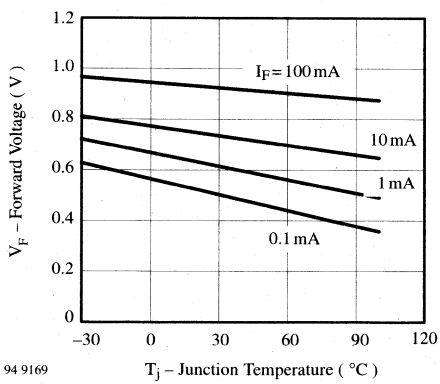

Figure 1. Forward Voltage vs. Junction Temperature

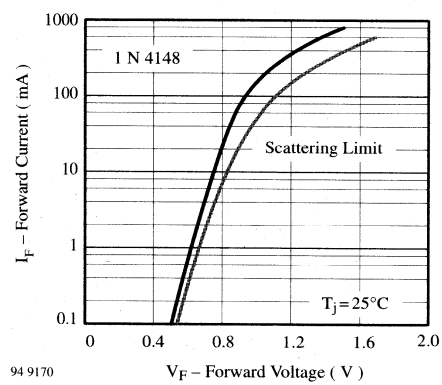

Figure 2. Forward Current vs. Forward Voltage

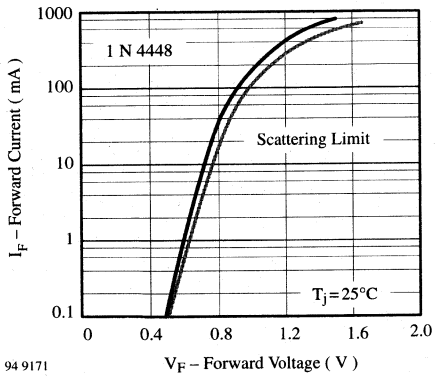

Figure 3. Forward Current vs. Forward Voltage

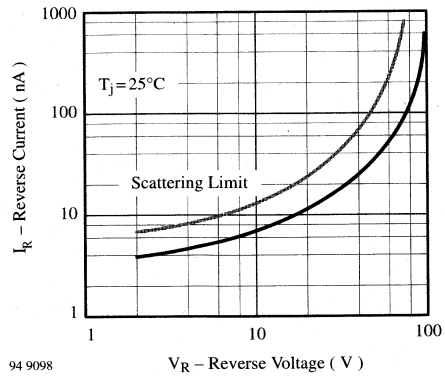

Figure 4. Reverse Current vs. Reverse Voltage

Dimensions in mm

technical drawings according to DIN specifications

94 9366

Standard Glass Case
54 A 2 DIN 41880
JEDEC DO 35
Weight max. 0.3 g

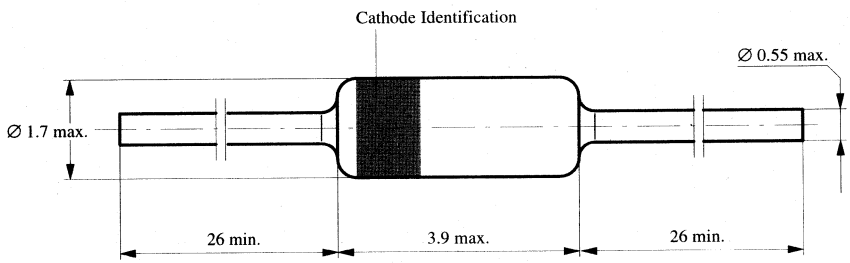

1N4150

Silicon Epitaxial Planar Diode

Features

- Low forward voltage drop
- High forward current capability

Applications

High speed switch and general purpose use in computer and industrial applications

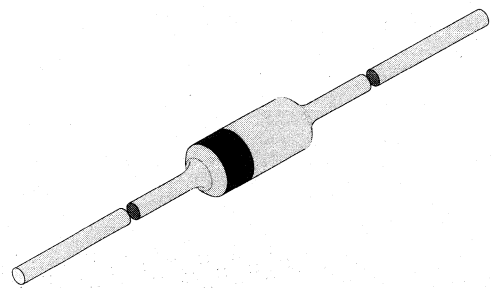

94 9367

Absolute Maximum Ratings

$T_j = 25°C$

Parameter	Test Conditions	Type	Symbol	Value	Unit
Repetitive peak reverse voltage			V_{RRM}	50	V
Reverse voltage			V_R	50	V
Peak forward surge current	t_p=1µs		I_{FSM}	4	A
Forward current			I_F	600	mA
Average forward current	V_R=0		I_{FAV}	300	mA
Power dissipation	l=4mm, T_L=45°C		P_V	440	mW
	l=4mm, $T_L \leqq 25°C$		P_V	500	mW
Junction temperature			T_j	175	°C
Storage temperature range			T_{stg}	–65...+175	°C

Maximum Thermal Resistance

$T_j = 25°C$

Parameter	Test Conditions	Symbol	Value	Unit
Junction ambient	l=4mm, T_L=constant	R_{thJA}	350	K/W

Characteristics

$T_j = 25°C$

Parameter	Test Conditions	Type	Symbol	Min	Typ	Max	Unit
Forward voltage	I_F=1mA		V_F	0.54		0.62	V
	I_F=10mA		V_F	0.66		0.74	V
	I_F=50mA		V_F	0.76		0.86	V
	I_F=100mA		V_F	0.82		0.92	V
	I_F=200mA		V_F	0.87		1.0	V
Reverse current	V_R=50V		I_R			100	nA
	V_R=50V, T_j=150°C		I_R			100	µA
Diode capacitance	V_R=0, f=1MHz, V_{HF}=50mV		C_D			2.5	pF
Reverse recovery time	I_F=I_R=10...100mA, i_R=0.1xI_R, R_L=100Ω		t_{rr}			4	ns

Typical Characteristics ($T_j = 25°C$ unless otherwise specified)

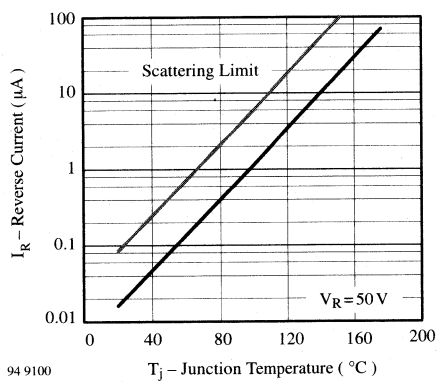

Figure 1. Reverse Current vs. Junction Temperature

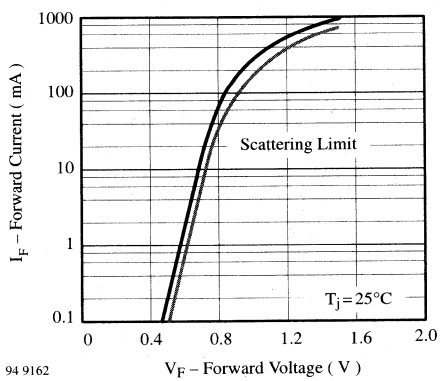

Figure 2. Forward Current vs. Forward Voltage

Dimensions in mm

technical drawings according to DIN specifications

94 9366

Standard Glass Case
54 A 2 DIN 41880
JEDEC DO 35
Weight max. 0.3 g

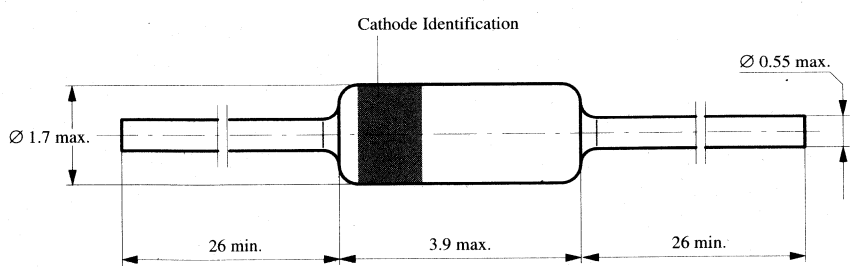

1N4151

Silicon Epitaxial Planar Diode

Applications

Extreme fast switches

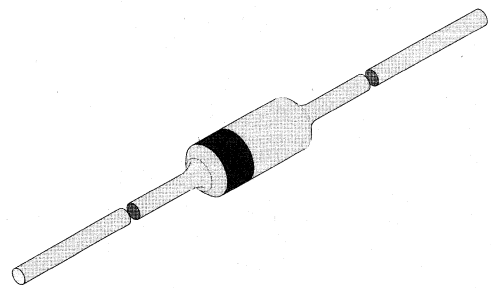

94 9367

Absolute Maximum Ratings

$T_j = 25°C$

Parameter	Test Conditions	Type	Symbol	Value	Unit
Repetitive peak reverse voltage			V_{RRM}	75	V
Reverse voltage			V_R	50	V
Peak forward surge current	t_p=1µs		I_{FSM}	2	A
Repetitive peak forward current			I_{FRM}	500	mA
Forward current			I_F	300	mA
Average forward current	V_R=0		I_{FAV}	150	mA
Power dissipation	l=4mm, T_L=45°C		P_V	440	mW
	l=4mm, $T_L \leqq 25°C$		P_V	500	mW
Junction temperature			T_j	175	°C
Storage temperature range			T_{stg}	–65...+175	°C

Maximum Thermal Resistance

$T_j = 25°C$

Parameter	Test Conditions	Symbol	Value	Unit
Junction ambient	l=4mm, T_L=constant	R_{thJA}	350	K/W

Characteristics

$T_j = 25°C$

Parameter	Test Conditions	Type	Symbol	Min	Typ	Max	Unit
Forward voltage	I_F=50mA		V_F		0.88	1	V
Reverse current	V_R=50V		I_R		14	50	nA
	V_R=50V, T_j=150°C		I_R			50	µA
Breakdown voltage	I_R=5µA		$V_{(BR)}$	75			V
Diode capacity	V_R=0, f=1MHz, V_{HF}=50mV		C_D			2	pF
Reverse recovery time	I_F=I_R=10mA, i_R=1mA		t_{rr}			4	ns
	I_F=10mA, V_R=6V, i_R=0.1xI_R, R_L=100Ω		t_{rr}			2	ns

Typical Characteristics (T_j = 25°C unless otherwise specified)

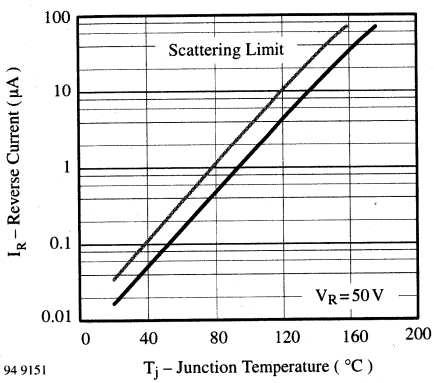

Figure 1. Reverse Current vs. Junction Temperature

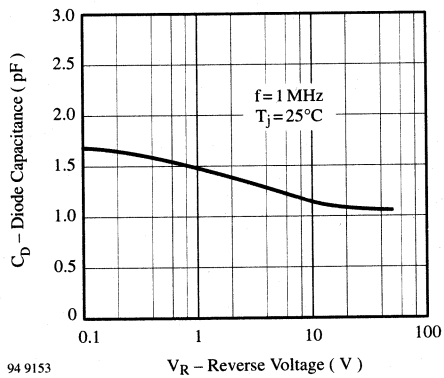

Figure 3. Diode Capacitance vs. Reverse Voltage

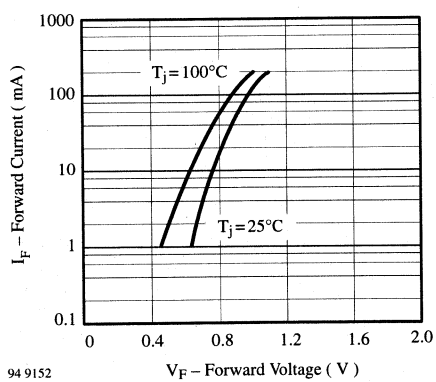

Figure 2. Forward Current vs. Forward Voltage

Dimensions in mm

technical drawings
according to DIN
specifications

94 9366

Standard Glass Case
54 A 2 DIN 41880
JEDEC DO 35
Weight max. 0.3 g

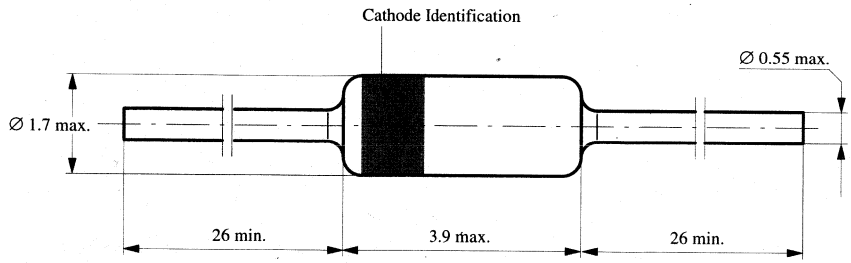

Silicon Epitaxial Planar Diode

Applications

Extreme fast switches

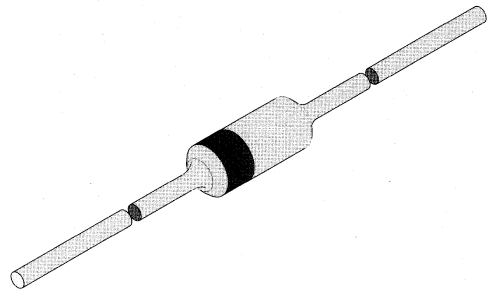

94 9367

Absolute Maximum Ratings

$T_j = 25°C$

Parameter	Test Conditions	Type	Symbol	Value	Unit
Repetitive peak reverse voltage			V_{RRM}	35	V
Reverse voltage			V_R	25	V
Peak forward surge current	t_p=1µs		I_{FSM}	2	A
Repetitive peak forward current			I_{FRM}	500	mA
Forward current			I_F	300	mA
Average forward current	V_R=0		I_{FAV}	150	mA
Power dissipation	l=4mm, T_L=45°C		P_V	440	mW
	l=4mm, $T_L \leqq 25°C$		P_V	500	mV
Junction temperature			T_j	175	°C
Storage temperature range			T_{stg}	–65...+175	°C

Maximum Thermal Resistance

$T_j = 25°C$

Parameter	Test Conditions	Symbol	Value	Unit
Junction ambient	l=4mm, T_L=constant	R_{thJA}	350	K/W

Characteristics

$T_j = 25°C$

Parameter	Test Conditions	Type	Symbol	Min	Typ	Max	Unit
Forward voltage	I_F=30mA		V_F		0.88	1	V
Reverse current	V_R=25V		I_R		9	100	nA
	V_R=25V, T_j=150°C		I_R			100	µA
Breakdown voltage	I_R=5µA, t_p/T=0.01, t_p=0.3ms		$V_{(BR)}$	35			V
Diode capacitance	V_R=0, f=1MHz, V_{HF}=50mV		C_D			4	pF
Reverse recovery time	I_F=I_R=10mA, i_R=1mA		t_{rr}			4	ns
	I_F=10mA, V_R=6V, i_R=0.1xI_R, R_L=100Ω		t_{rr}			2	ns

Typical Characteristics (T_j = 25°C unless otherwise specified)

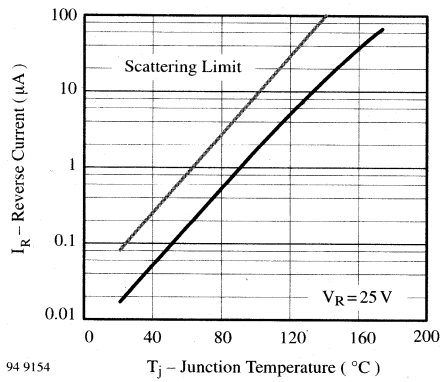

Figure 1. Reverse Current vs. Junction Temperature

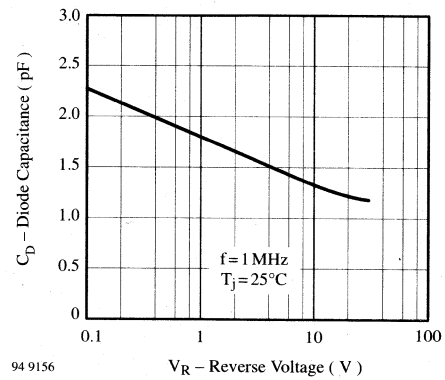

Figure 3. Diode Capacitance vs. Reverse Voltage

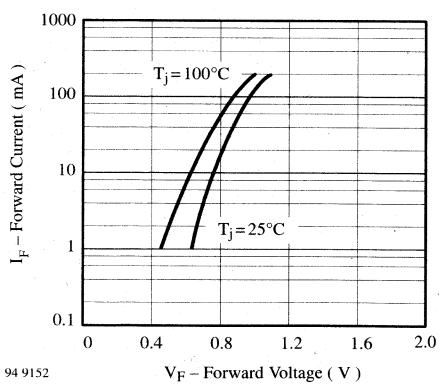

Figure 2. Forward Current vs. Forward Voltage

Dimensions in mm

technical drawings
according to DIN
specifications

94 9366

Standard Glass Case
54 A 2 DIN 41880
JEDEC DO 35
Weight max. 0.3 g

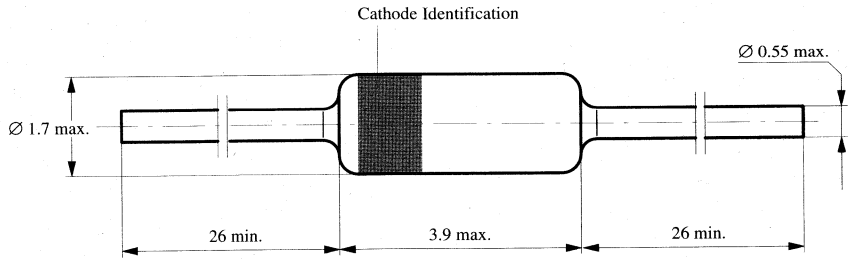

Fast Silicon Mesa Rectifiers

Features

- Glass passivated junction
- Hermetically sealed package
- Soft recovery characteristics
- Low reverse current
- Low forward voltage drop
- High pulse current capability

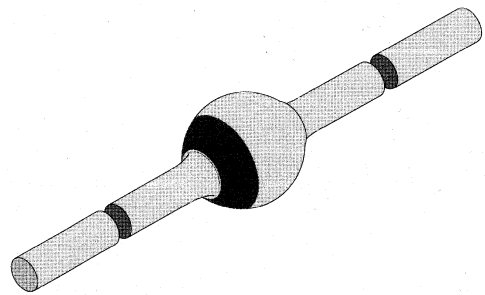

94 9588

Applications

Fast rectifiers in S.M.P.S

Absolute Maximum Ratings

$T_j = 25°C$

Parameter	Test Conditions	Type	Symbol	Value	Unit
Reverse voltage, repetitive peak reverse voltage		1N5417	$V_R=V_{RRM}$	200	V
		1N5418	$V_R=V_{RRM}$	400	V
Peak forward surge current	t_p=10ms, single half sine wave		I_{FSM}	100	A
Average forward current	T_{amb}=45°C		I_{FAV}	3	A
Junction temperature			T_j	175	°C
Storage temperature range			T_{stg}	–65...+175	°C

Maximum Thermal Resistance

$T_j = 25°C$

Parameter	Test Conditions	Symbol	Value	Unit
Junction ambient	l=10mm, T_L=constant	R_{thJA}	25	K/W
	on PC board with spacing 37.5mm	R_{thJA}	70	K/W

Characteristics

$T_j = 25°C$

Parameter	Test Conditions	Type	Symbol	Min	Typ	Max	Unit
Forward voltage	I_F=3A		V_F			1.1	V
	I_F=9A		V_F			1.5	V
Reverse current	$V_R=V_{RRM}$		I_R			1	µA
	$V_R=V_{RRM}$, T_j=100°C		I_R			20	µA
Reverse recovery time	I_F=0.5A, I_R=1A, i_R=0.25A		t_{rr}		75	100	ns

Typical Characteristics (T_j = 25°C unless otherwise specified)

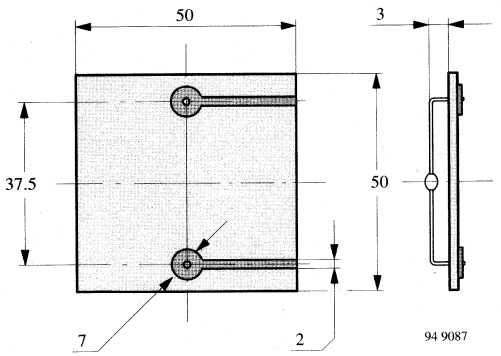

Figure 1. Epoxy glass hard tissue, board thickness 1.5 mm, $R_{thJA} \leqq 70$ K/W

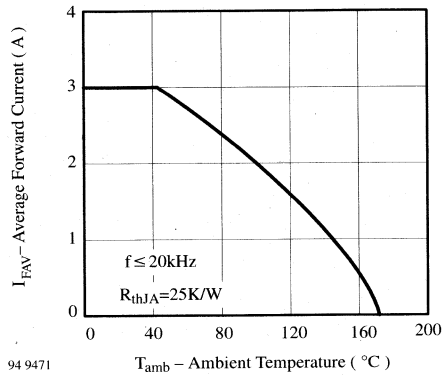

Figure 4. Average Forward Current vs. Ambient Temperature

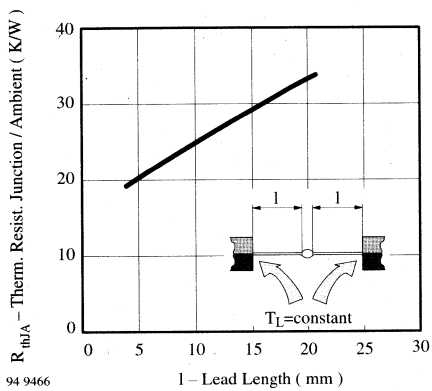

Figure 2. Thermal Resistance vs. Lead Length

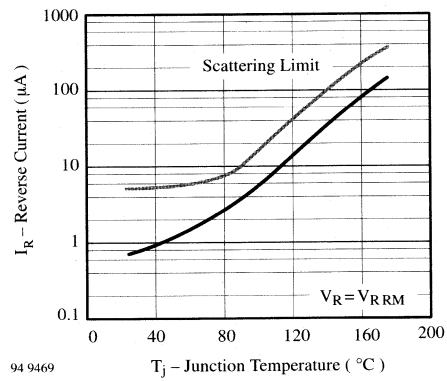

Figure 5. Reverse Current vs. Junction Temperature

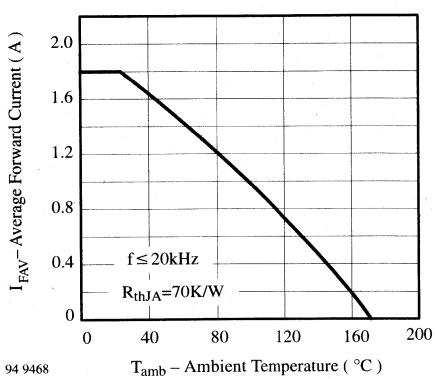

Figure 3. Average Forward Current vs. Ambient Temperature

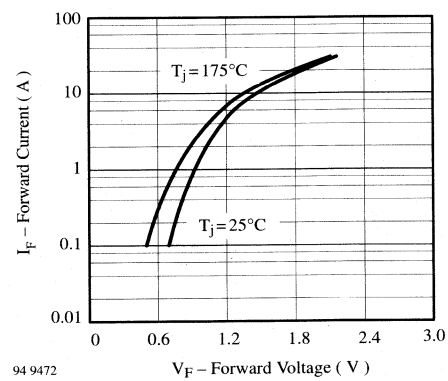

Figure 6. Forward Current vs. Forward Voltage

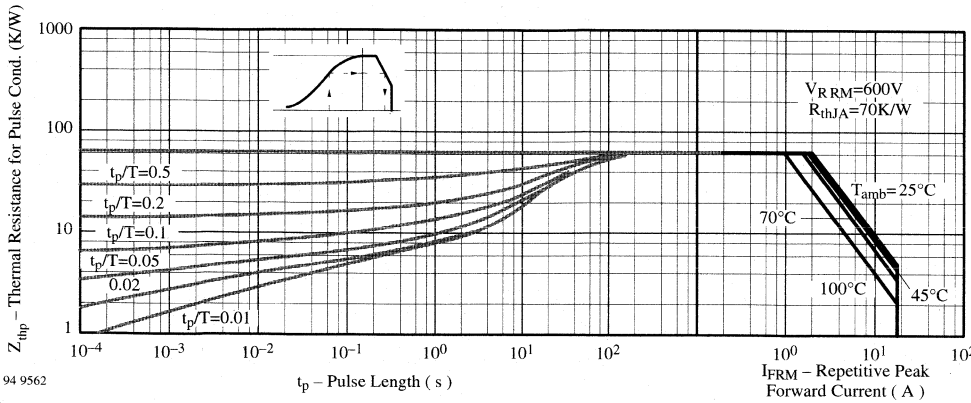

Figure 7. Thermal Response

Dimensions in mm

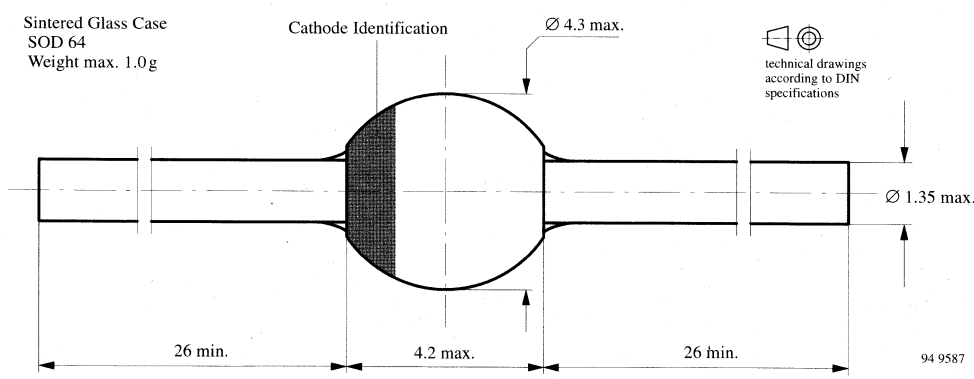

General Information

Diodes

Z- and Suppressor Diodes

Addresses

Silicon Z–Diodes

Features

- Glass passivated junction
- High reliability
- Voltage range 10V to 270V
- Fits onto 5 mm SMD footpads
- Wave and reflow solderable

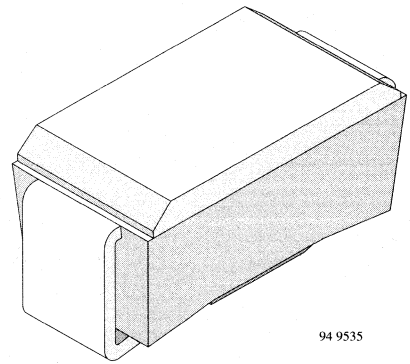

Applications

Voltage stabilization

Absolute Maximum Ratings

$T_j = 25°C$

Parameter	Test Conditions	Type	Symbol	Value	Unit
Power dissipation	R_{thJA}<25K/W, T_{amb}=100°C		P_V	3	W
	R_{thJA}<100K/W, T_{amb}=50°C		P_V	1.25	W
Non repetitive peak surge power dissipation	t_p=100µs sq.pulse, T_j=25°C prior to surge		P_{ZSM}	600	W
Junction temperature			T_j	175	°C
Storage temperature range			T_{stg}	–65...+150	°C

Maximum Thermal Resistance

$T_j = 25°C$

Parameter	Test Conditions	Symbol	Value	Unit
Junction lead		R_{thJL}	25	K/W
Junction ambient	mounted on epoxy–glass hard tissue, Fig. 1a	R_{thJA}	150	K/W
	mounted on epoxy–glass hard tissue, Fig. 1b	R_{thJA}	125	K/W
	mounted on Al–oxid–ceramic (Al_2O_3), Fig. 1b	R_{thJA}	100	K/W

Characteristics

$T_j = 25°C$

Parameter	Test Conditions	Type	Symbol	Min	Typ	Max	Unit
Forward voltage	I_F=0.5A		V_F			1.2	V

Type BZG03C...	V_Z V			r_{zj} and TK_{VZ} at I_Z					I_R at V_R	
				Ω		%/K		mA	µA	V
	Min.	Typ.	Max.	Typ.	Max.	Typ.	Max.		Max.	
10	9.4	10	10.6	2	4	0.05	0.09	50	10	7.5
11	10.4	11	11.6	4	7	0.05	0.10	50	4	8.2
12	11.4	12	12.7	4	7	0.05	0.10	50	3	9.1
13	12.4	13	14.1	5	10	0.05	0.10	50	2	10
15	13.8	15	15.6	5	10	0.05	0.10	50	1	11
16	15.3	16	17.1	6	15	0.06	0.11	25	1	12
18	16.8	18	19.1	6	15	0.06	0.11	25	1	13
20	18.8	20	21.2	6	15	0.06	0.11	25	1	15
22	20.8	22	23.3	6	15	0.06	0.11	25	1	16
24	22.8	24	25.6	7	15	0.06	0.11	25	1	18
27	25.1	27	28.9	7	15	0.06	0.11	25	1	20
30	28	30	32	8	15	0.06	0.11	25	1	22
33	31	33	35	8	15	0.06	0.11	25	1	24
36	34	36	38	21	40	0.06	0.11	10	1	27
39	37	39	41	21	40	0.06	0.11	10	1	30
43	40	43	46	24	45	0.07	0.12	10	1	33
47	44	47	50	24	45	0.07	0.12	10	1	36
51	48	51	54	25	60	0.07	0.12	10	1	39
56	52	56	60	25	60	0.07	0.12	10	1	43
62	58	62	66	25	80	0.08	0.13	10	1	47
68	64	68	72	25	80	0.08	0.13	10	1	51
75	70	75	79	30	100	0.08	0.13	10	1	56
82	77	82	87	30	100	0.08	0.13	10	1	62
91	85	91	96	60	200	0.09	0.13	5	1	68
100	94	100	106	60	200	0.09	0.13	5	1	75
110	104	110	116	80	250	0.09	0.13	5	1	82
120	114	120	127	80	250	0.09	0.13	5	1	91
130	124	130	141	110	300	0.09	0.13	5	1	100
150	138	150	156	130	300	0.09	0.13	5	1	110
160	158	160	171	150	350	0.09	0.13	5	1	120
180	168	180	191	180	400	0.09	0.13	5	1	130
200	188	200	212	200	500	0.09	0.13	5	1	150
220	208	220	233	350	750	0.09	0.13	2	1	160
240	228	240	256	400	850	0.09	0.13	2	1	180
270	251	270	289	450	1000	0.09	0.13	2	1	200

Typical Characteristics (T_j = 25°C unless otherwise specified)

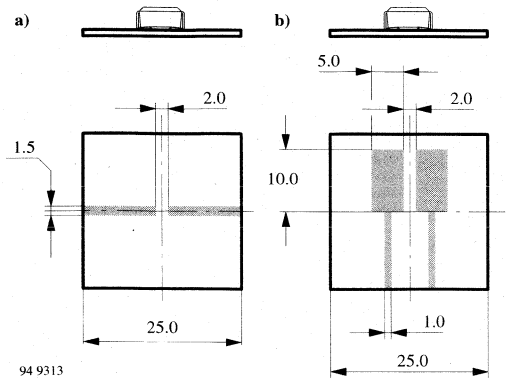

Figure 1. Boards for R_{thJA} definition (copper overlay 35µ)

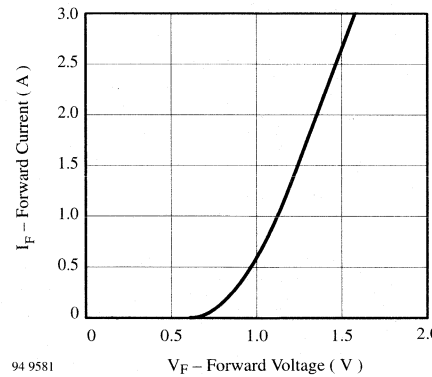

Figure 4. Forward Current vs. Forward Voltage

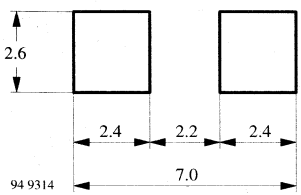

Figure 2. Recommended foot pads (in mm)

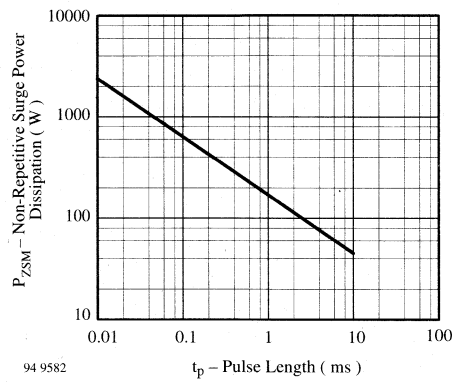

Figure 5. Non Repetitive Surge Power Dissipation vs. Pulse Length

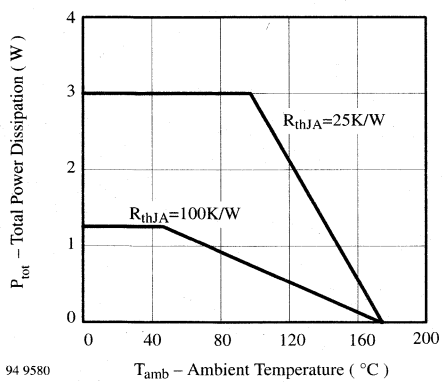

Figure 3. Total Power Dissipation vs. Ambient Temperature

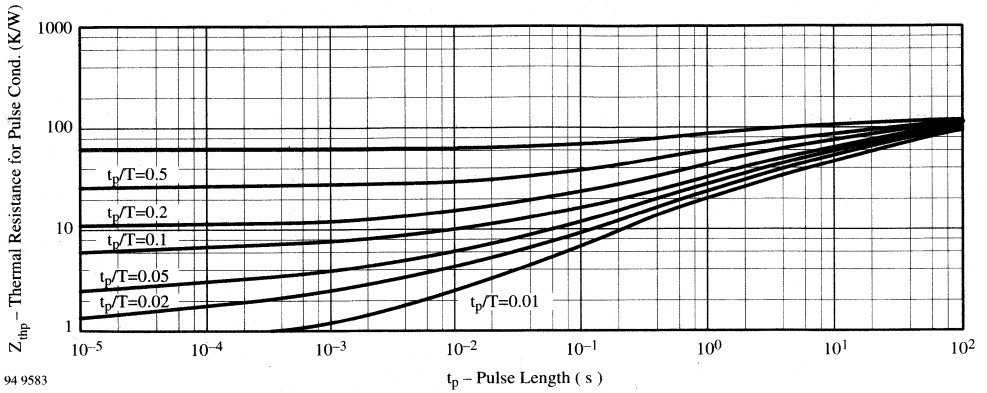

Figure 6. Thermal Response

Dimensions in mm

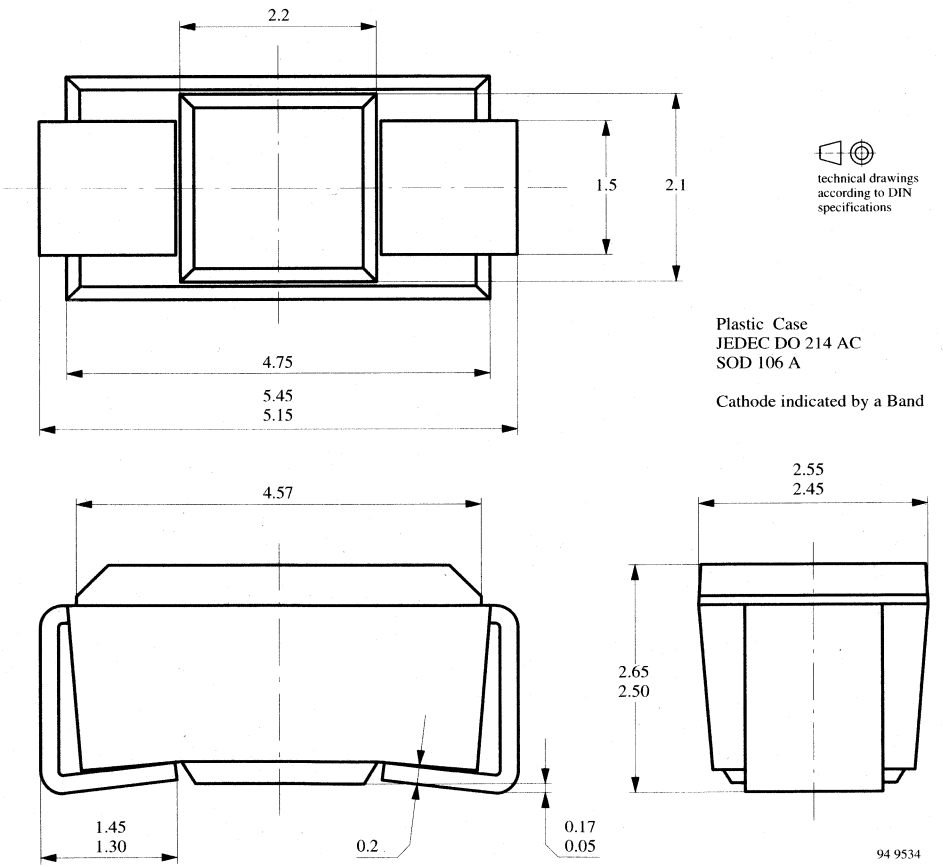

Silicon Transient Voltage Suppressors

Features

- Glass passivated junction
- High reliability
- Stand–off voltage range 8.2V to 220V
- Excellent clamping cabability
- Fast response time (typ. ≦ 1ps from 0 to V_{Zmin})

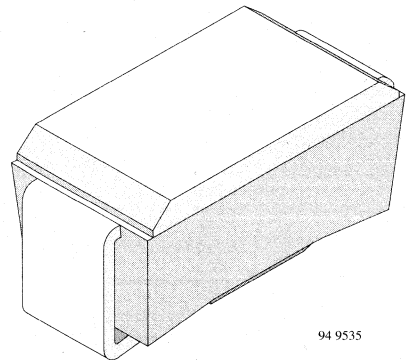

Applications

Protection from high voltage, high energy transients

Absolute Maximum Ratings

T_j = 25°C

Parameter	Test Conditions	Type	Symbol	Value	Unit
Power dissipation	R_{thJA}<25K/W, T_{amb}=100°C		P_V	3	W
	R_{thJA}<100K/W, T_{amb}=50°C		P_V	1.25	W
Non repetitive peak surge power dissipation	t_p=10/1000µs sq.pulse, T_j=25°C prior to surge		P_{ZSM}	300	W
Peak forward surge current	10ms single half sine wave		I_{FSM}	50	A
Junction temperature			T_j	175	°C
Storage temperature range			T_{stg}	–65...+150	°C

Maximum Thermal Resistance

T_j = 25°C

Parameter	Test Conditions	Symbol	Value	Unit
Junction lead		R_{thJL}	25	K/W
Junction ambient	mounted on epoxy–glass hard tissue, Fig. 1a	R_{thJA}	150	K/W
	mounted on epoxy–glass hard tissue, Fig. 1b	R_{thJA}	125	K/W
	mounted on Al–oxid–ceramic (Al_2O_3), Fig. 1b	R_{thJA}	100	K/W

Characteristics

T_j = 25°C

Parameter	Test Conditions	Type	Symbol	Min	Typ	Max	Unit
Forward voltage	I_F=0.5A		V_F			1.2	V

Type	Stand-off Voltage		Breakdown Voltage		Clamping Voltage	
	V_R	I_R	$V_{(BR)}$ at I_R		$V_{CL(R)}$ at I_{PP} *)	
BZG04...	V	µA	V	mA	V	A
		Max.	Min.		Max.	
8V2	8.2	20	9.4	50	14.8	20.3
9V1	9.1	5	10.4	50	15.7	19.1
10	10	5	11.4	50	17.0	17.7
11	11	5	12.4	50	18.9	15.9
12	12	5	13.8	50	20.9	14.4
13	13	5	15.3	25	22.9	13.1
15	15	5	16.8	25	25.6	11.7
16	16	5	18.8	25	28.4	10.6
18	18	5	20.8	25	31.0	9.7
20	20	5	22.8	25	33.8	8.9
22	22	5	25.1	25	38.1	7.9
24	24	5	28	25	42.2	7.1
27	27	5	31	25	46.2	6.5
30	30	5	34	10	50.1	6.0
33	33	5	37	10	54.1	5.5
36	36	5	40	10	60.7	4.9
39	39	5	44	10	65.5	4.6
43	43	5	48	10	70.8	4.2
47	47	5	52	10	78.6	3.8
51	51	5	58	10	86.5	3.5
56	56	5	64	10	94.4	3.2
62	62	5	70	10	103.5	2.9
68	68	5	77	10	114	2.6
75	75	5	85	5	126	2.4
82	82	5	94	5	139	2.2
91	91	5	104	5	152	2.0
100	100	5	114	5	167	1.8
110	110	5	124	5	185	1.6
120	120	5	138	5	204	1.5
130	130	5	153	5	224	1.3
150	150	5	168	5	249	1.2
160	160	5	188	5	276	1.1
180	180	5	208	2	305	1.0
200	200	5	228	2	336	0.9
220	220	5	251	2	380	0.8

*) 10/1000 µs pulse

Typical Characteristics (T_j = 25°C unless otherwise specified)

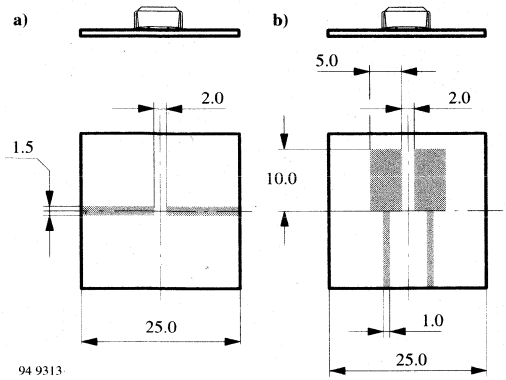

Figure 1. Boards for R_{thJA} definition (copper overlay 35µ)

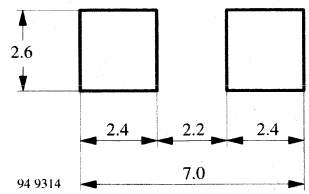

Figure 2. Recommended foot pads (in mm)

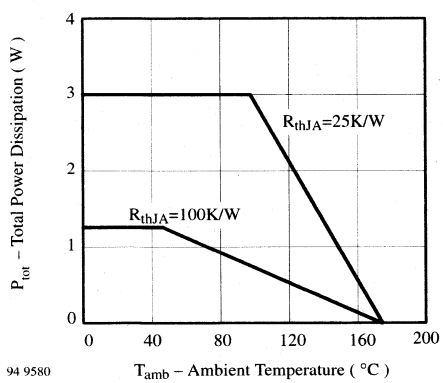

Figure 3. Total Power Dissipation vs. Ambient Temperature

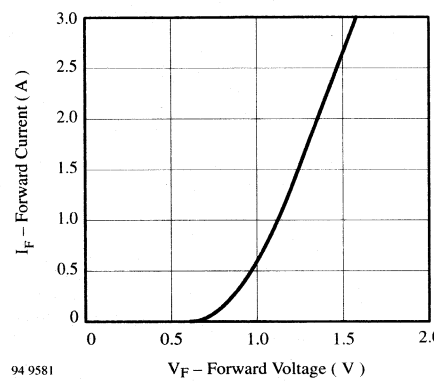

Figure 4. Forward Current vs. Forward Voltage

Dimensions in mm

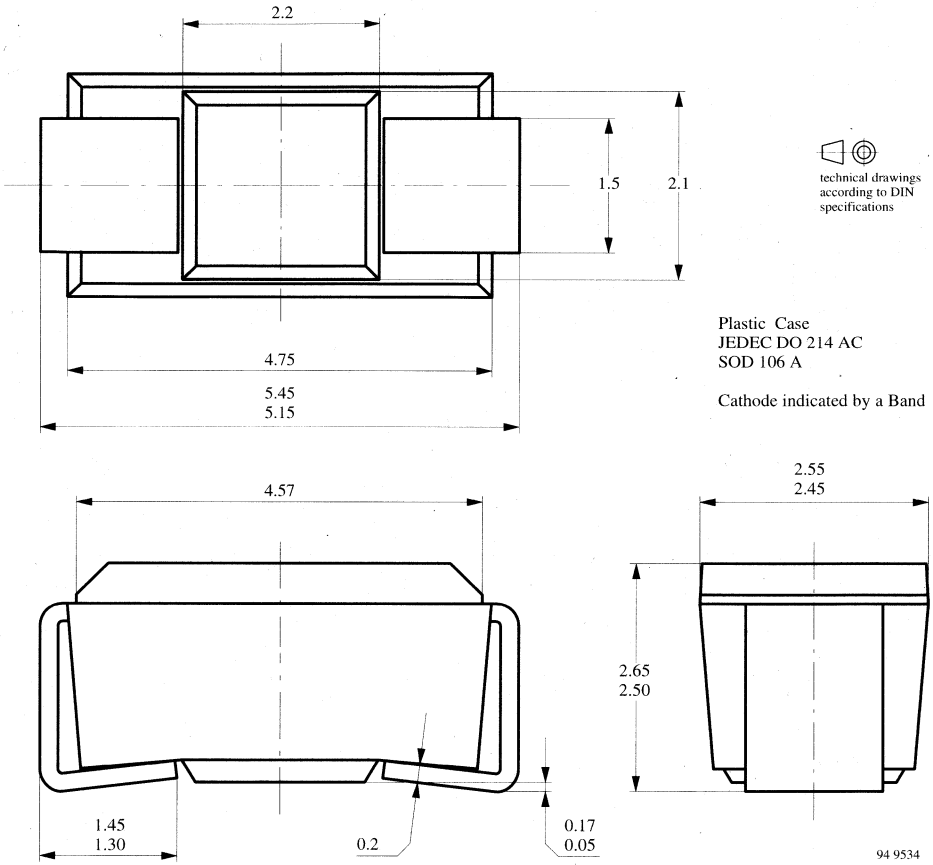

Silicon Z–Diodes

Features

- Glass passivated junction
- High reliability
- Voltage range 3.3V to 15V
- Fits onto 5 mm SMD footpads
- Wave and reflow solderable

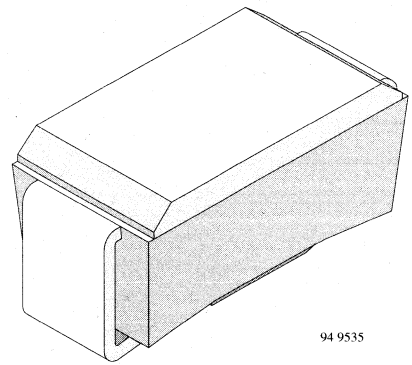

Applications

Voltage stabilization

Absolute Maximum Ratings

$T_j = 25°C$

Parameter	Test Conditions	Type	Symbol	Value	Unit
Power dissipation	R_{thJA}<30K/W, T_{amb}=60°C		P_V	3	W
	R_{thJA}<100K/W, T_{amb}=25°C		P_V	1.25	W
Non repetitive peak surge power dissipation	t_p=100µs sq.pulse, T_j=25°C prior to surge		P_{ZSM}	60	W
Junction temperature			T_j	150	°C
Storage temperature range			T_{stg}	–65...+150	°C

Maximum Thermal Resistance

$T_j = 25°C$

Parameter	Test Conditions	Symbol	Value	Unit
Junction lead		R_{thJL}	30	K/W
Junction ambient	mounted on epoxy–glass hard tissue, Fig. 1a	R_{thJA}	150	K/W
	mounted on epoxy–glass hard tissue, Fig. 1b	R_{thJA}	125	K/W
	mounted on Al–oxid–ceramic (Al_2O_3), Fig. 1b	R_{thJA}	100	K/W

Characteristics

$T_j = 25°C$

Parameter	Test Conditions	Type	Symbol	Min	Typ	Max	Unit
Forward voltage	I_F=0.2A		V_F			1.2	V

Type BZG05C...	V_z V		r_{zj} Ω	TK_{vz} %/K		at I_z mA	r_{zk} Ω	at I_{zk} mA	I_R µA	at V_R V
	Min.	Max.	Max.	Typ.	Max.		Max.		Max.	
3V3	3.1	3.5	25	–0.08	–0.05	80	500	1	40	1
3V6	3.4	3.8	25	–0.08	–0.05	60	500	1	20	1
3V9	3.7	4.1	20	–0.07	–0.02	60	500	1	10	1
4V3	4.0	4.6	15	–0.07	–0.01	50	500	1	3	1
4V7	4.4	5.0	15	–0.03	0.04	45	500	1	3	1
5V1	4.8	5.4	15	–0.01	0.04	45	500	1	1	1.5
5V6	5.2	6.0	10	0.00	0.05	45	400	1	1	2
6V2	5.8	6.6	5	0.01	0.06	35	300	1	1	3
6V8	6.4	7.2	4	0.02	0.06	35	300	1	1	4
7V5	7.0	7.9	3.5	0.02	0.07	35	200	0.5	1	4.5
8V2	7.7	8.7	6	0.03	0.07	25	200	0.5	1	6.2
9V1	8.5	9.6	6	0.04	0.08	25	200	0.5	1	6.8
10	9.4	10.6	8	0.04	0.08	25	200	0.5	0.5	7.5
11	10.4	11.6	10	0.05	0.08	20	300	0.5	0.5	8.2
12	11.4	12.7	10	0.05	0.09	20	350	0.5	0.5	9.1
13	12.4	14.1	12	0.05	0.09	20	400	0.5	0.5	10
15	13.8	15.6	20	0.06	0.09	15	500	0.5	0.5	11
16	15.3	17.1	20	0.06	0.09	15	500	0.5	0.5	12
18	16.8	19.1	25	0.06	0.09	15	500	0.5	0.5	13
20	18.8	21.2	30	0.06	0.09	10	600	0.5	0.5	15
22	20.8	23.3	30	0.06	0.095	10	600	0.5	0.5	16
24	22.8	25.6	30	0.06	0.095	10	600	0.5	0.5	18
27	25.1	28.9	35	0.06	0.095	8	750	0.25	0.5	20
30	28	32	35	0.06	0.095	8	1000	0.25	0.5	22
33	31	35	40	0.06	0.095	8	1000	0.25	0.5	24
36	34	38	45	0.06	0.095	8	1000	0.25	0.5	27

Typical Characteristics (T_j = 25°C unless otherwise specified)

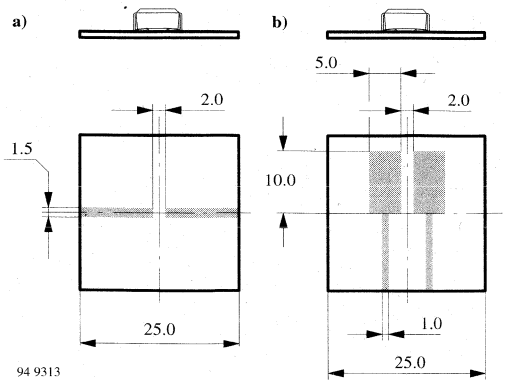

Figure 1. Boards for R_{thJA} definition (copper overlay 35µ)

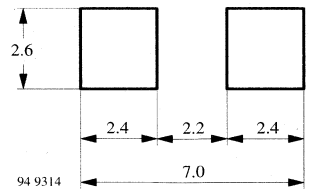

Figure 2. Recommended foot pads (in mm)

Dimensions in mm

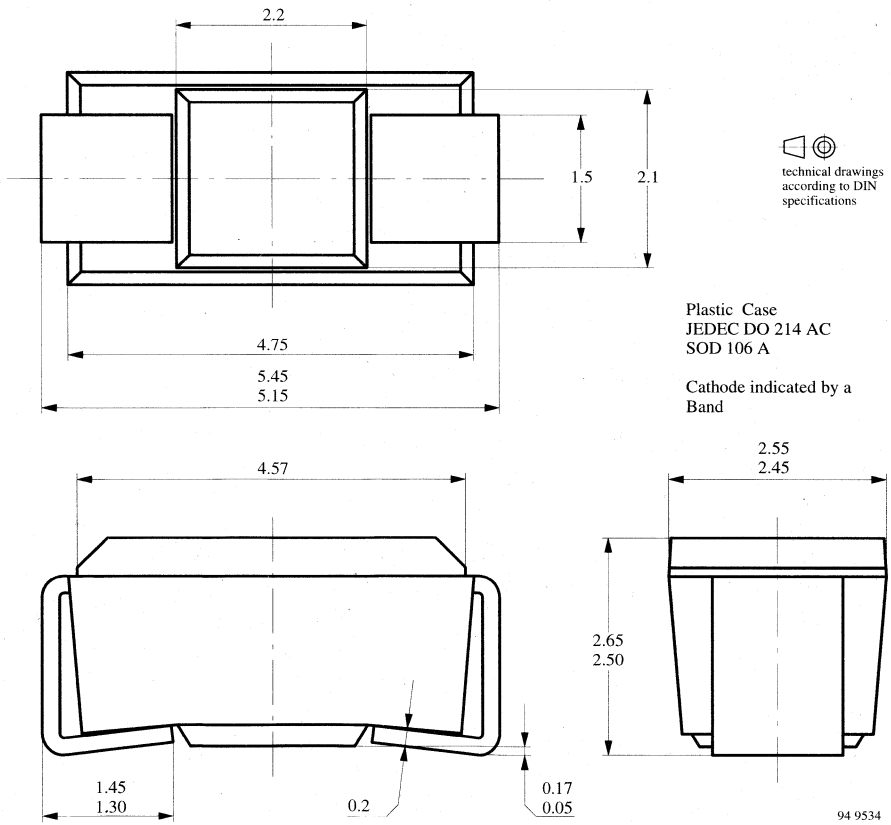

Silicon Epitaxial Planar Z–Diodes

Features

- Saving space
- Hermetic sealed parts
- Fits onto SOD 323 / SOT 23 footprints
- Electrical data identical with the devices BZT55B... / TZMB...
- Very sharp reverse characteristic
- Low reverse current level
- Very high stability
- Low noise
- Available with tighter tolerances
- V_Z–tolerance ± 2%

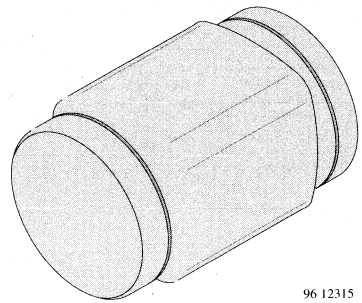

Applications

Voltage stabilization

Absolute Maximum Ratings

$T_j = 25°C$

Parameter	Test Conditions	Type	Symbol	Value	Unit
Power dissipation	$R_{thJA} \leqq 300K/W$		P_V	500	mW
Z–current			I_Z	P_V/V_Z	mA
Junction temperature			T_j	175	°C
Storage temperature range			T_{stg}	–65...+175	°C

Maximum Thermal Resistance

$T_j = 25°C$

Parameter	Test Conditions	Symbol	Value	Unit
Junction ambient	mounted on epoxy–glass hard issue, Fig. 1 35µm copper clad, 0.9 mm^2 copper area per electrode	R_{thJA}	500	K/W
Junction tie point		R_{thJL}	300	K/W

Characteristics

$T_j = 25°C$

Parameter	Test Conditions	Type	Symbol	Min	Typ	Max	Unit
Forward voltage	I_F=200mA		V_F			1.5	V

Type	V_{Znorm}	I_{ZT} for	V_{ZT} and	r_{zjT}	r_{zjk} at	I_{ZK}	I_R and	I_R 2) at	V_R	TK_{VZ}
TZMB...	V	mA	V	Ω	Ω	mA	µA	µA	V	%/K
2V4	2.4	5	2.35 to 2.45	< 85	< 600	1	< 100	< 50	1	–0.09 to –0.06
2V7	2.7	5	2.64 to 2.76	< 85	< 600	1	< 10	< 50	1	–0.09 to –0.06
3V0	3.0	5	2.94 to 3.06	< 90	< 600	1	< 4	< 40	1	–0.08 to –0.05
3V3	3.3	5	3.24 to 3.36	< 90	< 600	1	< 2	< 40	1	–0.08 to –0.05
3V6	3.6	5	3.52 to 3.68	< 90	< 600	1	< 2	< 40	1	–0.08 to –0.05
3V9	3.9	5	3.82 to 3.98	< 90	< 600	1	< 2	< 40	1	–0.08 to –0.05
4V3	4.3	5	4.22 to 4.38	< 90	< 600	1	< 1	< 20	1	–0.06 to –0.03
4V7	4.7	5	4.60 to 4.80	< 80	< 600	1	< 0.5	< 10	1	–0.05 to +0.02
5V1	5.1	5	5.00 to 5.20	< 60	< 550	1	< 0.1	< 2	1	–0.02 to +0.02
5V6	5.6	5	5.48 to 5.72	< 40	< 450	1	< 0.1	< 2	1	–0.05 to +0.05
6V2	6.2	5	6.08 to 6.32	< 10	< 200	1	< 0.1	< 2	2	0.03 to 0.06
6V8	6.8	5	6.66 to 6.94	< 8	< 150	1	< 0.1	< 2	3	0.03 to 0.07
7V5	7.5	5	7.35 to 7.65	< 7	< 50	1	< 0.1	< 2	5	0.03 to 0.07
8V2	8.2	5	8.04 to 8.36	< 7	< 50	1	< 0.1	< 2	6.2	0.03 to 0.08
9V1	9.1	5	8.92 to 9.28	< 10	< 50	1	< 0.1	< 2	6.8	0.03 to 0.09
10	10	5	9.80 to 10.20	< 15	< 70	1	< 0.1	< 2	7.5	0.03 to 0.1
11	11	5	10.78 to 11.22	< 20	< 70	1	< 0.1	< 2	8.2	0.03 to 0.11
12	12	5	11.76 to 12.24	< 20	< 90	1	< 0.1	< 2	9.1	0.03 to 0.11
13	13	5	12.74 to 13.26	< 26	< 110	1	< 0.1	< 2	10	0.03 to 0.11
15	15	5	14.70 to 15.30	< 30	< 110	1	< 0.1	< 2	11	0.03 to 0.11
16	16	5	15.70 to 16.30	< 40	< 170	1	< 0.1	< 2	12	0.03 to 0.11
18	18	5	17.64 to 18.36	< 50	< 170	1	< 0.1	< 2	13	0.03 to 0.11
20	20	5	19.60 to 20.40	< 55	< 220	1	< 0.1	< 2	15	0.03 to 0.11
22	22	5	21.55 to 22.45	< 55	< 220	1	< 0.1	< 2	16	0.04 to 0.12
24	24	5	23.5 to 24.5	< 80	< 220	1	< 0.1	< 2	18	0.04 to 0,12
27	27	5	26.4 to 27.6	< 80	< 220	1	< 0.1	< 2	20	0.04 to 0.12
30	30	5	29.4 to 30.6	< 80	< 220	1	< 0.1	< 2	22	0.04 to 0.12
33	33	5	32.4 to 33.6	< 80	< 220	1	< 0.1	< 2	24	0.04 to 0.12
36	36	5	35.3 to 36.7	< 80	< 220	1	< 0.1	< 2	27	0.04 to 0.12
39	39	2.5	38.2 to 39.8	< 90	< 500	1	< 0.1	< 5	30	0.04 to 0.12
43	43	2.5	42.1 to 43.9	< 90	< 600	0.5	< 0.1	< 5	33	0.04 to 0.12
47	47	2.5	46.1 to 47.9	< 110	< 700	0.5	< 0.1	< 5	36	0.04 to 0.12
51	51	2.5	50.0 to 52.0	< 125	< 700	0.5	< 0.1	< 10	39	0.04 to 0.12
56	56	2.5	54.9 to 57.1	< 135	< 1000	0.5	< 0.1	< 10	43	0.04 to 0.12
62	62	2.5	60.8 to 63.2	< 150	< 1000	0.5	< 0.1	< 10	47	0.04 to 0.12
68	68	2.5	66.6 to 69.4	< 200	< 1000	0.5	< 0.1	< 10	51	0.04 to 0.12
75	75	2.5	73.5 to 76.5	< 250	< 1500	0.5	< 0.1	< 10	56	0.04 to 0.12

Typical Characteristics (T_{amb} = 25°C, unless otherwise specified)

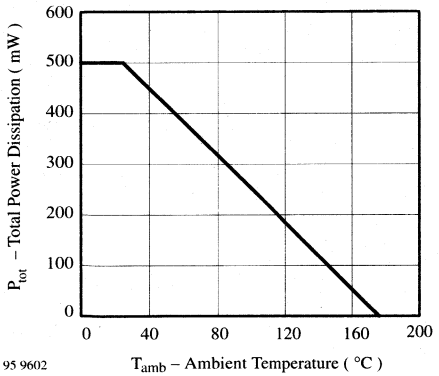

Figure 1 Total Power Dissipation vs. Ambient Temperature

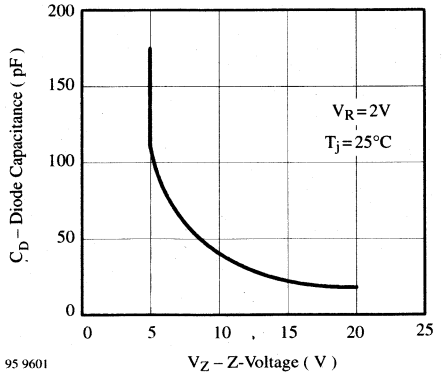

Figure 4 Diode Capacitance vs. Z–Voltage

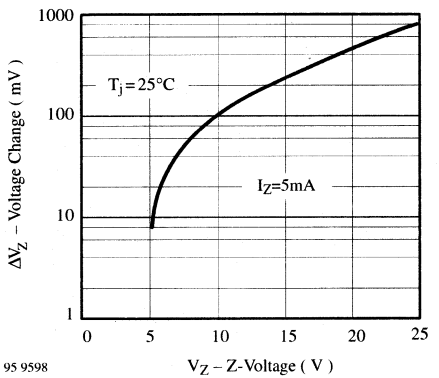

Figure 2 Typical Change of Working Voltage under Operating Conditions at T_{amb}=25°C

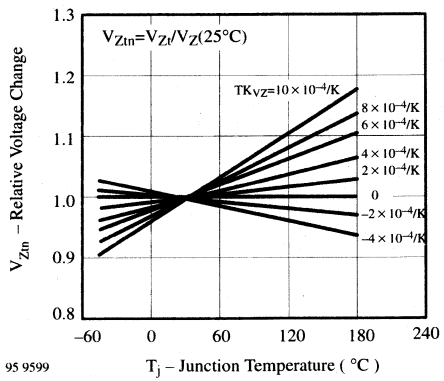

Figure 5 Typical Change of Working Voltage vs. Junction Temperature

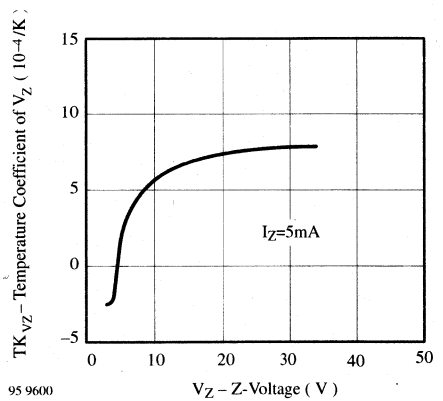

Figure 3 Temperature Coefficient of Vz vs. Z–Voltage

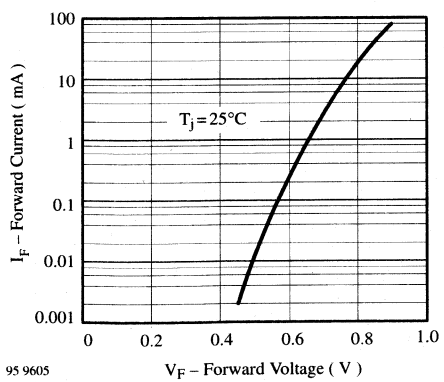

Figure 6 Forward Current vs. Forward Voltage

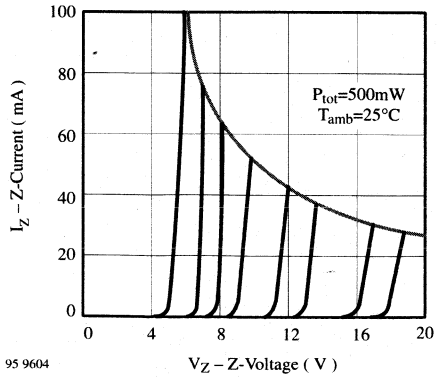

Figure 7. Z–Current vs. Z–Voltage

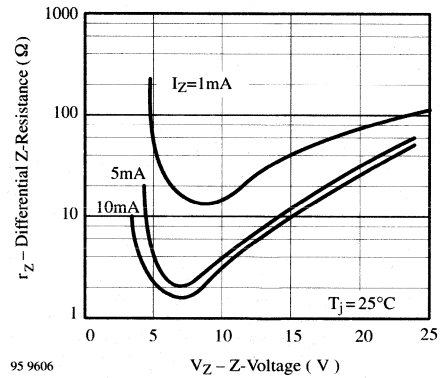

Figure 9. Differential Z–Resistance vs. Z–Voltage

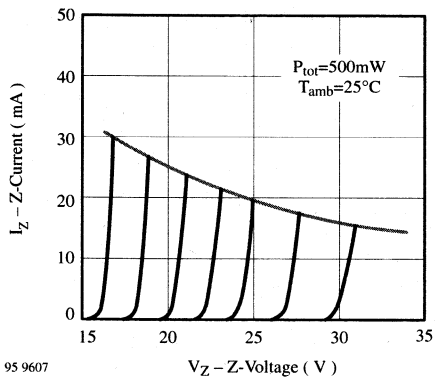

Figure 8. Z–Current vs. Z–Voltage

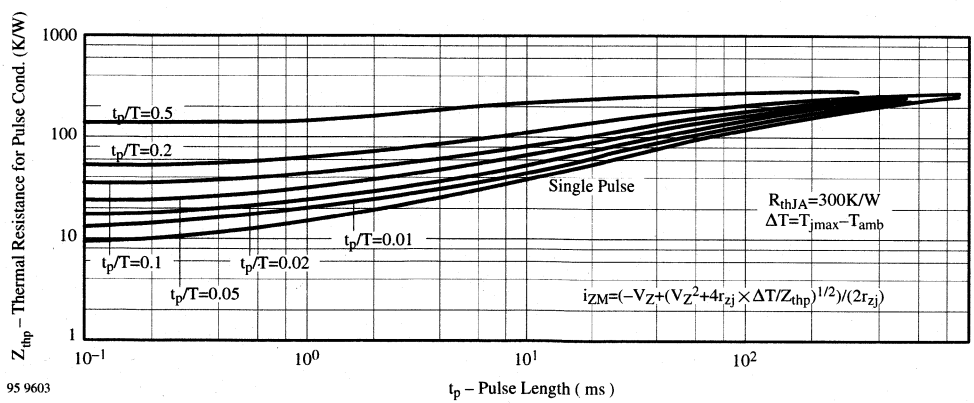

Figure 10. Thermal Response

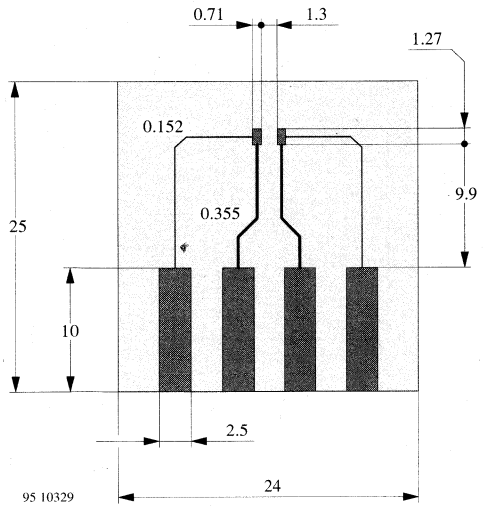

Figure 11. Board for R_{thJA} definition (in mm)

Reflow Soldering

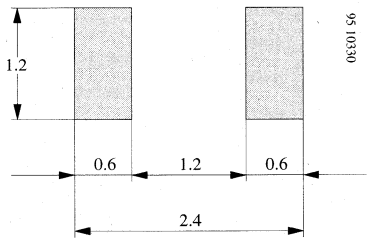

Figure 12. Recommended foot pads (in mm)

Wave Soldering

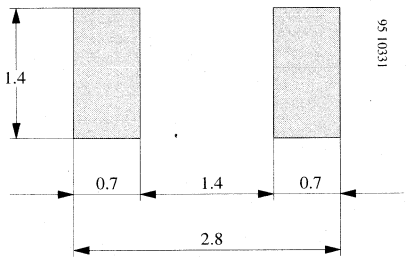

Figure 13. Recommended foot pads (in mm)

Dimensions in mm

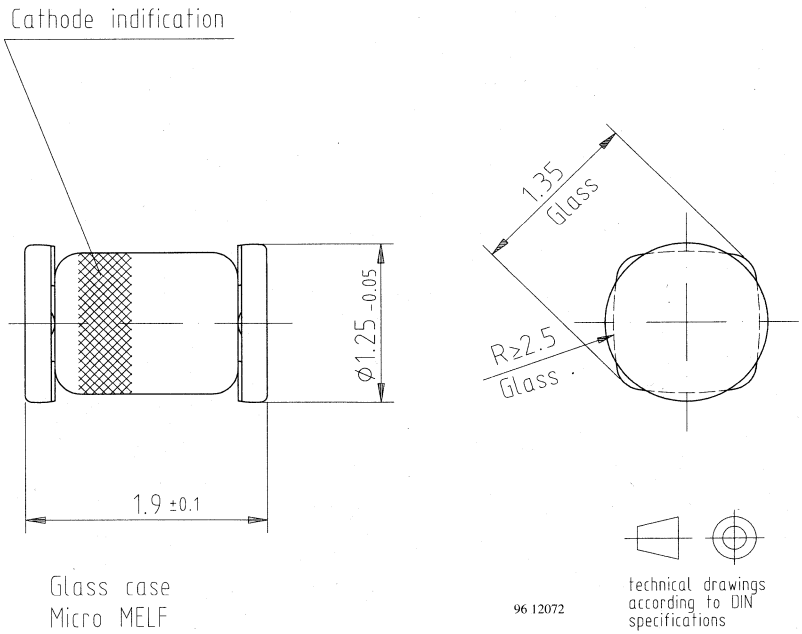

Silicon Epitaxial Planar Z–Diodes

Features

- Saving space
- Hermetic sealed parts
- Fits onto SOD 323 / SOT 23 footprints
- Electrical data identical with the devices BZT55C... / TZMC...
- Very sharp reverse characteristic
- Low reverse current level
- Very high stability
- Low noise
- Available with tighter tolerances

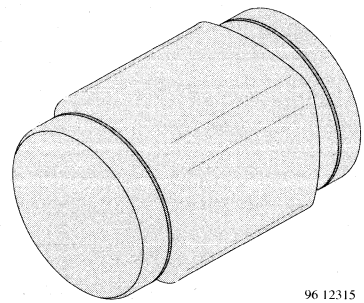

Applications

Voltage stabilization

Absolute Maximum Ratings

$T_j = 25°C$

Parameter	Test Conditions	Type	Symbol	Value	Unit
Power dissipation	$R_{thJA} \leqq 300K/W$		P_V	500	mW
Z–current			I_Z	P_V/V_Z	mA
Junction temperature			T_j	175	°C
Storage temperature range			T_{stg}	–65...+175	°C

Maximum Thermal Resistance

$T_j = 25°C$

Parameter	Test Conditions	Symbol	Value	Unit
Junction ambient	mounted on epoxy–glass hard tissue, Fig. 1 35µm copper clad, 0.9 mm^2 copper area per electrode	R_{thJA}	500	K/W
Junction tie point		R_{thJL}	300	K/W

Characteristics

$T_j = 25°C$

Parameter	Test Conditions	Type	Symbol	Min	Typ	Max	Unit
Forward voltage	I_F=200mA		V_F			1.5	V

Type	V_{Znorm}	I_{ZT} for V_{ZT} [1] and r_{zjT}			r_{zjk} at I_{ZK}		I_R and I_R [2] at V_R			TK_{VZ}
BZM55C...	V	mA	V	Ω	Ω	mA	µA	µA	V	%/K
2 V 4	2.4	5	2.28 to 2.56	< 85	< 600	1	< 100	< 50	1	–0.09 to –0.06
2 V 7	2.7	5	2.5 to 2.9	< 85	< 600	1	< 10	< 50	1	–0.09 to –0.06
3 V 0	3.0	5	2.8 to 3.2	< 90	< 600	1	< 4	< 40	1	–0.08 to –0.05
3 V 3	3.3	5	3.1 to 3.5	< 90	< 600	1	< 2	< 40	1	–0.08 to –0.05
3 V 6	3.6	5	3.4 to 3.8	< 90	< 600	1	< 2	< 40	1	–0.08 to –0.05
3 V 9	3.9	5	3.7 to 4.1	< 90	< 600	1	< 2	< 40	1	–0.08 to –0.05
4 V 3	4.3	5	4.0 to 4.6	< 90	< 600	1	< 1	< 20	1	–0.06 to –0.03
4 V 7	4.7	5	4.4 to 5.0	< 80	< 600	1	< 0.5	< 10	1	–0.05 to +0.02
5 V 1	5.1	5	4.8 to 5.4	< 60	< 550	1	< 0.1	< 2	1	–0.02 to +0.02
5 V 6	5.6	5	5.2 to 6.0	< 40	< 450	1	< 0.1	< 2	1	–0.05 to +0,05
6 V 2	6.2	5	5.8 to 6.6	< 10	< 200	1	< 0.1	< 2	2	0.03 to 0.06
6 V 8	6.8	5	6.4 to 7.2	< 8	< 150	1	< 0.1	< 2	3	0.03 to 0.07
7 V 5	7.5	5	7.0 to 7.9	< 7	< 50	1	< 0.1	< 2	5	0.03 to 0.07
8 V 2	8.2	5	7.7 to 8.7	< 7	< 50	1	< 0.1	< 2	6.2	0.03 to 0.08
9 V 1	9.1	5	8.5 to 9.6	< 10	< 50	1	< 0.1	< 2	6.8	0.03 to 0.09
10	10	5	9.4 to 10.6	< 15	< 70	1	< 0.1	< 2	7.5	0.03 to 0.1
11	11	5	10.4 to 11.6	< 20	< 70	1	< 0.1	< 2	8.2	0.03 to 0.11
12	12	5	11.4 to 12.7	< 20	< 90	1	< 0.1	< 2	9.1	0.03 to 0.11
13	13	5	12.4 to 14.1	< 26	< 110	1	< 0.1	< 2	10	0.03 to 0.11
15	15	5	13.8 to 15.6	< 30	< 110	1	< 0.1	< 2	11	0.03 to 0.11
16	16	5	15.3 to 17.1	< 40	< 170	1	< 0.1	< 2	12	0.03 to 0.11
18	18	5	16.8 to 19.1	< 50	< 170	1	< 0.1	< 2	13	0.03 to 0.11
20	20	5	18.8 to 21.2	< 55	< 220	1	< 0.1	< 2	15	0.03 to 0.11
22	22	5	20.8 to 23.3	< 55	< 220	1	< 0.1	< 2	16	0.04 to 0.12
24	24	5	22.8 to 25.6	< 80	< 220	1	< 0.1	< 2	18	0.04 to 0.12
27	27	5	25.1 to 28.9	< 80	< 220	1	< 0.1	< 2	20	0.04 to 0.12
30	30	5	28 to 32	< 80	< 220	1	< 0.1	< 2	22	0.04 to 0.12
33	33	5	31 to 35	< 80	< 220	1	< 0.1	< 2	24	0.04 to 0.12
36	36	5	34 to 38	< 80	< 220	1	< 0.1	< 2	27	0.04 to 0.12
39	39	2.5	37 to 41	< 90	< 500	1	< 0.1	< 5	30	0.04 to 0.12
43	43	2.5	40 to 46	< 90	< 600	0.5	< 0.1	< 5	33	0.04 to 0.12
47	47	2.5	44 to 50	< 110	< 700	0.5	< 0.1	< 5	36	0.04 to 0.12
51	51	2.5	48 to 54	< 125	< 700	0.5	< 0.1	< 10	39	0.04 to 0.12
56	56	2.5	52 to 60	< 135	< 1000	0.5	< 0.1	< 10	43	0.04 to 0.12
62	62	2.5	58 to 66	< 150	< 1000	0.5	< 0.1	< 10	47	0.04 to 0.12
68	68	2.5	64 to 72	< 200	< 1000	0.5	< 0.1	< 10	51	0.04 to 0.12
75	75	2.5	70 to 79	< 250	< 1500	0.5	< 0.1	< 10	56	0.04 to 0.12

[1] $t_p/T \leq 100$ ms, tighter tolerances available on request. [2] at $T_j = 150°C$

Typical Characteristics (T_j = 25°C unless otherwise specified)

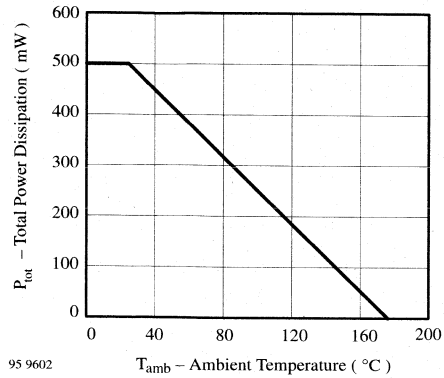

Figure 1. Total Power Dissipation vs. Ambient Temperature

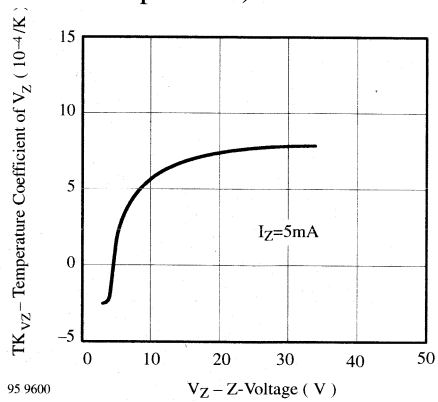

Figure 4. Temperature Coefficient of Vz vs. Z–Voltage

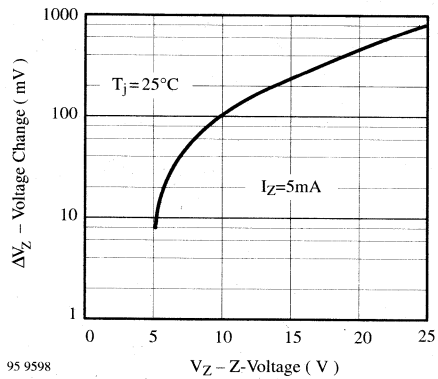

Figure 2. Typical Change of Working Voltage under Operating Conditions at T_{amb}=25°C

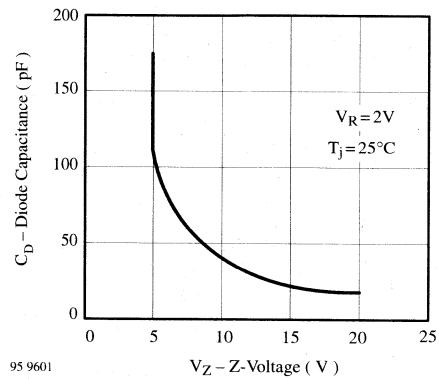

Figure 5. Diode Capacitance vs. Z–Voltage

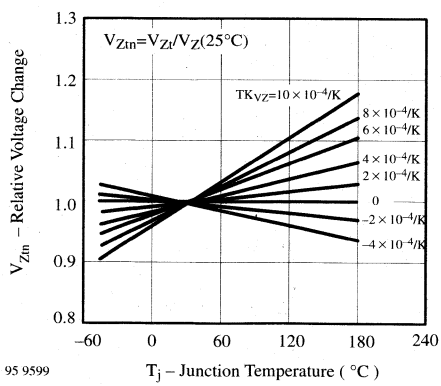

Figure 3. Typical Change of Working Voltage vs. Junction Temperature

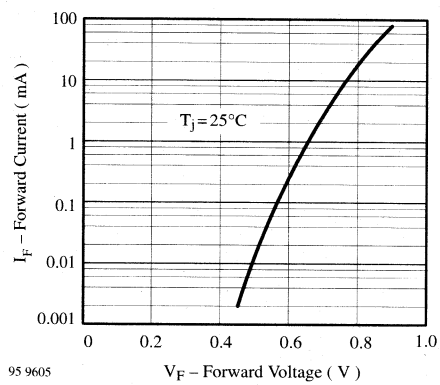

Figure 6. Forward Current vs. Forward Voltage

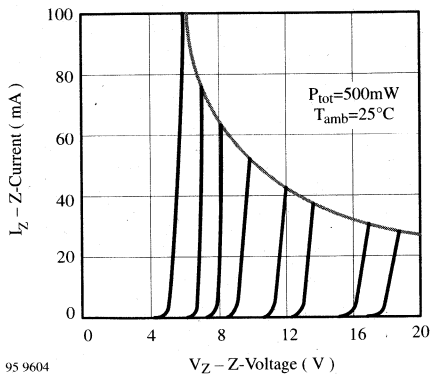

Figure 7. Z–Current vs. Z–Voltage

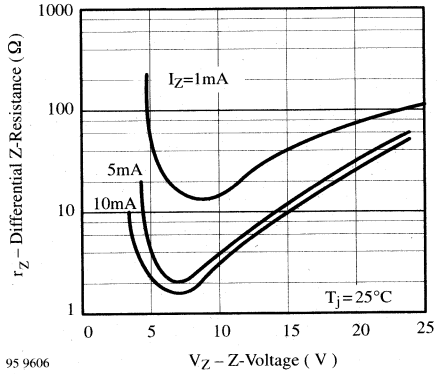

Figure 9. Differential Z–Resistance vs. Z–Voltage

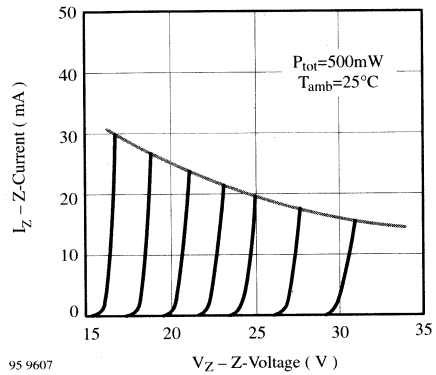

Figure 8. Z–Current vs. Z–Voltage

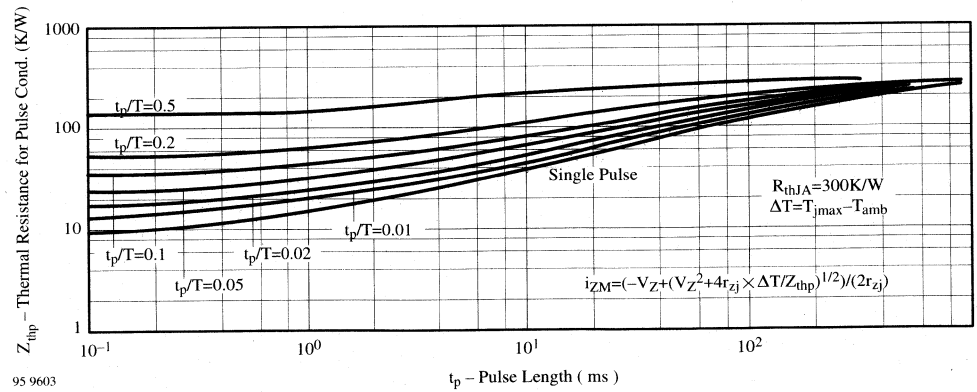

Figure 10. Thermal Response

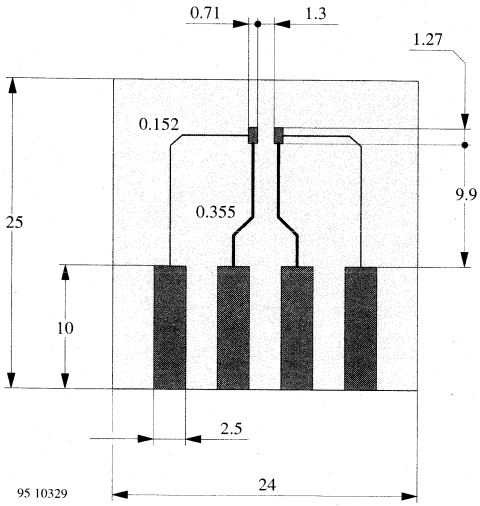

Figure 11. Board for R_{thJA} definition (in mm)

Reflow Soldering

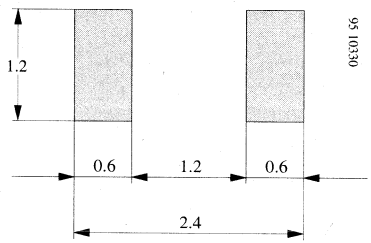

Figure 12. Recommended foot pads (in mm)

Wave Soldering

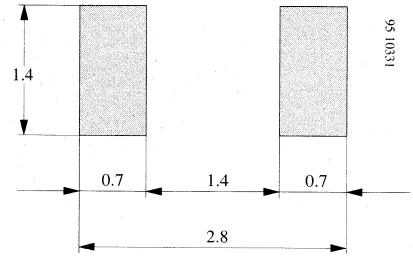

Figure 13. Recommended foot pads (in mm)

Dimensions in mm

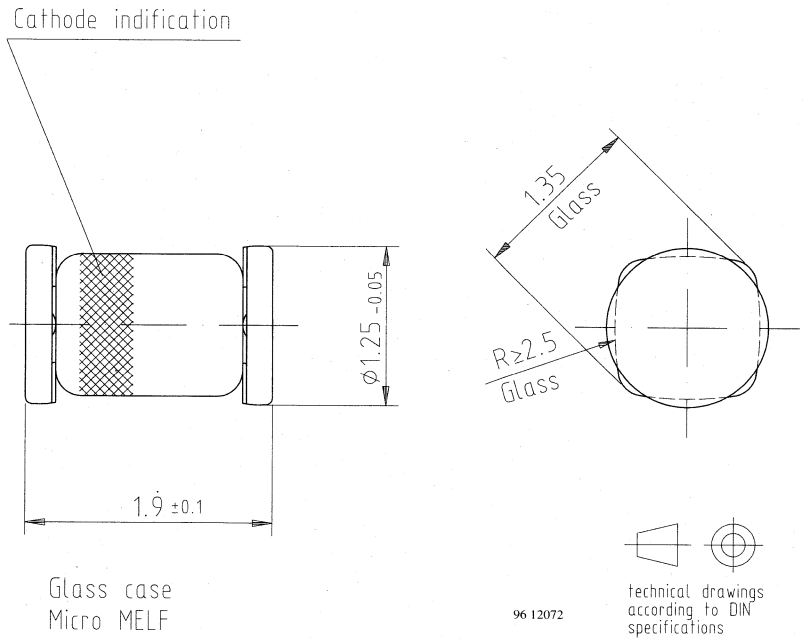

Silicon Z–Diodes and Transient Voltage Suppressors

Features

- Glass passivated junction
- Hermetically sealed package
- Clamping time in picoseconds

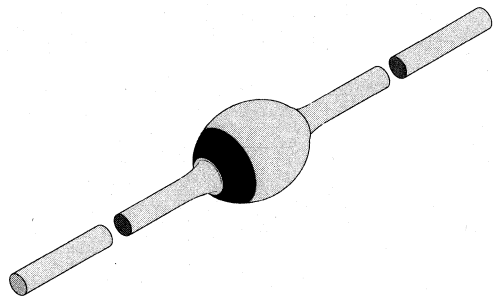

94 9539

Applications

Medium power voltage regulators and medium power transient suppression circuits

Absolute Maximum Ratings

$T_j = 25°C$

Parameter	Test Conditions	Type	Symbol	Value	Unit
Power dissipation	l=10mm, T_L=25°C		P_V	3.25	W
Power dissipation	T_{amb}=25°C		P_V	1.3	W
Repetitive peak reverse power dissipation			P_{ZRM}	10	W
Non repetitive peak surge power dissipation	t_p=100µs, T_j=25°C		P_{ZSM}	600	W
Junction temperature			T_j	175	°C
Storage temperature range			T_{stg}	–65...+175	°C

Maximum Thermal Resistance

$T_j = 25°C$

Parameter	Test Conditions	Symbol	Value	Unit
Junction ambient	l=10mm, T_L=constant	R_{thJA}	46	K/W
Junction ambient	on PC board with spacing 25mm	R_{thJA}	100	K/W

Characteristics

$T_j = 25°C$

Parameter	Test Conditions	Type	Symbol	Min	Typ	Max	Unit
Forward voltage	I_F=0.5A		V_F			1.2	V

Characteristics when used as voltage regulator diodes, T_j = 25°C

Type BZT03C...	V_Z V			r_{zj} and TK_{VZ} at I_Z Ω %/K mA					I_R at V_R µA	
	Min.	Typ.	Max.	Typ.	Max.	Min.	Max.		Max.	
6V2	5.8	6.2	6.6	1	2	0	0.07	100	1500	4.7
6V8	6.4	6.8	7.2	1	2	0	0.07	100	1000	5.1
7V5	7.0	7.5	7.9	1	2	0	0.07	100	750	5.6
8V2	7.7	8.2	8.7	1	2	0.03	0.08	100	600	6.2
9V1	8.5	9.1	9.6	2	4	0.03	0.08	50	20	6.8
10	9.4	10	10.6	2	4	0.05	0.09	50	10	7.5
11	10.4	10	11.6	4	7	0.05	0.10	50	4	8.2
12	11.4	12	12.7	4	7	0.05	0.10	50	3	9.1
13	12.4	13	14.1	5	10	0.05	0.10	50	2	10
15	13.8	15	15.6	5	10	0.05	0.10	50	1	11
16	15.3	16	17.1	6	15	0.06	0.11	25	1	12
18	16.8	18	19.1	6	15	0.06	0.11	25	1	13
20	18.8	20	21.2	6	15	0.06	0.11	25	1	15
22	20.8	22	23.3	6	15	0.06	0.11	25	1	16
24	22.8	24	25.6	7	15	0.06	0.11	25	1	18
27	25.1	27	28.9	7	15	0.06	0.11	25	1	20
30	28	30	32	8	15	0.06	0.11	25	1	22
33	31	33	35	8	15	0.06	0.11	25	1	24
36	34	36	38	21	40	0.06	0.11	10	1	27
39	37	39	41	21	40	0.06	0.11	10	1	30
43	40	43	46	24	45	0.07	0.12	10	1	33
47	44	47	50	24	45	0.07	0.12	10	1	36
51	48	51	54	25	60	0.07	0.12	10	1	39
56	52	56	60	25	60	0.07	0.12	10	1	43
62	58	62	66	25	80	0.08	0.13	10	1	47
68	64	68	72	25	80	0.08	0.13	10	1	51
75	70	75	79	30	100	0.08	0.13	10	1	56
82	77	82	87	30	100	0.08	0.13	10	1	62
91	85	91	96	60	200	0.09	0.13	5	1	68
100	94	100	106	60	200	0.09	0.13	5	1	75
110	104	110	116	80	250	0.09	0.13	5	1	82
120	114	120	127	80	250	0.09	0.13	5	1	91
130	124	130	141	110	300	0.09	0.13	5	1	100
150	138	150	156	130	300	0.09	0.13	5	1	110
160	153	160	171	150	350	0.09	0.13	5	1	120
180	168	180	191	180	400	0.09	0.13	5	1	130
200	188	200	212	200	500	0.09	0.13	5	1	150
220	208	220	233	350	750	0.09	0.13	2	1	160

Type BZT03C...	V_Z V			r_{zj} and TK_{VZ} at I_Z Ω %/K mA					I_R at V_R µA	
	Min.	Typ.	Max.	Typ.	Max.	Min.	Max.		Max.	
240	228	240	256	400	850	0.09	0.13	2	1	180
270	251	270	289	450	1000	0.09	0.13	2	1	200

Characteristics when used as transient suppressor diodes, T_j = 25°C

Type BZT03C...	Clamping $V_{(CL)R}$ 1) at I_{RSM} V A		Stand-off I_R at V_R 2) µA V	
	Max.		Max.	
6V2	9.3	34.0	3000	5.1
6V8	10.2	31.0	2000	5.6
7V5	11.3	26.5	1500	6.2
8V2	12.3	24.4	1200	6.8
9V1	13.3	22.7	50	7.5
10	14.8	20.3	20	8.2
11	15.7	19.1	5	9.1
12	17.0	17.7	5	10
13	18.9	15.9	5	11
15	20.9	14.4	5	12
16	22.9	13.1	5	13
18	25.6	11.7	5	15
20	28.4	10.6	5	16
22	31.0	9.7	5	18
24	33.8	8.9	5	20
27	38.1	7.9	5	22
30	42.2	7.1	5	24
33	46.2	6.5	5	27
36	50.1	6.0	5	30
39	54.1	5.5	5	33
43	60.7	4.9	5	36
47	65.5	4.6	5	39
51	70.8	4.2	5	43
56	78.6	3.8	5	47
62	86.5	3.5	5	51
68	94.4	3.2	5	56
75	103.5	2.9	5	62
82	114	2.6	5	68
91	126	2.4	5	75
100	139	2.2	5	82
110	152	2.0	5	91
120	167	1.8	5	100

Type BZT03C...	Clamping $V_{(CL)R}$ [1] at I_{RSM} V	A	Stand-off I_R at V_R [2] µA	V
	Max.		Max.	
130	185	1.6	5	110
150	204	1.5	5	120
160	224	1.3	5	130
180	249	1.2	5	150
200	276	1.1	5	160
220	305	1.0	5	180
240	336	0.9	5	200
270	380	0.8	5	220

[1] 10/1000 exp. falling pulse t_p = 1000 µs down to 50%

Typical Characteristics (T_j = 25°C unless otherwise specified)

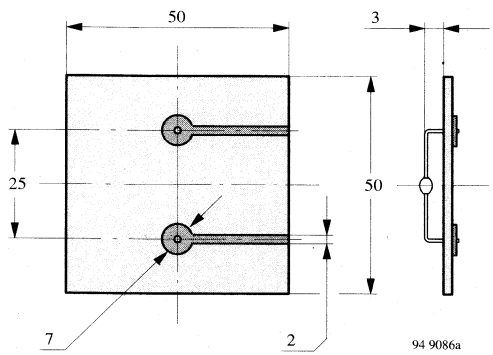

Figure 1. Epoxy glass hard tissue, board thickness 1.5 mm, $R_{thJA} \leqq 100$ K/W

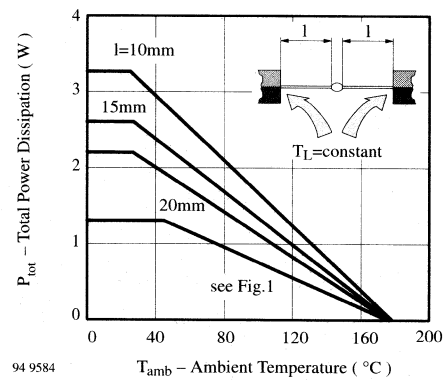

Figure 2. Total Power Dissipation vs. Ambient Temperature

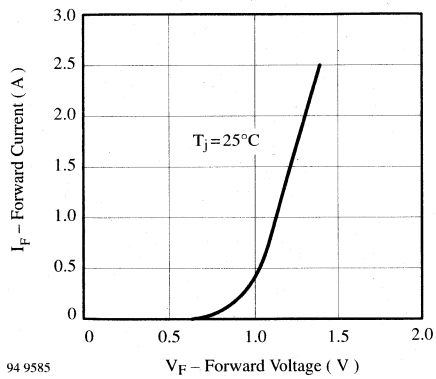

Figure 3. Forward Current vs. Forward Voltage

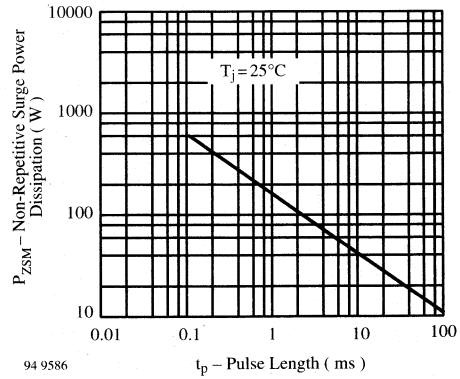

Figure 4. Non Repetitive Surge Power Dissipation vs. Pulse Length

Dimensions in mm

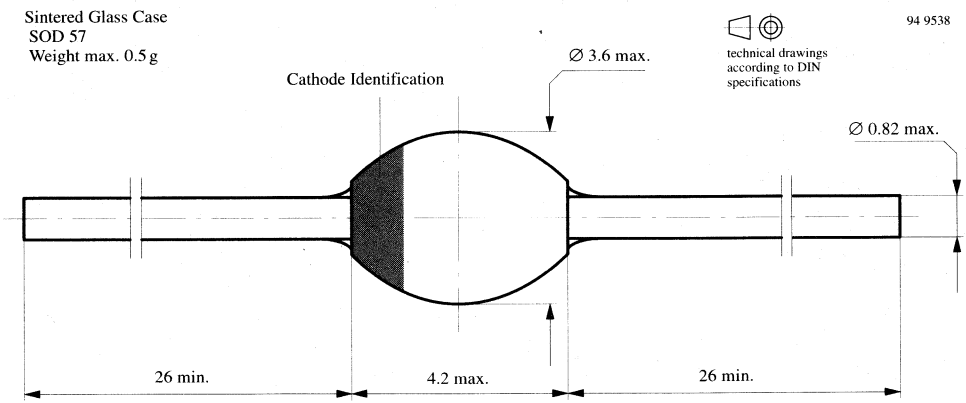

Silicon Z–Diodes and Transient Voltage Suppressors

Features

- Glass passivated junction
- Hermetically sealed package
- Clamping time in picoseconds

Applications

Medium power voltage regulators and medium power transient suppression circuits

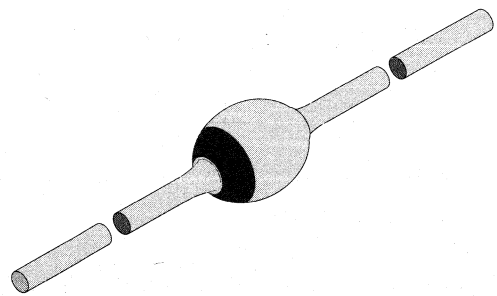

94 9539

Absolute Maximum Ratings

$T_j = 25°C$

Parameter	Test Conditions	Type	Symbol	Value	Unit
Power dissipation	l=10mm, T_L=25°C		P_V	3.25	W
Power dissipation	T_{amb}=25°C		P_V	1.3	W
Repetitive peak reverse power dissipation			P_{ZRM}	10	W
Non repetitive peak surge power dissipation	t_p=100µs, T_j=25°C		P_{ZSM}	600	W
Junction temperature			T_j	175	°C
Storage temperature range			T_{stg}	–65...+175	°C

Maximum Thermal Resistance

$T_j = 25°C$

Parameter	Test Conditions	Symbol	Value	Unit
Junction ambient	l=10mm, T_L=constant	R_{thJA}	46	K/W
Junction ambient	on PC board with spacing 25mm	R_{thJA}	100	K/W

Characteristics

$T_j = 25°C$

Parameter	Test Conditions	Type	Symbol	Min	Typ	Max	Unit
Forward voltage	I_F=0.5A		V_F			1.2	V

Characteristics when used as voltage regulator diodes, T_j = 25°C

Type	V_Z			r_{zj} and TK_{UZ} at I_Z					I_R at V_R	
BZT03D...	V			Ω		%/K		mA	µA	
	Min.	Typ.	Max.	Typ.	Max.	Min.	Max.		Max.	
6V2	5.6	6.2	6.8	1	2	0	0.07	100	1500	4.4
6V8	6.1	6.8	7.5	1	2	0	0.07	100	1000	4.8
7V5	6.75	7.5	8.25	1	2	0	0.07	100	750	5.3
8V2	7.4	8.2	9.0	1	2	0.03	0.08	100	600	5.9
9V1	8.2	9.1	10.0	2	4	0.03	0.08	50	20	6.5
10	9.0	10	11.0	2	4	0.05	0.09	50	10	7.1
11	9.9	11	12.1	4	7	0.05	0.10	50	4	7.9
12	10.8	12	13.2	4	7	0.05	0.10	50	3	8.6
13	11.7	13	14.3	5	10	0.05	0.10	50	2	9.3
15	13.5	15	16.5	5	10	0.05	0.10	50	1	10.6
16	14.4	16	17.6	6	15	0.06	0.11	25	1	11.6
18	16.2	18	19.8	6	15	0.06	0.11	25	1	12.6
20	18.0	20	22.0	6	15	0.06	0.11	25	1	14.4
22	29.8	22	24.2	6	15	0.06	0.11	25	1	15.8
24	21.6	24	26.4	7	15	0.06	0.11	25	1	17.2
27	24.3	27	29.7	7	15	0.06	0.11	25	1	19.4
30	27	30	33	8	15	0.06	0.11	25	1	21.5
33	29.7	33	36.3	8	15	0.06	0.11	25	1	23.5
36	32.4	36	39.6	21	40	0.06	0.11	10	1	25.8
39	35.1	39	42.9	21	40	0.06	0.11	10	1	28
43	38.7	43	47.3	24	45	0.07	0.12	10	1	31
47	42.3	47	51.7	24	45	0.07	0.12	10	1	33.5
51	45.9	51	56.1	25	60	0.07	0.12	10	1	36.5
56	50.4	56	61.6	25	60	0.07	0.12	10	1	40
62	55.8	62	68.2	25	80	0.08	0.13	10	1	44.5
68	61.2	68	74.8	25	80	0.08	0.13	10	1	49
75	67.5	75	82.5	30	100	0.08	0.13	10	1	54
82	73.8	82	90.2	30	100	0.08	0.13	10	1	59
91	81.9	91	100	60	200	0.09	0.13	5	1	65
100	90	100	110	60	200	0.09	0.13	5	1	71
110	99	110	121	80	250	0.09	0.13	5	1	79
120	108	120	132	80	250	0.09	0.13	5	1	86
130	117	130	143	110	300	0.09	0.13	5	1	93
150	135	150	165	130	300	0.09	0.13	5	1	106
160	144	160	176	150	350	0.09	0.13	5	1	116
180	162	180	198	180	400	0.09	0.13	5	1	126
200	180	200	220	200	500	0.09	0.13	5	1	144
220	198	220	242	350	750	0.09	0.13	2	1	158

Type BZT03D...	V_Z V			r_{zj} and TK_{UZ} at I_Z Ω %/K mA					I_R at V_R µA	
	Min.	Typ.	Max.	Typ.	Max.	Min.	Max.		Max.	
240	216	240	264	400	850	0.09	0.13	2	1	172
270	243	270	297	450	1000	0.09	0.13	2	1	194

Characteristics when used as transient suppressor diodes, T_j = 25°C

Type BZT03D...	Clamping $V_{(CL)R}$ [1] at I_{RSM} V A		Stand-off I_R at V_R [2] µA V	
	Max.		Max.	
6V2	9.5	34.0	3000	4.8
6V8	10.5	31.0	2000	5.3
7V5	11.6	26.5	1500	5.9
8V2	12.6	24.4	1200	6.5
9V1	13.7	22.7	50	7.1
10	15.2	20.3	20	7.9
11	16.2	19.1	5	8.6
12	17.5	17.7	5	9.3
13	19.1	15.9	5	10.6
15	21.8	14.4	5	11.6
16	23.4	13.1	5	12.6
18	26.3	11.7	5	14.4
20	29.2	10.6	5	15.8
22	31.9	9.7	5	17.2
24	34.6	8.9	5	19.4
27	39	7.9	5	21.5
30	43.5	7.1	5	23.5
33	47.5	6.5	5	25.8
36	51.5	6.0	5	28
39	56	5.5	5	31
43	62	4.9	5	33.5
47	67.5	4.6	5	36.5
51	73	4.2	5	40
56	81	3.8	5	44.5
62	89	3.5	5	49
68	97	3.2	5	54
75	107	2.9	5	59
82	117	2.6	5	65
91	130	2.4	5	71
100	143	2.2	5	79
110	157	2.0	5	86
120	172	1.8	5	93

Type BZT03D...	Clamping $V_{(CL)R}$ [1] at I_{RSM} V	A	Stand-off I_R at V_R [2] µA	V
	Max.		Max.	
130	187	1.6	5	106
150	213	1.5	5	116
160	229	1.3	5	126
180	256	1.2	5	144
200	284	1.1	5	158
220	314	1.0	5	172
240	364	0.9	5	194
270	388	0.8	5	215

[1] 10/1000 exp. falling pulse t_p = 1000 µs down to 50% [2] Stand-off voltage = recommended supply voltage

Typical Characteristics (T_j = 25°C unless otherwise specified)

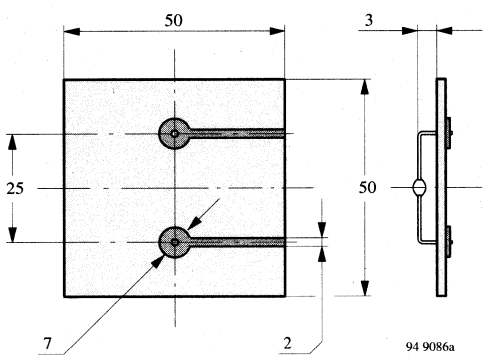

Figure 1. Epoxy glass hard tissue, board thickness 1.5 mm, $R_{thJA} \leqq 100$ K/W

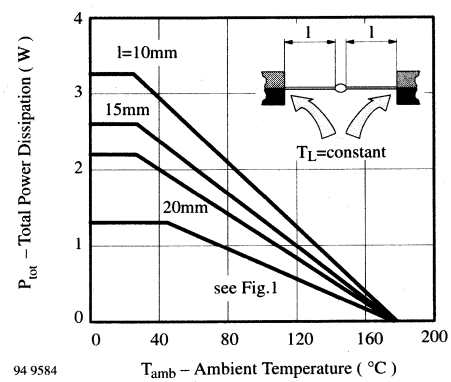

Figure 2. Total Power Dissipation vs. Ambient Temperature

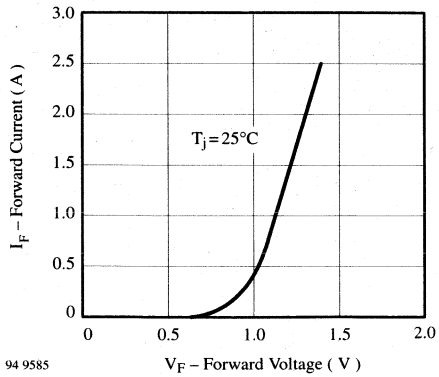

Figure 3. Forward Current vs. Forward Voltage

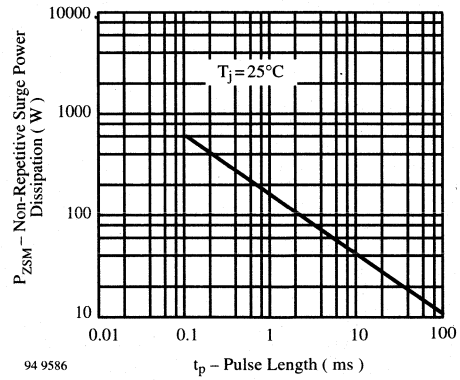

Figure 4. Non Repetitive Surge Power Dissipation vs. Pulse Length

Dimensions in mm

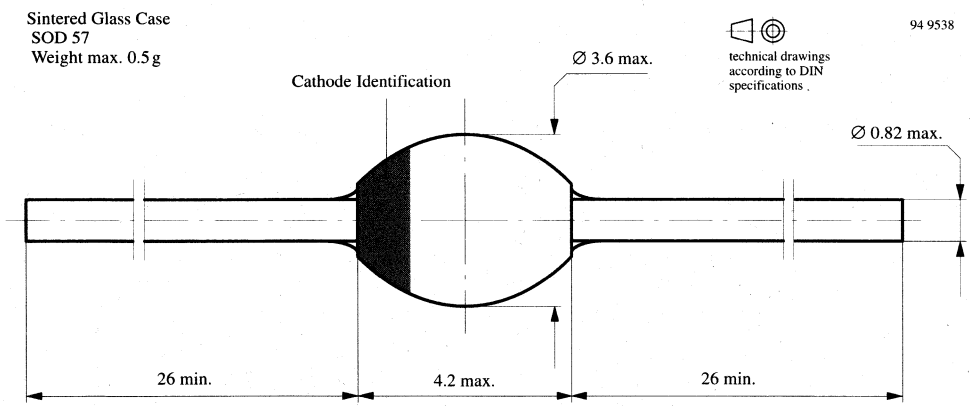

Silicon Epitaxial Planar Z–Diodes

Features

- Very sharp reverse characteristic
- Low reverse current level
- Very high stability
- Low noise
- Available with tighter tolerances

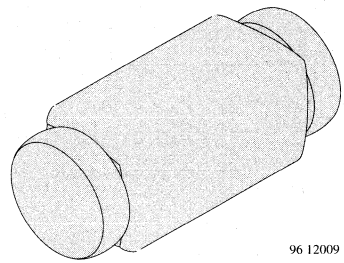

Applications

Voltage stabilization

Absolute Maximum Ratings

$T_j = 25°C$

Parameter	Test Conditions	Type	Symbol	Value	Unit
Power dissipation	$R_{thJA} \leqq 300K/W$		P_V	500	mW
Z–current			I_Z	P_V/V_Z	mA
Junction temperature			T_j	175	°C
Storage temperature range			T_{stg}	–65...+175	°C

Maximum Thermal Resistance

$T_j = 25°C$

Parameter	Test Conditions	Symbol	Value	Unit
Junction ambient	on PC board 50mmx50mmx1.6mm	R_{thJA}	500	K/W

Characteristics

$T_j = 25°C$

Parameter	Test Conditions	Type	Symbol	Min	Typ	Max	Unit
Forward voltage	I_F=200mA		V_F			1.5	V

Type	V_{Znom}	I_{ZT} for V_{ZT} [1] and r_{zjT}			r_{zjk} at I_{ZK}		I_R and I_R [2] at V_R			TK_{VZ}
BZT55C...	V	mA	V	Ω	Ω	mA	µA	µA	V	%/K
2 V 4	2.4	5	2.28 to 2.56	< 85	< 600	1	< 50	< 100	1	–0.09 to –0.06
2 V 7	2.7	5	2.5 to 2.9	< 85	< 600	1	< 10	< 50	1	–0.09 to –0.06
3 V 0	3.0	5	2.8 to 3.2	< 90	< 600	1	< 4	< 40	1	–0.08 to –0.05
3 V 3	3.3	5	3.1 to 3.5	< 90	< 600	1	< 2	< 40	1	–0.08 to –0.05
3 V 6	3.6	5	3.4 to 3.8	< 90	< 600	1	< 2	< 40	1	–0.08 to –0.05
3 V 9	3.9	5	3.7 to 4.1	< 90	< 600	1	< 2	< 40	1	–0.08 to –0.05
4 V 3	4.3	5	4.0 to 4.6	< 90	< 600	1	< 1	< 20	1	–0.06 to –0.03
4 V 7	4.7	5	4.4 to 5.0	< 80	< 600	1	< 0.5	< 10	1	–0.05 to +0.02
5 V 1	5.1	5	4.8 to 5.4	< 60	< 550	1	< 0.1	< 2	1	–0.02 to +0.02
5 V 6	5.6	5	5.2 to 6.0	< 40	< 450	1	< 0.1	< 2	1	–0.05 to +0,05
6 V 2	6.2	5	5.8 to 6.6	< 10	< 200	1	< 0.1	< 2	2	0.03 to 0.06
6 V 8	6.8	5	6.4 to 7.2	< 8	< 150	1	< 0.1	< 2	3	0.03 to 0.07
7 V 5	7.5	5	7.0 to 7.9	< 7	< 50	1	< 0.1	< 2	5	0.03 to 0.07
8 V 2	8.2	5	7.7 to 8.7	< 7	< 50	1	< 0.1	< 2	6.2	0.03 to 0.08
9 V 1	9.1	5	8.5 to 9.6	< 10	< 50	1	< 0.1	< 2	6.8	0.03 to 0.09
10	10	5	9.4 to 10.6	< 15	< 70	1	< 0.1	< 2	7.5	0.03 to 0.1
11	11	5	10.4 to 11.6	< 20	< 70	1	< 0.1	< 2	8.2	0.03 to 0.11
12	12	5	11.4 to 12.7	< 20	< 90	1	< 0.1	< 2	9.1	0.03 to 0.11
13	13	5	12.4 to 14.1	< 26	< 110	1	< 0.1	< 2	10	0.03 to 0.11
15	15	5	13.8 to 15.6	< 30	< 110	1	< 0.1	< 2	11	0.03 to 0.11
16	16	5	15.3 to 17.1	< 40	< 170	1	< 0.1	< 2	12	0.03 to 0.11
18	18	5	16.8 to 19.1	< 50	< 170	1	< 0.1	< 2	13	0.03 to 0.11
20	20	5	18.8 to 21.2	< 55	< 220	1	< 0.1	< 2	15	0.03 to 0.11
22	22	5	20.8 to 23.3	< 55	< 220	1	< 0.1	< 2	16	0.04 to 0.12
24	24	5	22.8 to 25.6	< 80	< 220	1	< 0.1	< 2	18	0.04 to 0.12
27	27	5	25.1 to 28.9	< 80	< 220	1	< 0.1	< 2	20	0.04 to 0.12
30	30	5	28 to 32	< 80	< 220	1	< 0.1	< 2	22	0.04 to 0.12
33	33	5	31 to 35	< 80	< 220	1	< 0.1	< 2	24	0.04 to 0.12
36	36	5	34 to 38	< 80	< 220	1	< 0.1	< 2	27	0.04 to 0.12
39	39	2.5	37 to 41	< 90	< 500	0.5	< 0.1	< 5	30	0.04 to 0.12
43	43	2.5	40 to 46	< 90	< 600	0.5	< 0.1	< 5	33	0.04 to 0.12
47	47	2.5	44 to 50	< 110	< 700	0.5	< 0.1	< 5	36	0.04 to 0.12
51	51	2.5	48 to 54	< 125	< 700	0.5	< 0.1	< 10	39	0.04 to 0.12
56	56	2.5	52 to 60	< 135	< 1000	0.5	< 0.1	< 10	43	0.04 to 0.12
62	62	2.5	58 to 66	< 150	< 1000	0.5	< 0.1	< 10	47	0.04 to 0.12
68	68	2.5	64 to 72	< 200	< 1000	0.5	< 0.1	< 10	51	0.04 to 0.12
75	75	2.5	70 to 79	< 250	< 1500	0.5	< 0.1	< 10	56	0.04 to 0.12

1) $t_p/T \leq 100$ ms,
2) at $T_j = 150°C$

tighter tolerances available on request:
BZT55A... ± 1% of V_{Znom}
BZT55B... ± 2% of V_{Znom}
BZT55F... ± 3% of V_{Znom}

Typical Characteristics (T_j = 25°C unless otherwise specified)

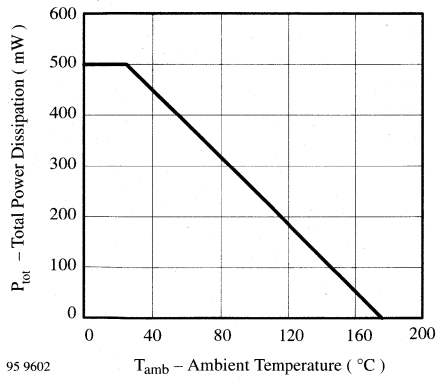

Figure 1. Total Power Dissipation vs. Ambient Temperature

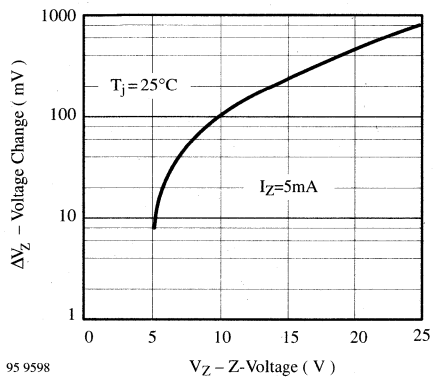

Figure 2. Typical Change of Working Voltage under Operating Conditions at T_{amb}=25°C

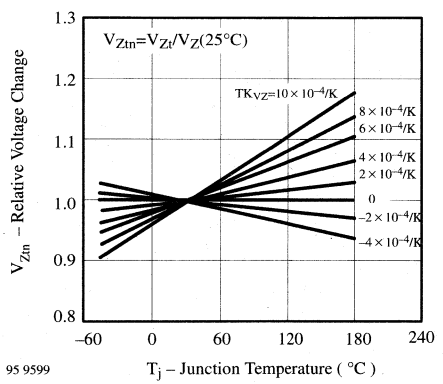

Figure 3. Typical Change of Working Voltage vs. Junction Temperature

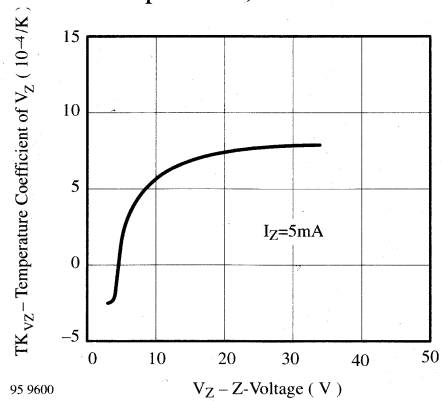

Figure 4. Temperature Coefficient of Vz vs. Z–Voltage

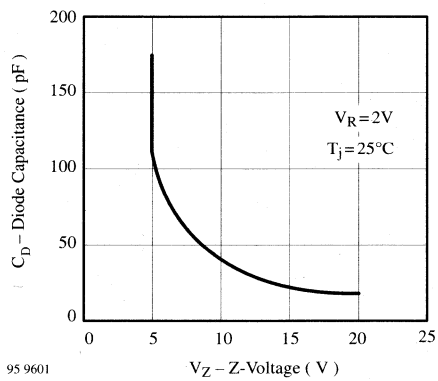

Figure 5. Diode Capacitance vs. Z–Voltage

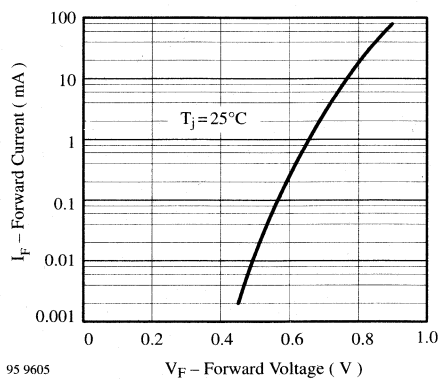

Figure 6. Forward Current vs. Forward Voltage

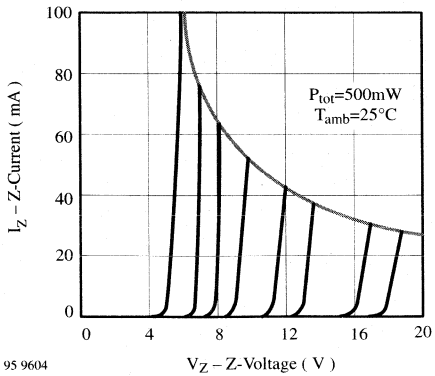

Figure 7. Z–Current vs. Z–Voltage

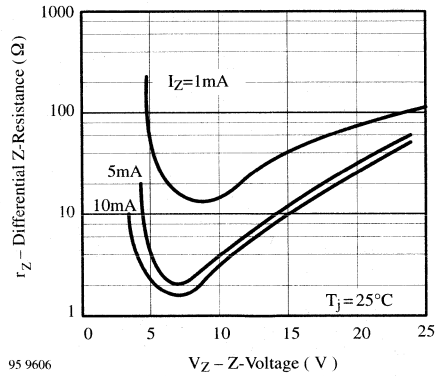

Figure 9. Differential Z–Resistance vs. Z–Voltage

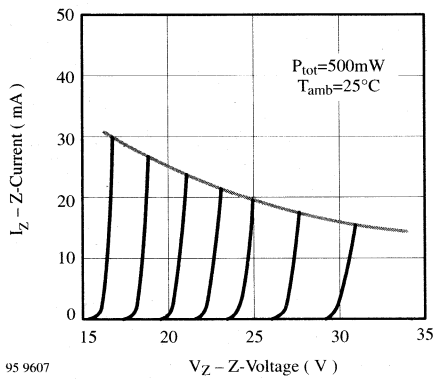

Figure 8. Z–Current vs. Z–Voltage

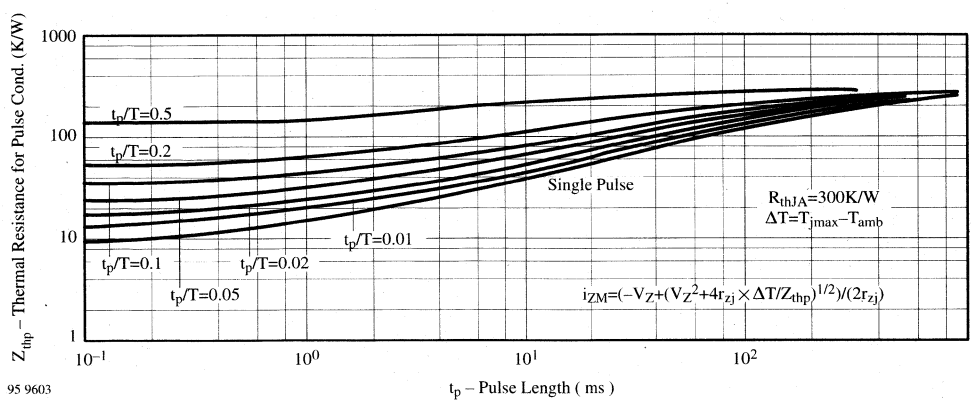

Figure 10. Thermal Response

Dimensions in mm

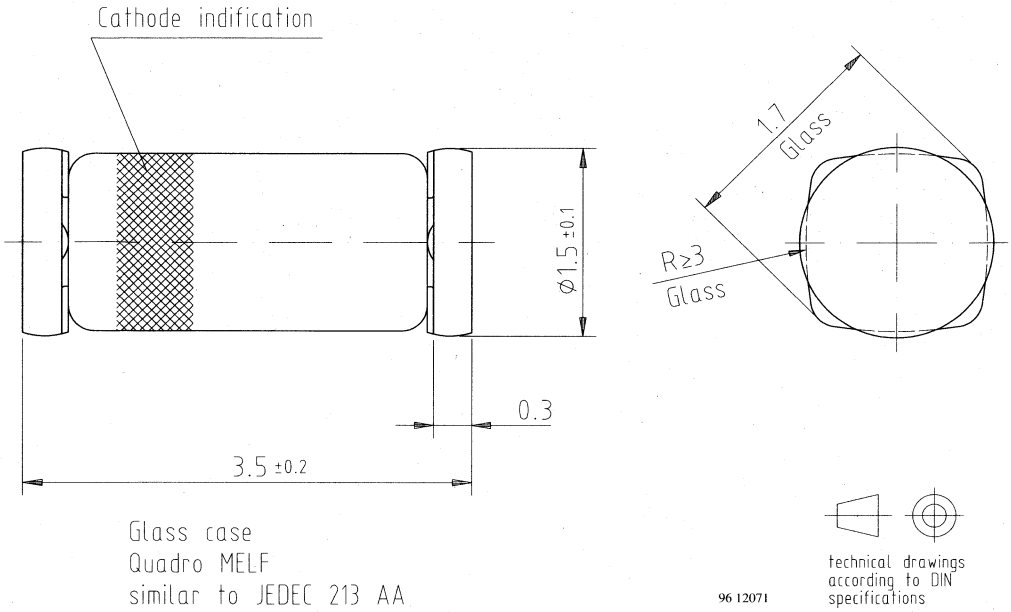

Silicon Z–Diodes and Transient Voltage Suppressors

Features

- Glass passivated junction
- Hermetically sealed package
- Clamping time in picoseconds

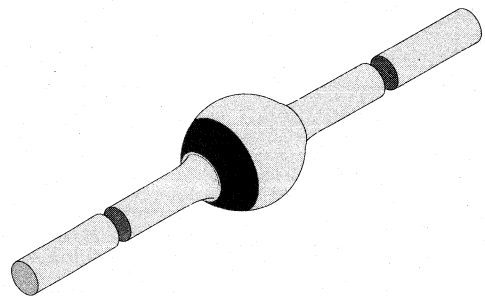

94 9588

Applications

Voltage regulators and transient suppression circuits

Absolute Maximum Ratings

$T_j = 25°C$

Parameter	Test Conditions	Type	Symbol	Value	Unit
Power dissipation	l=10mm, T_L=25°C		P_V	6.0	W
	T_{amb}=45°C		P_V	1.85	W
Repetitive peak reverse power dissipation			P_{ZRM}	20	W
Non repetitive peak surge power dissipation	t_p=100µs, T_j=25°C		P_{ZSM}	1000	W
Junction temperature			T_j	175	°C
Storage temperature range			T_{stg}	–65...+175	°C

Maximum Thermal Resistance

$T_j = 25°C$

Parameter	Test Conditions	Symbol	Value	Unit
Junction ambient	l=25mm, T_L=constant	R_{thJA}	30	K/W
	on PC board with spacing 37.5mm	R_{thJA}	70	K/W

Characteristics

$T_j = 25°C$

Parameter	Test Conditions	Type	Symbol	Min	Typ	Max	Unit
Forward voltage	I_F=1A		V_F			1.2	V

Characteristics when used as voltage regulator diodes, T_j = 25°C

Type BZW03C...	V_Z, V			r_{zj} and TK_{VZ} at i_Z					I_R at V_R	
				Ω		%/K		mA	µA	V
	Min.	Typ.	Max.	Typ.	Max.	Min.	Max.		Max.	
7V5	7.0	7.5	7.9	0.7	1.5	0	0.07	175	1500	5.6
8V2	7.0	8.2	8.7	0.8	1.5	0.03	0.08	150	1200	6.2
9V1	8.5	9.1	9.6	0.9	2.0	0.03	0.08	150	10	6.8
10	9.4	10.0	10.6	1.0	2.0	0.05	0.09	125	20	7.5
11	10.4	11.0	11.6	1.1	2.5	0.05	0.10	125	15	8.2
12	11.4	12.0	12.7	1.1	2.5	0.05	0.10	100	10	9.1
13	12.4	13.0	14.1	1.2	2.5	0.05	0.10	100	4	10
15	13.8	15.0	15.6	1.2	2.5	0.05	0.10	75	2	11
16	15.3	16.0	17.1	1.3	2.5	0.06	0.11	75	2	12
18	16.8	18.0	19.1	1.3	2.5	0.06	0.11	65	2	13
20	18.8	20.0	21.2	1.5	3.0	0.06	0.11	65	2	15
22	20.8	22.0	23.3	1.6	3.5	0.06	0.11	50	2	16
24	22.8	24.0	25.6	1.8	3.5	0.06	0.11	50	2	18
27	25.1	27.0	28.9	2.5	5.0	0.06	0.11	50	2	20
30	28	30	32	4	8	0.06	0.11	40	2	22
33	31	33	35	5	10	0.06	0.11	40	2	24
36	34	36	38	6	11	0.06	0.11	30	2	27
39	37	39	41	7	14	0.06	0.11	30	2	30
43	40	43	46	10	20	0.07	0.12	30	2	33
47	44	47	50	12	25	0.07	0.12	25	2	36
51	48	51	54	14	27	0.07	0.12	25	2	39
56	52	56	60	18	35	0.07	0.12	20	2	43
62	58	62	66	20	42	0.08	0.13	20	2	47
68	64	68	72	22	44	0.08	0.13	20	2	51
75	70	75	79	25	45	0.08	0.13	20	2	56
82	77	82	87	30	65	0.08	0.13	15	2	62
91	85	91	96	40	75	0.09	0.13	15	2	68
100	94	100	106	45	90	0.09	0.13	12	2	75
110	104	110	116	65	125	0.09	0.13	12	2	82
120	114	120	127	90	170	0.09	0.13	10	2	91
130	124	130	141	100	190	0.09	0.13	10	2	100
150	138	150	156	150	330	0.09	0.13	8	2	110
160	153	160	171	180	350	0.09	0.13	8	2	120
180	168	180	191	210	430	0.09	0.13	5	2	130
200	188	200	212	250	500	0.09	0.13	5	2	150
220	208	220	233	350	700	0.09	0.13	5	2	160
240	228	240	256	450	900	0.09	0.13	5	2	180
270	251	270	289	600	1200	0.09	0.13	5	2	200

Characteristics when used as transient suppressor diodes, T_j = 25°C

Type BZW03C...	I_R [1] µA	at V_R V	$V_{(BR)}$ [2] V	$I_{(BR)S}$ A
7V5	3000	6.2	11.3	44.2
8V2	2400	6.8	12.3	40.6
9V1	100	7.5	13.3	37.6
10	40	8.2	14.8	34.0
11	30	9.1	15.7	31.8
12	20	10	17.0	29.4
13	10	11	18.9	26.4
15	10	12	20.9	23.9
16	10	13	22.9	21.8
18	10	15	25.6	19.5
20	10	16	28.4	17.6
22	10	18	31.0	16.1
24	10	20	33.8	14.8
27	10	22	38.1	13.1
30	10	24	42.2	11.8
33	10	27	46.2	10.8
36	10	30	50.1	10.0
39	10	33	54.1	9.2
43	10	36	60.7	8.2

Type BZW03C...	I_R [1] µA	at V_R V	$V_{(BR)}$ [2] V	$I_{(BR)S}$ A
47	10	39	65.5	7.6
51	10	43	70.8	7.0
56	10	47	78.6	6.3
62	10	51	86.5	5.8
68	10	56	94.4	5.3
75	10	62	103.5	4.8
82	10	68	114	4.3
91	10	75	126	3.9
100	10	82	139	3.6
110	10	91	152	3.3
120	10	100	167	3.0
130	10	110	185	2.7
150	10	120	204	2.4
160	10	130	224	2.2
180	10	150	249	2.0
200	10	160	276	1.8
220	10	180	305	1.6
240	10	200	336	1.5
270	10	220	380	1.3

1) Stand-off reverse voltage = recommended supply voltage

2) exp. falling pulse, t_p = 500 µs down to 37%

Typical Characteristics (T_j = 25°C unless otherwise specified)

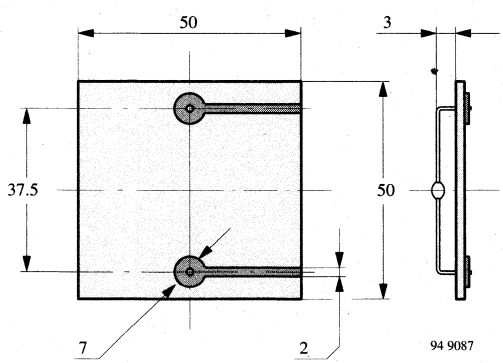

Figure 1. Epoxy glass hard tissue, board thickness 1.5 mm, $R_{thJA} \leqq 70$ K/W

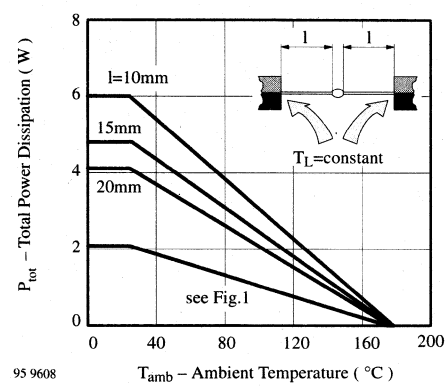

Figure 2. Total Power Dissipation vs. Ambient Temperature

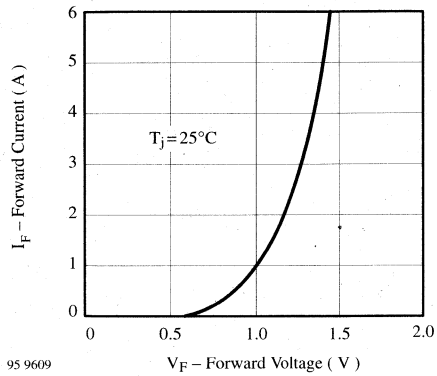

Figure 3. Forward Current vs. Forward Voltage

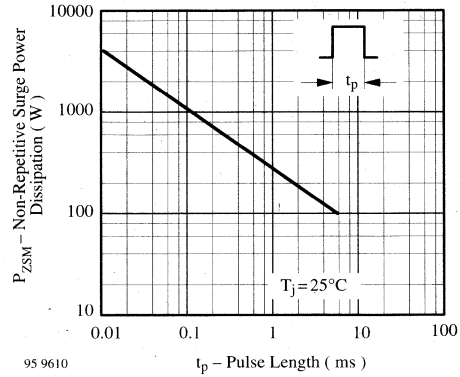

Figure 4. Non Repetitive Surge Power Dissipation vs. Pulse Length

Dimensions in mm

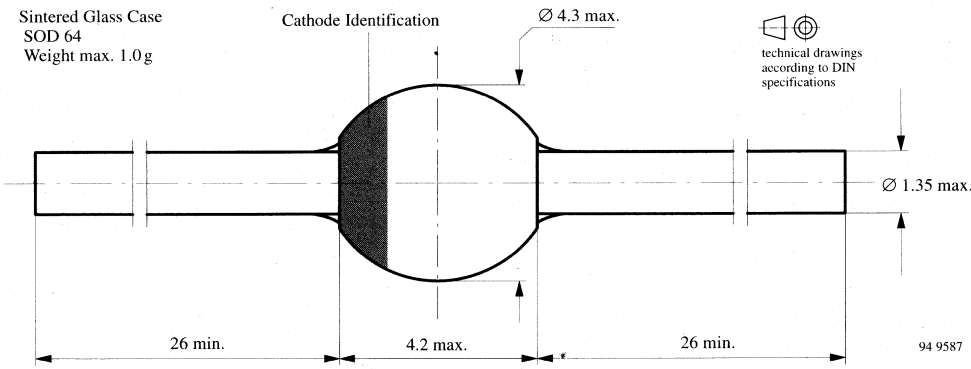

Silicon Z–Diodes and Transient Voltage Suppressors

Features

- Glass passivated junction
- Hermetically sealed package
- Clamping sealed package

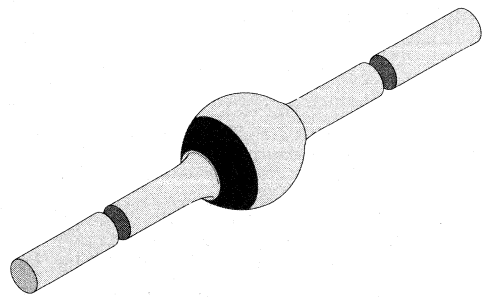

94 9588

Applications

Voltage regulators and transient suppression circuits

Absolute Maximum Ratings

$T_j = 25°C$

Parameter	Test Conditions	Type	Symbol	Value	Unit
Power dissipation	l=10mm, T_L=25°C		P_V	6.0	W
Power dissipation	T_{amb}=45°C		P_V	1.85	W
Repetitive peak reverse power dissipation			P_{ZRM}	20	W
Non repetitive peak surge power dissipation	t_p=100µs, T_j=25°C		P_{ZSM}	1000	W
Junction temperature			T_j	175	°C
Storage temperature range			T_{stg}	–65...+175	°C

Maximum Thermal Resistance

$T_j = 25°C$

Parameter	Test Conditions	Symbol	Value	Unit
Junction ambient	l=25mm, T_L=constant	R_{thJA}	30	K/W
Junction ambient	on PC board with spacing 37.5mm	R_{thJA}	70	K/W

Characteristics

$T_j = 25°C$

Parameter	Test Conditions	Type	Symbol	Min	Typ	Max	Unit
Forward voltage	I_F=1A		V_F			1.2	V

Characteristics when used as voltage regulator diodes, T_j = 25°C

Type	V_Z ±10%	r_{zj} and TK_{VZ} at I_Z					I_R at V_R	
	V	Ω		%/K		mA	µA	V
BZW03D...	Typ.	Typ.	Max.	Min.	Max.		Max.	
7V5	7.5	0.7	1.5	0	0.07	175	1500	5.3
8V2	8.2	0.8	1.5	0.03	0.08	150	1200	5.8
9V1	9.1	0.9	2.0	0.03	0.08	150	40	6.5
10	10.0	1.0	2.0	0.05	0.09	125	20	7.1
11	11.0	1.1	2.5	0.05	0.10	125	15	7.9
12	12.0	1.1	2.5	0.05	0.10	100	10	8.6
13	13.0	1.2	2.5	0.05	0.10	100	4	9.3
15	15.0	1.2	2.5	0.05	0.10	75	2	10.6
16	16.0	1.3	2.5	0.06	0.11	75	2	11.6
18	18.0	1.3	2.5	0.06	0.11	65	2	12.6
20	20.0	1.5	3.0	0.06	0.11	65	2	14.4
22	22.0	1.6	3.5	0.06	0.11	50	2	15.8
24	24.0	1.8	3.5	0.06	0.11	50	2	17.2
27	27.0	2.5	5.0	0.06	0.11	50	2	19.4
30	30	4	8	0.06	0.11	40	2	21.5
33	33	5	10	0.06	0.11	40	2	23.5
36	36	6	11	0.06	0.11	30	2	25.8
39	39	7	14	0.06	0.11	30	2	28
43	43	10	20	0.07	0.12	30	2	31
47	47	12	25	0.07	0.12	25	2	33.5
51	51	14	27	0.07	0.12	25	2	36.5
56	56	18	35	0.07	0.12	20	2	40
62	62	20	42	0.08	0.13	20	2	44.5
68	68	22	44	0.08	0.13	20	2	49
75	75	25	45	0.08	0.13	20	2	54
82	82	30	65	0.08	0.13	15	2	59
91	91	40	75	0.09	0.13	15	2	65
100	100	45	90	0.09	0.13	12	2	71
110	110	65	125	0.09	0.13	12	2	79
120	120	90	170	0.09	0.13	10	2	86
130	130	100	190	0.09	0.13	10	2	93
150	150	150	330	0.09	0.13	8	2	106
160	160	180	350	0.09	0.13	8	2	116
180	180	210	430	0.09	0.13	5	2	126
200	200	250	500	0.09	0.13	5	2	144
220	220	350	700	0.09	0.13	5	2	158
240	240	450	900	0.09	0.13	5	2	172
270	270	600	1200	0.09	0.13	5	2	194

Characteristics when used as transient suppressor diodes, T_j = 25°C

Type	I_R 1) at V_R		$V_{(BR)}$ 2)	$I_{(BR)S}$
BZW03D...	µA	V	V	A
7V5	3000	5.8	11.7	44.2
8V2	2400	6.5	12.6	40.6
9V1	100	7.1	13.6	37.6
10	40	7.9	15.2	34.0
11	30	8.6	16.2	31.8
12	20	9.3	17.5	29.4
13	10	10.6	19.1	26.4
15	10	11.6	21.8	23.9
16	10	12.6	23.4	21.8
18	10	14.4	26.3	19.5
20	10	15.8	29.2	17.6
22	10	17.2	32	16.1
24	10	19.4	34.6	14.8
27	10	21.5	39	13.1
30	10	23.5	43.2	11.8
33	10	25.8	47	10.8
36	10	28	51,7	10.0
39	10	31	56	9.2
43	10	33.5	62	8.2

Type	I_R 1) at V_R		$V_{(BR)}$ 2)	$I_{(BR)S}$
BZW03D...	µA	V	V	A
47	10	36.5	66.7	7.6
51	10	40	73	7.0
56	10	44.5	80.2	6.3
62	10	49	88.7	5.8
68	10	54	97.2	5.3
75	10	59	107	4.8
82	10	65	117	4.3
91	10	71	130	3.9
100	10	79	143	3.6
110	10	86	157	3.3
120	10	93	172	3.0
130	10	106	187	2.7
150	10	116	213	2.4
160	10	126	229	2.2
180	10	144	256	2.0
200	10	158	284	1.8
220	10	172	314	1.6
240	10	194	344	1.5
270	10	215	388	1.3

1) Stand-off reverse voltage = recommended supply voltage

2) Exp. falling pulse t_p = 500µs down to 37%

Typical Characteristics (T_j = 25°C unless otherwise specified)

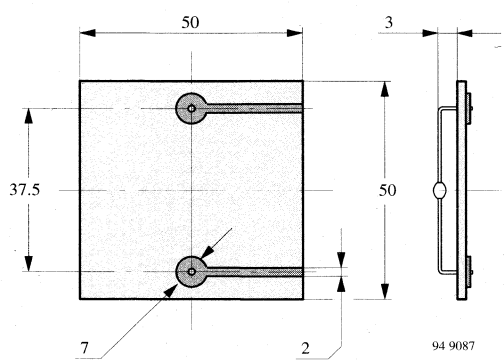

Figure 1. Epoxy glass hard tissue, board thickness 1.5 mm, $R_{thJA} \leqq 70$ K/W

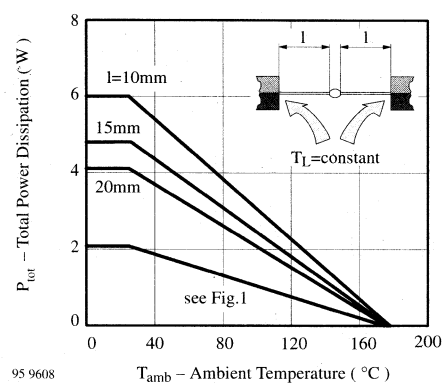

Figure 2. Total Power Dissipation vs. Ambient Temperature

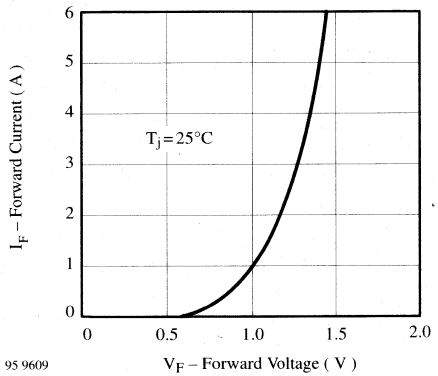

Figure 3. Forward Current vs. Forward Voltage

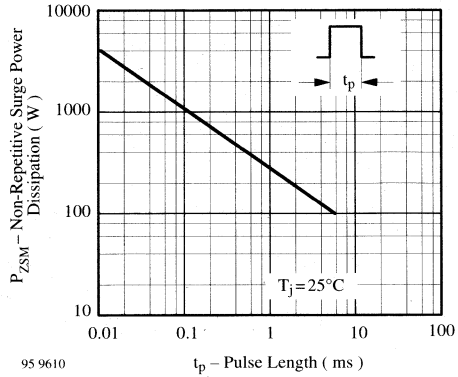

Figure 4. Non Repetitive Surge Power Dissipation vs. Pulse Length

Dimensions in mm

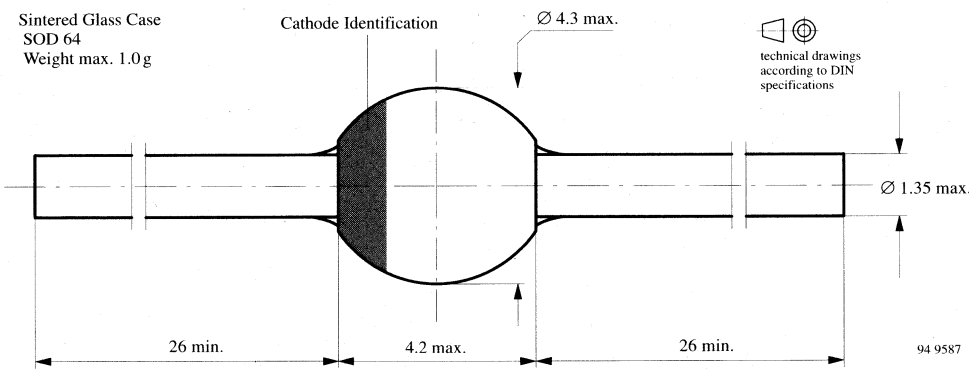

Silicon Epitaxial Planar Z–Diodes

Features

- Very sharp reverse characteristic
- Low reverse current level
- Low noise
- Very high stability
- Available with tighter tolerances
- V_Z–tolerance ± 2%

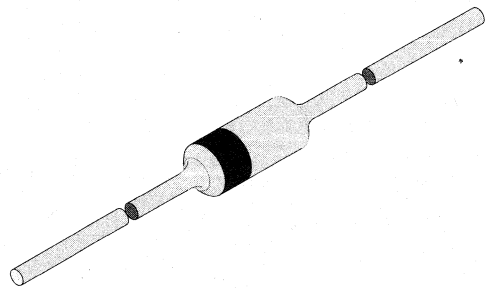

94 9367

Applications

Voltage stabilization

Absolute Maximum Ratings

$T_j = 25°C$

Parameter	Test Conditions	Type	Symbol	Value	Unit
Power dissipation	l=4mm, T_L=25°C		P_V	500	mW
Z–current			I_Z	P_V/V_Z	mA
Junction temperature			T_j	175	°C
Storage temperature range			T_{stg}	–65...+175	°C

Maximum Thermal Resistance

$T_j = 25°C$

Parameter	Test Conditions	Symbol	Value	Unit
Junction ambient	l=4mm, T_L=constant	R_{thJA}	300	K/W

Characteristics

$T_j = 25°C$

Parameter	Test Conditions	Type	Symbol	Min	Typ	Max	Unit
Forward voltage	I_F=100mA		V_F			1	V

Type	V_{Znorm}	I_{ZT} for	V_{ZT} and	r_{zjT}	r_{zjk} at	I_{ZK}	I_R and	I_R [2] at	V_R	TK_{VZ}
BZX55/B...	V	mA	V	Ω	Ω	mA	µA	µA	V	%/K
2V4	2.4	5	2.35 to 2.45	< 85	< 600	1	< 50	< 100	1	–0.09 to –0.06
2V7	2.7	5	2.64 to 2.76	< 85	< 600	1	< 10	< 50	1	–0.09 to –0.06
3V0	3.0	5	2.94 to 3.06	< 90	< 600	1	< 4	< 40	1	–0.08 to –0.05
3V3	3.3	5	3.24 to 3.36	< 90	< 600	1	< 2	< 40	1	–0.08 to –0.05
3V6	3.6	5	3.52 to 3.68	< 90	< 600	1	< 2	< 40	1	–0.08 to –0.05
3V9	3.9	5	3.82 to 3.98	< 90	< 600	1	< 2	< 40	1	–0.08 to –0.05
4V3	4.3	5	4.22 to 4.38	< 90	< 600	1	< 1	< 20	1	–0.06 to –0.03
4V7	4.7	5	4.60 to 4.80	< 80	< 600	1	< 0.5	< 10	1	–0.05 to +0.02
5V1	5.1	5	5.00 to 5.20	< 60	< 550	1	< 0.1	< 2	1	–0.02 to +0.02
5V6	5.6	5	5.48 to 5.72	< 40	< 450	1	< 0.1	< 2	1	–0.05 to +0.05
6V2	6.2	5	6.08 to 6.32	< 10	< 200	1	< 0.1	< 2	2	0.03 to 0.06
6V8	6.8	5	6.66 to 6.94	< 8	< 150	1	< 0.1	< 2	3	0.03 to 0.07
7V5	7.5	5	7.35 to 7.65	< 7	< 50	1	< 0.1	< 2	5	0.03 to 0.07
8V2	8.2	5	8.04 to 8.36	< 7	< 50	1	< 0.1	< 2	6.2	0.03 to 0.08
9V1	9.1	5	8.92 to 9.28	< 10	< 50	1	< 0.1	< 2	6.8	0.03 to 0.09
10	10	5	9.80 to 10.20	< 15	< 70	1	< 0.1	< 2	7.5	0.03 to 0.1
11	11	5	10.78 to 11.22	< 20	< 70	1	< 0.1	< 2	8.2	0.03 to 0.11
12	12	5	11.76 to 12.24	< 20	< 90	1	< 0.1	< 2	9.1	0.03 to 0.11
13	13	5	12.74 to 13.26	< 26	< 110	1	< 0.1	< 2	10	0.03 to 0.11
15	15	5	14.70 to 15.30	< 30	< 110	1	< 0.1	< 2	11	0.03 to 0.11
16	16	5	15.70 to 16.30	< 40	< 170	1	< 0.1	< 2	12	0.03 to 0.11
18	18	5	17.64 to 18.36	< 50	< 170	1	< 0.1	< 2	13	0.03 to 0.11
20	20	5	19.60 to 20.40	< 55	< 220	1	< 0.1	< 2	15	0.03 to 0.11
22	22	5	21.55 to 22.45	< 55	< 220	1	< 0.1	< 2	16	0.04 to 0.12
24	24	5	23.5 to 24.5	< 80	< 220	1	< 0.1	< 2	18	0.04 to 0,12
27	27	5	26.4 to 27.6	< 80	< 220	1	< 0.1	< 2	20	0.04 to 0.12
30	30	5	29.4 to 30.6	< 80	< 220	1	< 0.1	< 2	22	0.04 to 0.12
33	33	5	32.4 to 33.6	< 80	< 220	1	< 0.1	< 2	24	0.04 to 0.12
36	36	5	35.3 to 36.7	< 80	< 220	1	< 0.1	< 2	27	0.04 to 0.12
39	39	2.5	38.2 to 39.8	< 90	< 500	0.5	< 0.1	< 5	30	0.04 to 0.12
43	43	2.5	42.1 to 43.9	< 90	< 600	0.5	< 0.1	< 5	33	0.04 to 0.12
47	47	2.5	46.1 to 47.9	< 110	< 700	0.5	< 0.1	< 5	36	0.04 to 0.12
51	51	2.5	50.0 to 52.0	< 125	< 700	0.5	< 0.1	< 10	39	0.04 to 0.12
56	56	2.5	54.9 to 57.1	< 135	< 1000	0.5	< 0.1	< 10	43	0.04 to 0.12
62	62	2.5	60.8 to 63.2	< 150	< 1000	0.5	< 0.1	< 10	47	0.04 to 0.12
68	68	2.5	66.6 to 69.4	< 200	< 1000	0.5	< 0.1	< 10	51	0.04 to 0.12
75	75	2.5	73.5 to 76.5	< 250	< 1500	0.5	< 0.1	< 10	56	0.04 to 0.12

Typical Characteristics (T_j = 25°C unless otherwise specified)

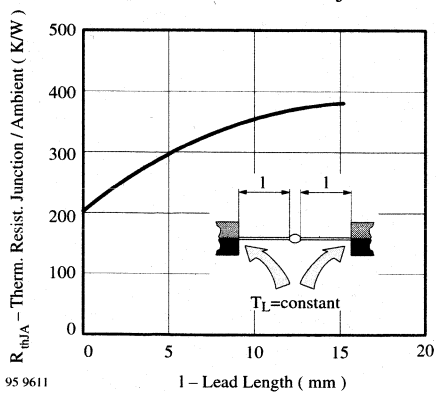

Figure 1. Thermal Resistance vs. Lead Length

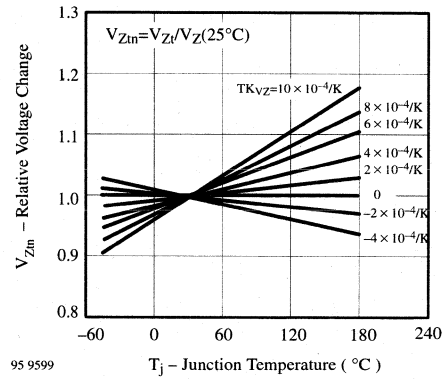

Figure 4. Typical Change of Working Voltage vs. Junction Temperature

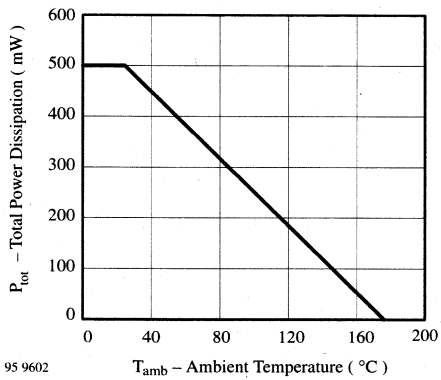

Figure 2. Total Power Dissipation vs. Ambient Temperature

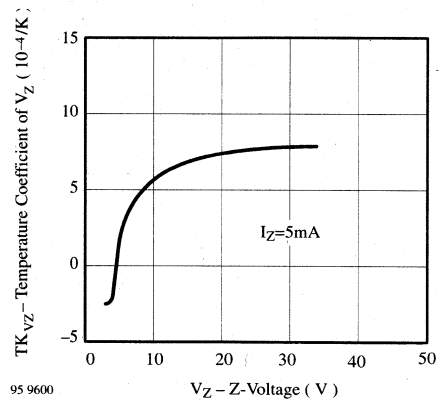

Figure 5. Temperature Coefficient of Vz vs. Z–Voltage

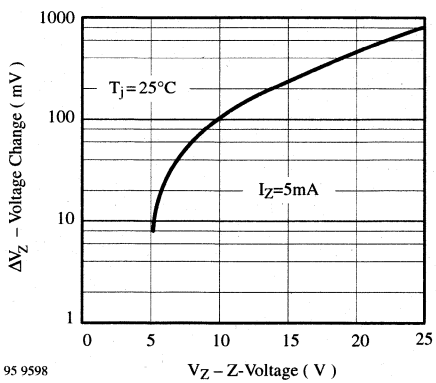

Figure 3. Typical Change of Working Voltage under Operating Conditions at T_{amb}=25°C

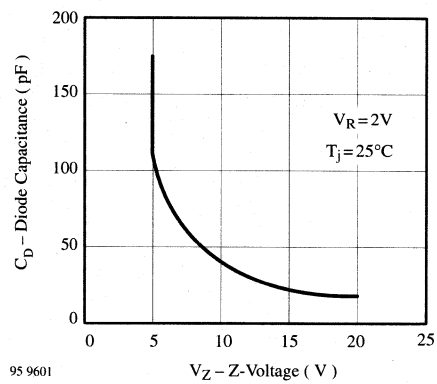

Figure 6. Diode Capacitance vs. Z–Voltage

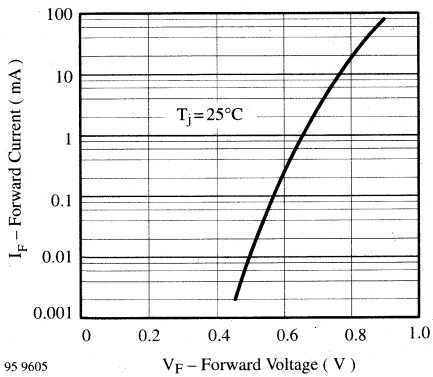

Figure 7. Forward Current vs. Forward Voltage

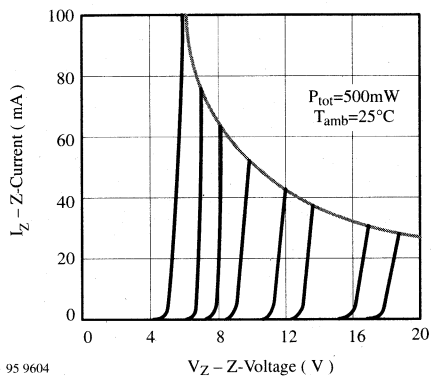

Figure 8. Z–Current vs. Z–Voltage

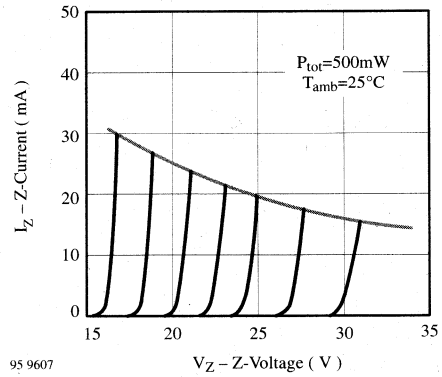

Figure 9. Z–Current vs. Z–Voltage

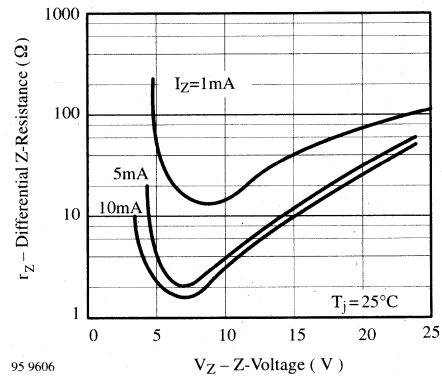

Figure 10. Differential Z–Resistance vs. Z–Voltage

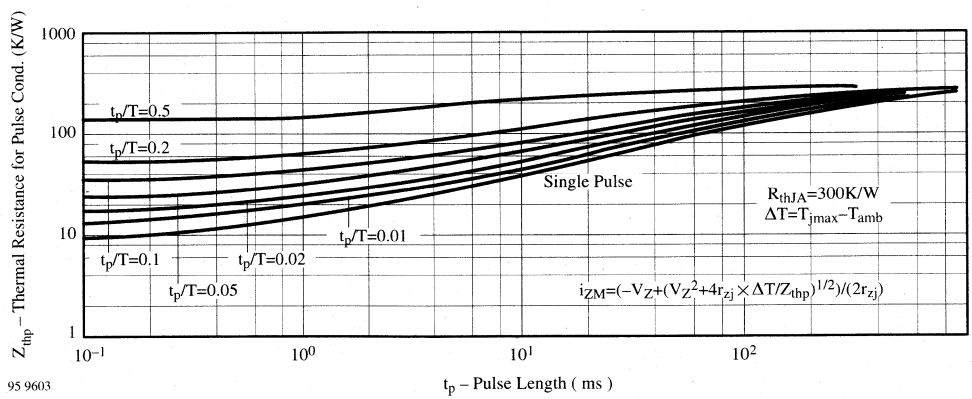

Figure 11. Thermal Response

Dimensions in mm

technical drawings
according to DIN
specifications

94 9366

Standard Glass Case
54 A 2 DIN 41880
JEDEC DO 35
Weight max. 0.3 g

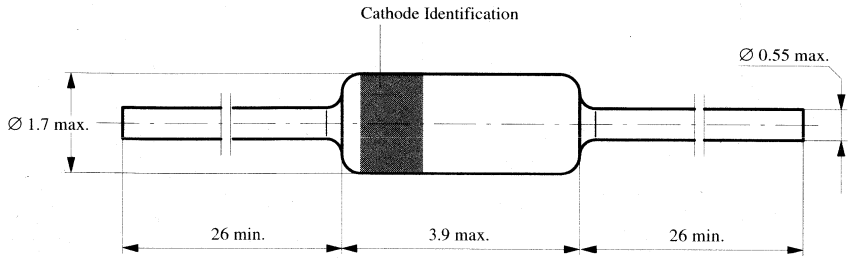

Silicon Epitaxial Planar Z–Diodes

Features

- Very sharp reverse characteristic
- Low reverse current level
- Very high stability
- Low noise
- Available with tighter tolerances

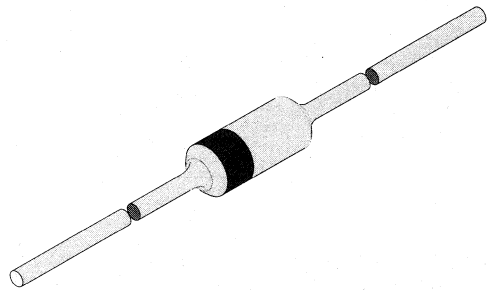

94 9367

Applications

Voltage stabilization

Absolute Maximum Ratings

$T_j = 25°C$

Parameter	Test Conditions	Type	Symbol	Value	Unit
Power dissipation	l=4mm, T_L=25°C		P_V	500	mW
Z–current			I_Z	P_V/V_Z	mA
Junction temperature			T_j	175	°C
Storage temperature range			T_{stg}	–65...+175	°C

Maximum Thermal Resistance

$T_j = 25°C$

Parameter	Test Conditions	Symbol	Value	Unit
Junction ambient	l=4mm, T_L=constant	R_{thJA}	300	K/W

Characteristics

$T_j = 25°C$

Parameter	Test Conditions	Type	Symbol	Min	Typ	Max	Unit
Forward voltage	I_F=200mA		V_F			1.5	V

Type	V_{Znom}	I_{ZT} for	V_{ZT} [1] and	r_{zjT}	r_{zjK} at	I_{ZK}	I_R and	I_R [2] at	V_R	TK_{VZ}
BZX55C...	V	mA	V	Ω	Ω	mA	µA	µA	V	%/K
2V4	2.4	5	2.28 to 2.56	< 85	< 600	1	< 50	< 100	1	–0.09 to –0.06
2V7	2.7	5	2.5 to 2.9	< 85	< 600	1	< 10	< 50	1	–0.09 to –0.06
3V0	3.0	5	2.8 to 3.2	< 85	< 600	1	< 4	< 40	1	–0.08 to –0.05
3V3	3.3	5	3.1 to 3.5	< 85	< 600	1	< 2	< 40	1	–0.08 to –0.05
3V6	3.6	5	3.4 to 3.8	< 85	< 600	1	< 2	< 40	1	–0.08 to –0.05
3V9	3.9	5	3.7 to 4.1	< 85	< 600	1	< 2	< 40	1	–0.08 to –0.05
4V3	4.3	5	4.0 to 4.6	< 75	< 600	1	< 1	< 20	1	–0.06 to –0.03
4V7	4.7	5	4.4 to 5.0	< 60	< 600	1	< 0.5	< 10	1	–0.05 to +0.02
5V1	5.1	5	4.8 to 5.4	< 35	< 550	1	< 0.1	< 2	1	–0.02 to +0.02
5V6	5.6	5	5.2 to 6.0	<25	< 450	1	< 0.1	< 2	1	–0.05 to +0.05
6V2	6.2	5	5.8 to 6.6	< 10	< 200	1	< 0.1	< 2	2	0.03 to 0.06
6V8	6.8	5	6.4 to 7.2	< 8	< 150	1	< 0.1	< 2	3	0.03 to 0.07
7V5	7.5	5	7.0 to 7.9	< 7	< 50	1	< 0.1	< 2	5	0.03 to 0.07
8V2	8.2	5	7.7 to 8.7	< 7	< 50	1	< 0.1	< 2	6.2	0.03 to 0.08
9V1	9.1	5	8.5 to 9.6	< 10	< 50	1	< 0.1	< 2	6.8	0.03 to 0.09
10	10	5	9.4 to 10.6	< 15	< 70	1	< 0.1	< 2	7.5	0.03 to 0.1
11	11	5	10.4 to 11.6	< 20	< 70	1	< 0.1	< 2	8.2	0.03 to 0.11
12	12	5	11.4 to 12.7	< 20	< 90	1	< 0.1	< 2	9.1	0.03 to 0.11
13	13	5	12.4 to 14.1	< 26	< 110	1	< 0.1	< 2	10	0.03 to 0.11
15	15	5	13.8 to 15.6	< 30	< 110	1	< 0.1	< 2	11	0.03 to 0.11
16	16	5	15.3 to 17.1	< 40	< 170	1	< 0.1	< 2	12	0.03 to 0.11
18	18	5	16.8 to 19.1	< 50	< 170	1	< 0.1	< 2	13	0.03 to 0.11
20	20	5	18.8 to 21.2	< 55	< 220	1	< 0.1	< 2	15	0.03 to 0.11
22	22	5	20.8 to 23.3	< 55	< 220	1	< 0.1	< 2	16	0.04 to 0.12
24	24	5	22.8 to 25.6	< 80	< 220	1	< 0.1	< 2	18	0.04 to 0.12
27	27	5	25.1 to 28.9	< 80	< 220	1	< 0.1	< 2	20	0.04 to 0.12
30	30	5	28 to 32	< 80	< 220	1	< 0.1	< 2	22	0.04 to 0.12
33	33	5	31 to 35	< 80	< 220	1	< 0.1	< 2	24	0.04 to 0.12
36	36	5	34 to 38	< 80	< 220	1	< 0.1	< 2	27	0.04 to 0.12
39	39	2.5	37 to 41	< 90	< 500	0.5	< 0.1	< 5	30	0.04 to 0.12
43	43	2.5	40 to 46	< 90	< 600	0.5	< 0.1	< 5	33	0.04 to 0.12
47	47	2.5	44 to 50	< 110	< 700	0.5	< 0.1	< 5	36	0.04 to 0.12
51	51	2.5	48 to 54	< 125	< 700	0.5	< 0.1	< 10	39	0.04 to 0.12
56	56	2.5	52 to 60	< 135	< 1000	0.5	< 0.1	< 10	43	0.04 to 0.12
62	62	2.5	58 to 66	< 150	< 1000	0.5	< 0.1	< 10	47	0.04 to 0.12
68	68	2.5	64 to 72	< 200	< 1000	0.5	< 0.1	< 10	51	0.04 to 0.12
75	75	2.5	70 to 79	< 250	< 1500	0.5	< 0.1	< 10	56	0.04 to 0.12

1) Tighter tolerances available on request:
BZX55A... ± 1% of V_{Znom}
BZX55B... ± 2% of V_{Znom}
BZX55F... ± 3% of V_{Znom}

2) at T_j = 150°C

Typical Characteristics (T_j = 25°C unless otherwise specified)

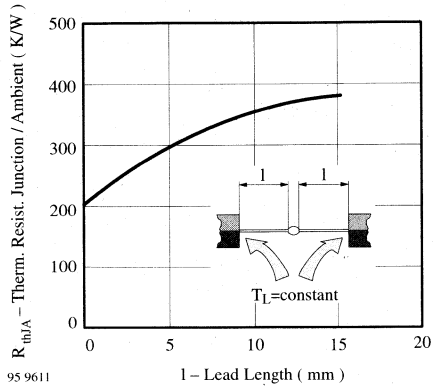

Figure 1. Thermal Resistance vs. Lead Length

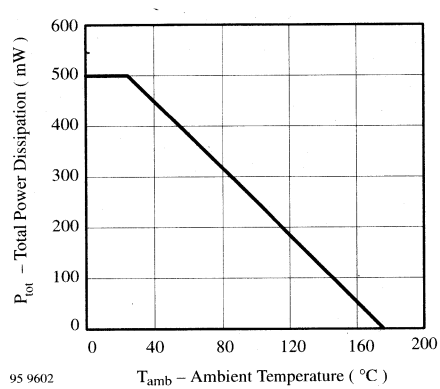

Figure 2. Total Power Dissipation vs. Ambient Temperature

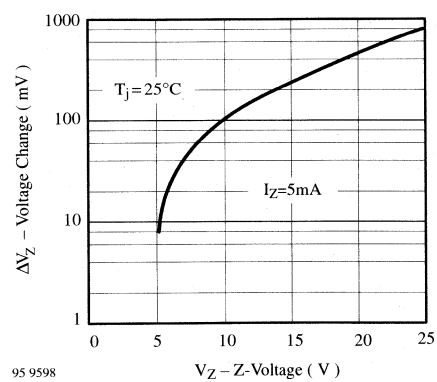

Figure 3. Typical Change of Working Voltage under Operating Conditions at T_{amb}=25°C

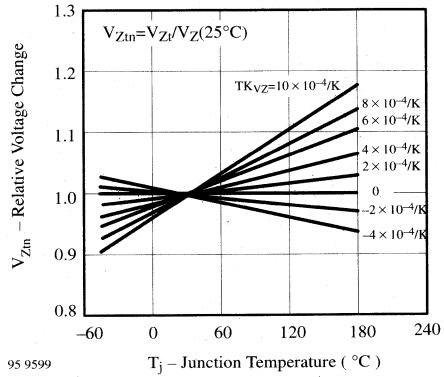

Figure 4. Typical Change of Working Voltage vs. Junction Temperature

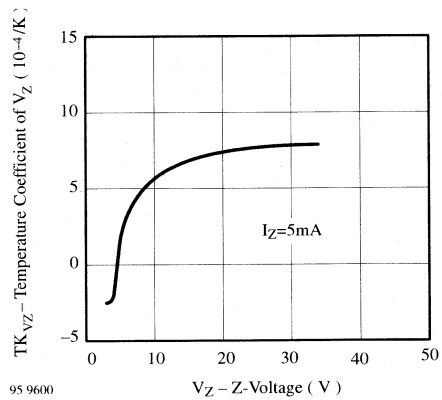

Figure 5. Temperature Coefficient of Vz vs. Z–Voltage

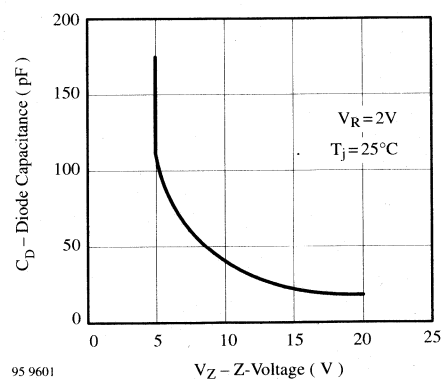

Figure 6. Diode Capacitance vs. Z–Voltage

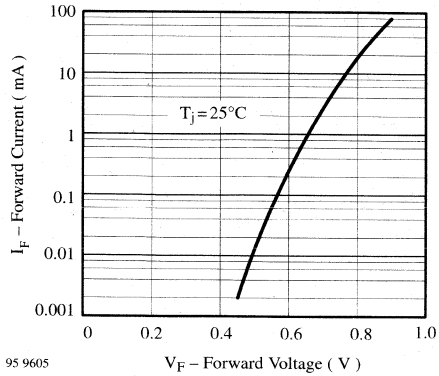

Figure 7. Forward Current vs. Forward Voltage

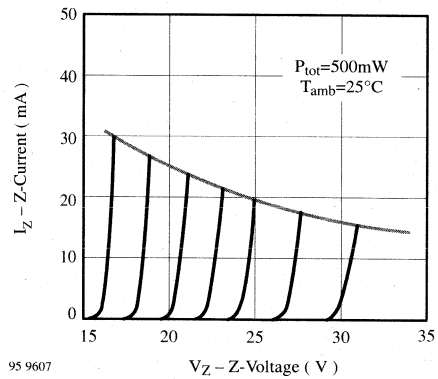

Figure 9. Z–Current vs. Z–Voltage

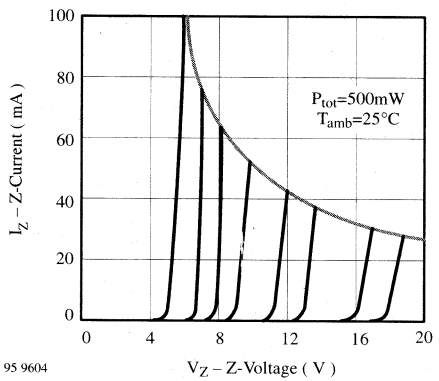

Figure 8. Z–Current vs. Z–Voltage

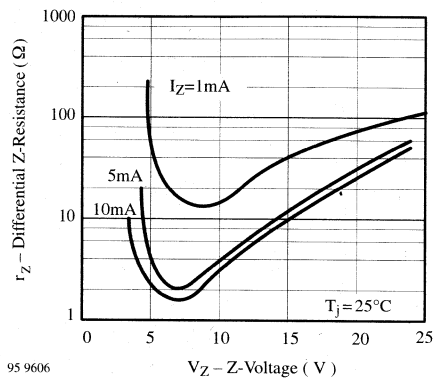

Figure 10. Differential Z–Resistance vs. Z–Voltage

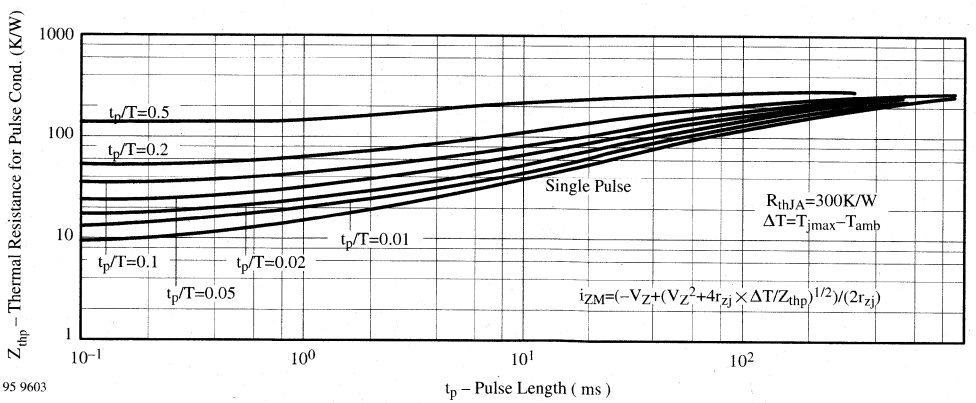

Figure 11. Thermal Response

Dimensions in mm

technical drawings
according to DIN
specifications

94 9366

Standard Glass Case
54 A 2 DIN 41880
JEDEC DO 35
Weight max. 0.3 g

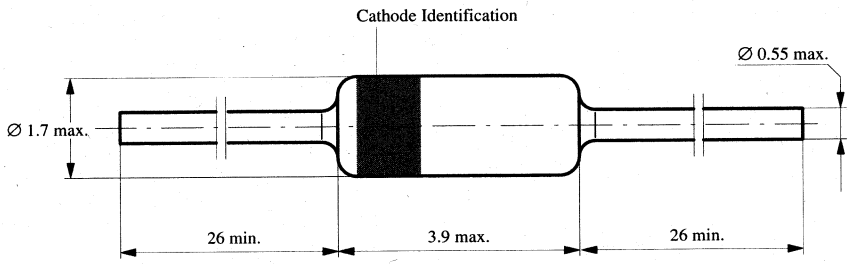

Silicon Epitaxial Planar Z–Diodes

Features

- Sharp edge in reverse characteristics
- Low reverse current
- Low noise
- Very high stability

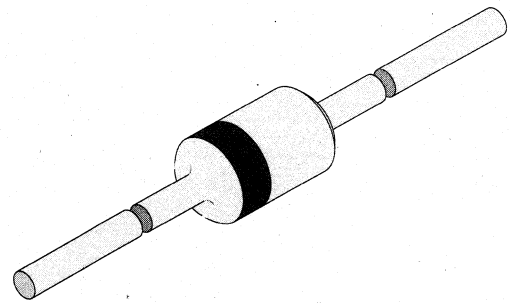

94 9369

Applications

Voltage stabilization

Absolute Maximum Ratings

$T_j = 25°C$

Parameter	Test Conditions	Type	Symbol	Value	Unit
Power dissipation	l=4mm, T_L=25°C		P_V	1.3	W
Junction temperature			T_j	175	°C
Storage temperature range			T_{stg}	–65...+175	°C

Maximum Thermal Resistance

$T_j = 25°C$

Parameter	Test Conditions	Symbol	Value	Unit
Junction ambient	l=4mm, T_L=constant	R_{thJA}	110	K/W

Characteristics

$T_j = 25°C$

Parameter	Test Conditions	Type	Symbol	Min	Typ	Max	Unit
Forward voltage	I_F=200mA		V_F			1	V

Type BZX85C...	V_{Znorm} V	I_{ZT} for mA	V_{ZT} V	and r_{zjT} Ω	r_{zjk} at Ω	I_{ZK} mA	I_R at µA	V_R V	TK_{VZ} %/K
2V7	2.7	80	2.64 to 2.76	< 20	< 400	1	< 150	1	–0.08 to –0.05
3V0	3.0	80	2.94 to 3.06	< 20	< 400	1	< 100	1	–0.08 to –0.05
3V3	3.3	80	3.24 to 3.36	< 20	< 400	1	< 40	1	–0.08 to –0.05
3V6	3.6	60	3.52 to 3.68	< 20	< 500	1	< 20	1	–0.08 to –0.05
3V9	3.9	60	3.82 to 3.98	< 15	< 500	1	< 10	1	–0.07 to –0.02
4V3	4.3	50	4.22 to 4.38	< 13	< 500	1	< 3	1	–0.07 to –0.01
4V7	4.7	45	4.60 to 4.80	< 13	< 600	1	< 3	1	–0.03 to +0.04
5V1	5.1	45	5.00 to 5.20	< 10	< 500	1	< 1	1.5	–0.01 to +0.04
5V6	5.6	45	5.48 to 5.72	< 7	< 400	1	< 1	2	0 to +0.045
6V2	6.2	35	6.08 to 6.32	< 4	< 300	1	< 1	3	+0.01 to +0.055
6V8	6.8	35	6.66 to 6.94	< 3.5	< 300	1	< 1	4	+0.015 to +0.06
7V5	7.5	35	7.35 to 7.65	< 3	< 200	0.5	< 1	4.5	+0.02 to +0.065
8V2	8.2	25	8.04 to 8.36	< 5	< 200	0.5	< 1	6.2	0.03 to 0.07
9V1	9.1	25	8.92 to 9.28	< 5	< 200	0.5	< 1	6.8	0.035 to 0.075
10	10	25	9.80 to 10.20	< 7	< 200	0.5	< 0.5	7	0.04 to 0.08
11	11	20	10.78 to 11.22	< 8	< 300	0.5	< 0.5	8.2	0.045 to 0.08
12	12	20	11.76 to 12.24	< 9	< 350	0.5	< 0.5	9.1	0.045 to 0.085
13	13	20	12.74 to 13.26	< 10	< 400	0.5	< 0.5	10	0.05 to 0.085
15	15	15	14.70 to 15.30	< 15	< 500	0.5	< 0.5	11	0.055 to 0.09
16	16	15	15.70 to 16.30	< 15	< 500	0.5	< 0.5	12	0.055 to 0.09
18	18	15	17.64 to 18.36	< 20	< 500	0.5	< 0.5	13	0.06 to 0.09
20	20	10	19.60 to 20.40	< 24	< 600	0.5	< 0.5	15	0.06 to 0.09
22	22	10	21.55 to 22.45	< 25	< 600	0.5	< 0.5	16	0.06 to 0.095
24	24	10	23.5 to 24.5	< 25	< 600	0.5	< 0.5	18	0.06 to 0.095
27	27	8	26.4 to 27.6	< 30	< 750	0.25	< 0.5	20	0.06 to 0.095
30	30	8	29.4 to 30.6	< 30	< 1000	0.25	< 0.5	22	0.06 to 0.095
33	33	8	32.4 to 33.6	< 35	< 1000	0.25	< 0.5	24	0.06 to 0.095
36	36	8	35.3 to 36.7	< 40	< 1000	0.25	< 0.5	27	0.06 to 0.095
39	39	6	38.2 to 39.8	< 50	< 1000	0.25	< 0.5	30	0.06 to 0.095

Typical Characteristics (T_j = 25°C unless otherwise specified)

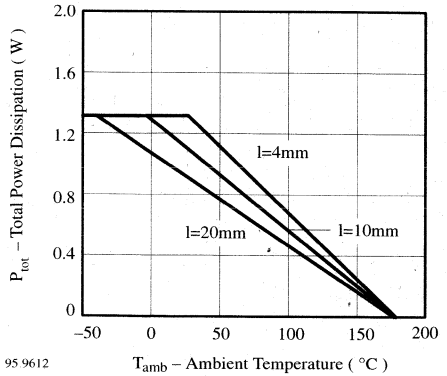

Figure 1. Total Power Dissipation vs. Ambient Temperature

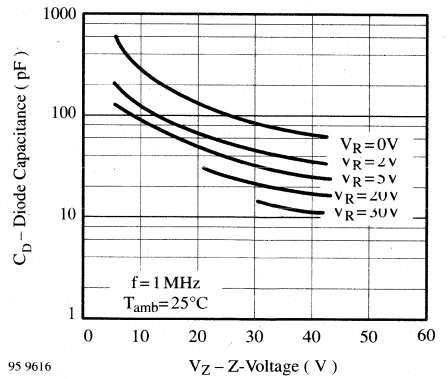

Figure 3. Diode Capacitance vs. Z–Voltage

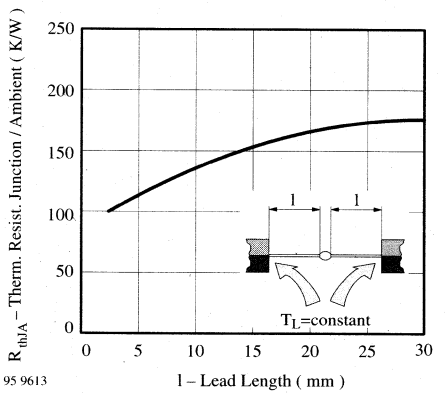

Figure 2. Thermal Resistance vs. Lead Length

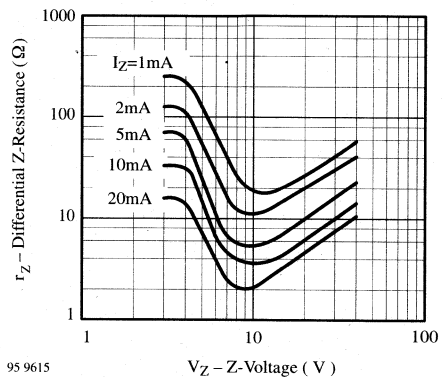

Figure 4. Differential Z–Resistance vs. Z–Voltage

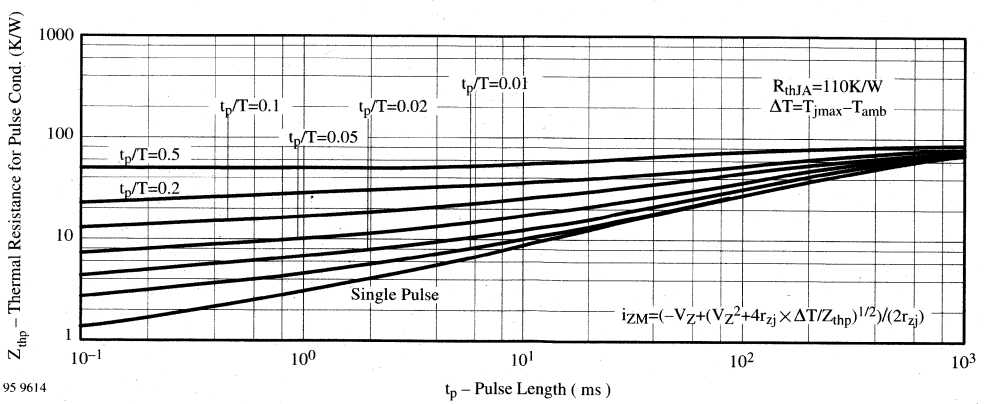

Figure 5. Thermal Response

Dimensions in mm

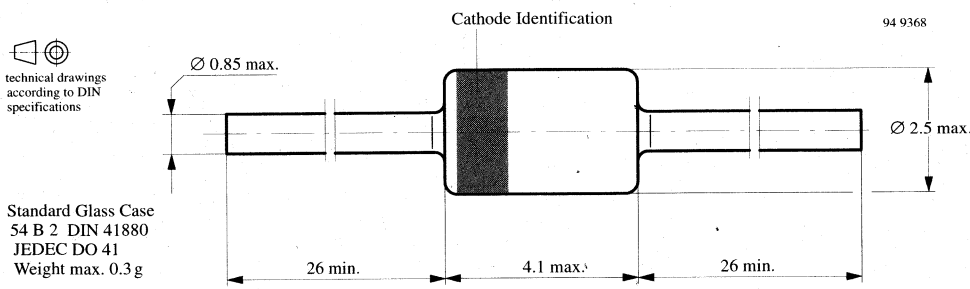

Silicon Epitaxial Planar Z–Diodes

Features

- Sharp edge in reverse characteristics
- Low reverse current
- Low noise
- Very high stability
- Available with tighter tolerances

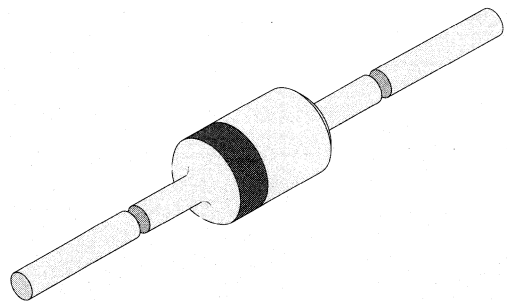

94 9369

Applications

Voltage stabilization

Absolute Maximum Ratings

$T_j = 25°C$

Parameter	Test Conditions	Type	Symbol	Value	Unit
Power dissipation	l=4mm, T_L=25°C		P_V	1.3	W
Junction temperature			T_j	175	°C
Storage temperature range			T_{stg}	–65...+175	°C

Maximum Thermal Resistance

$T_j = 25°C$

Parameter	Test Conditions	Symbol	Value	Unit
Junction ambient	l=4mm, T_L=constant	R_{thJA}	110	K/W

Characteristics

$T_j = 25°C$

Parameter	Test Conditions	Type	Symbol	Min	Typ	Max	Unit
Forward voltage	I_F=200mA		V_F			1	V

Type BZX85C...	V_{Znom} V	I_{ZT} mA	for V_{ZT} [1] V	and r_{zjT} Ω	r_{zjk} at Ω	I_{ZK} mA	I_R at μA	V_R V	TK_{VZ} %/K
2V7	2.7	80	2.5 to 2.9	< 20	< 400	1	< 150	1	–0.08 to –0.05
3V0	3.0	80	2.8 to 3.2	< 20	< 400	1	< 100	1	–0.08 to –0.05
3V3	3.3	80	3.1 to 3.5	< 20	< 400	1	< 40	1	–0.08 to –0.05
3V6	3.6	60	3.4 to 3.8	< 20	< 500	1	< 20	1	–0.08 to –0.05
3V9	3.9	60	3.7 to 4.1	< 15	< 500	1	< 10	1	–0.07 to –0.02
4V3	4.3	50	4.0 to 4.6	< 13	< 500	1	< 3	1	–0.07 to –0.01
4V7	4.7	45	4.4 to 5.0	< 13	< 600	1	< 3	1	–0.03 to +0.04
5V1	5.1	45	4.8 to 5.4	< 10	< 500	1	< 1	1.5	–0.01 to +0.04
5V6	5.6	45	5.2 to 6.0	< 7	< 400	1	< 1	2	0 to +0.045
6V2	6.2	35	5.8 to 6.6	< 4	< 300	1	< 1	3	+0.01 to +0.055
6V8	6.8	35	6.4 to 7.2	< 3.5	< 300	1	< 1	4	+0.015 to +0.06
7V5	7.5	35	7.0 to 7.9	< 3	< 200	0.5	< 1	4.5	+0.02 to +0.065
8V2	8.2	25	7.7 to 8.7	< 5	< 200	0.5	< 1	6.2	0.03 to 0.07
9V1	9.1	25	8.5 to 9.6	< 5	< 200	0.5	< 1	6.8	0.035 to 0.075
10	10	25	9.4 to 10.6	< 7	< 200	0.5	< 0.5	7	0.04 to 0.08
11	11	20	10.4 to 11.6	< 8	< 300	0.5	< 0.5	8.2	0.045 to 0.08
12	12	20	11.4 to 12.7	< 9	< 350	0.5	< 0.5	9.1	0.045 to 0.085
13	13	20	12.4 to 14.1	< 10	< 400	0.5	< 0.5	10	0.05 to 0.085
15	15	15	13.8 to 15.6	< 15	< 500	0.5	< 0.5	11	0.055 to 0.09
16	16	15	15.3 to 17.1	< 15	< 500	0.5	< 0.5	12	0.055 to 0.09
18	18	15	16.8 to 19.1	< 20	< 500	0.5	< 0.5	13	0.06 to 0.09
20	20	10	18.8 to 21.2	< 24	< 600	0.5	< 0.5	15	0.06 to 0.09
22	22	10	20.8 to 23.3	< 25	< 600	0.5	< 0.5	16	0.06 to 0.095
24	24	10	22.8 to 25.6	< 25	< 600	0.5	< 0.5	18	0.06 to 0.095
27	27	8	25.1 to 28.9	< 30	< 750	0.25	< 0.5	20	0.06 to 0.095
30	30	8	28 to 32	< 30	< 1000	0.25	< 0.5	22	0.06 to 0.095
33	33	8	31 to 35	< 35	< 1000	0.25	< 0.5	24	0.06 to 0.095
36	36	8	34 to 38	< 40	< 1000	0.25	< 0.5	27	0.06 to 0.095
39	39	6	37 to 41	< 50	< 1000	0.25	< 0.5	30	0.06 to 0.095
43	43	6	40 to 46	< 50	< 1000	0.25	< 0.5	33	0.06 to 0.095
47	47	4	44 to 50	< 90	< 1500	0.25	< 0.5	36	0.06 to 0.095
51	51	4	48 to 54	< 115	< 1500	0.25	< 0.5	39	0.06 to 0.095
56	56	4	52 to 60	< 120	< 2000	0.25	< 0.5	43	0.06 to 0.095
62	62	4	58 to 66	< 125	< 2000	0.25	< 0.5	47	0.06 to 0.095
68	68	4	64 to 72	< 130	< 2000	0.25	< 0.5	51	0.06 to 0.095
75	75	4	70 to 79	< 135	< 2000	0.25	< 0.5	56	0.06 to 0.095

[1] Tighter tolerances available on request:
BZX85B... ± 2% of V_{Znom}

Typical Characteristics (T_j = 25°C unless otherwise specified)

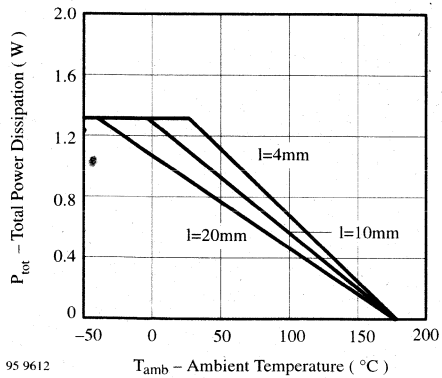

Figure 1. Total Power Dissipation vs. Ambient Temperature

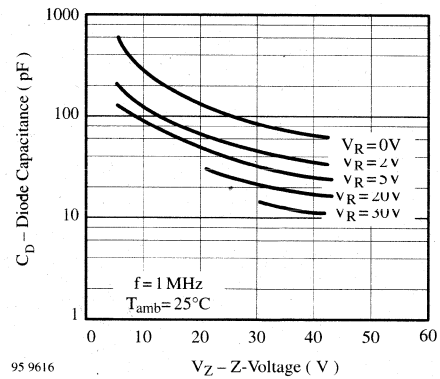

Figure 3. Diode Capacitance vs. Z–Voltage

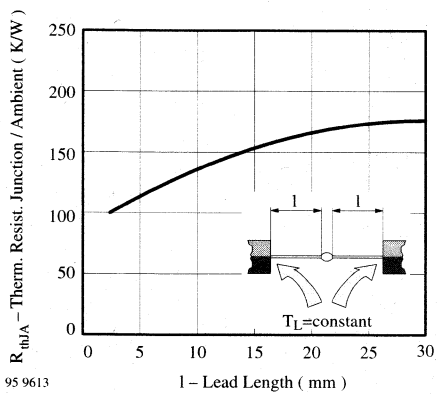

Figure 2. Thermal Resistance vs. Lead Length

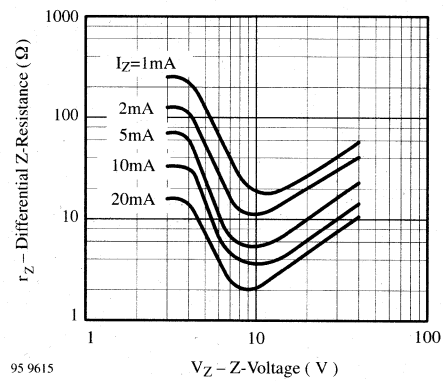

Figure 4. Differential Z–Resistance vs. Z–Voltage

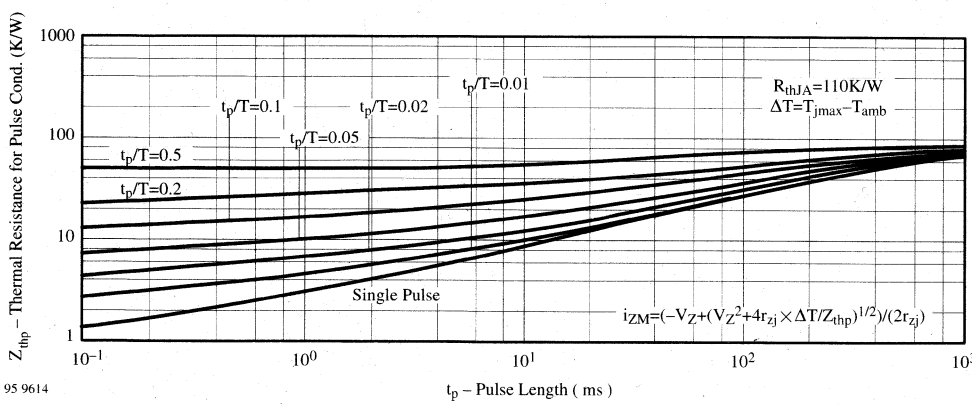

Figure 5. Thermal Response

Dimensions in mm

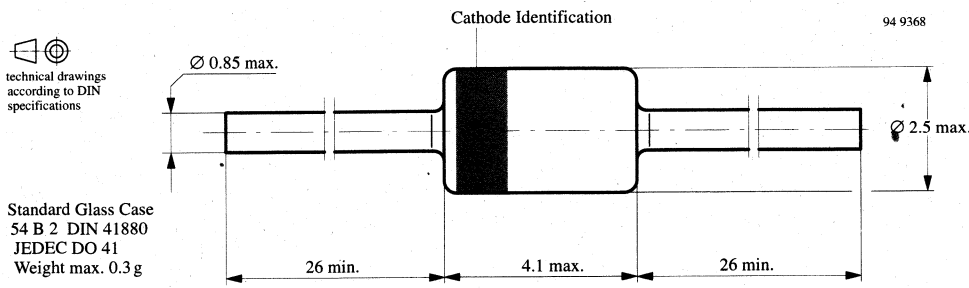

Silicon Z–Diodes

Features

- Very sharp reverse characteristic
- Very high stability
- Electrical data identical with the devices 1N5221B...1N5267B
- Low reverse current level
- V_Z–tolerance ± 5%

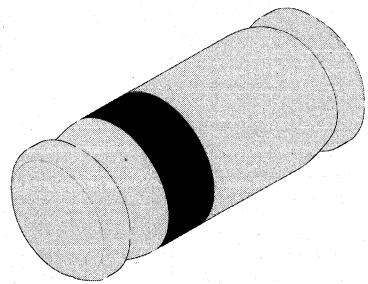

94 9371

Applications

Voltage stabilization

Absolute Maximum Ratings

T_j = 25°C

Parameter	Test Conditions	Type	Symbol	Value	Unit
Power dissipation	R_{thJA}<300K/W, T_{amb}=25°C		P_V	500	mW
Z–current			I_Z	P_V/V_Z	mA
Junction temperature			T_j	175	°C
Storage temperature range			T_{stg}	–65...+175	°C

Maximum Thermal Resistance

T_j = 25°C

Parameter	Test Conditions	Symbol	Value	Unit
Junction lead	Junction to tie–point (electrodes)	R_{thJL}	300	K/W
Junction ambient	on PC board 50mmx50mmx1.6mm	R_{thJA}	500	K/W

Characteristics

T_j = 25°C

Parameter	Test Conditions	Type	Symbol	Min	Typ	Max	Unit
Forward voltage	I_F=200mA		V_F			1.1	V

Type	V_{Znom} [1)]	I_{ZT} for	r_{zjT}	r_{zjk} at	I_{ZK}	I_R at	V_R	TK_{VZ}
	V	mA	Ω	Ω	mA	µA	V	%/K
TZM5221B	2.4	20	< 30	< 1200	0.25	< 100	1.0	< –0.085
TZM5222B	2.5	20	< 30	< 1250	0.25	< 100	1.0	< –0.085
TZM5223B	2.7	20	< 30	< 1300	0.25	< 75	1.0	< –0.080
TZM5224B	2.8	20	< 30	< 1400	0.25	< 75	1.0	< –0.080
TZM5225B	3.0	20	< 29	< 1600	0.25	< 50	1.0	< –0.075
TZM5226B	3.3	20	< 28	< 1600	0.25	< 25	1.0	< –0.070
TZM5227B	3.6	20	< 24	< 1700	0.25	< 15	1.0	< –0.065
TZM5228B	3.9	20	< 23	< 1900	0.25	< 10	1.0	< –0.060
TZM5229B	4.3	20	< 22	< 2000	0.25	< 5	1.0	< ±0.055
TZM5230B	4.7	20	< 19	< 1900	0.25	< 5	2.0	< ±0.030
TZM5231B	5.1	20	< 17	< 1600	0.25	< 5	2.0	< ±0.030
TZM5232B	5.6	20	< 11	< 1600	0.25	< 5	3.0	< +0.038
TZM5233B	6.0	20	< 7	< 1600	0.25	< 5	3.5	< +0.038
TZM5234B	6.2	20	< 7	< 1000	0.25	< 5	4.0	< +0.045
TZM5235B	6.8	20	< 5	< 750	0.25	< 3	5.0	< +0.050
TZM5236B	7.5	20	< 6	< 500	0.25	< 3	6.0	< +0.058
TZM5237B	8.2	20	< 8	< 500	0.25	< 3	6.5	< +0.062
TZM5238B	8.7	20	< 8	< 600	0.25	< 3	6.5	< +0.065
TZM5239B	9.1	20	< 10	< 600	0.25	< 3	7.0	< +0.068
TZM5240B	10	20	< 17	< 600	0.25	< 3	8.0	< +0.075
TZM5241B	11	20	< 22	< 600	0.25	< 2	8.4	< +0.076
TZM5242B	12	20	< 30	< 600	0.25	< 1	9.1	< +0.077
TZM5243B	13	9.5	< 13	< 600	0.25	< 0.5	9.9	< +0.079
TZM5244B	14	9.0	< 15	< 600	0.25	< 0.1	10	< +0.082
TZM5245B	15	8.5	< 16	< 600	0.25	< 0.1	11	< +0.082
TZM5246B	16	7.8	< 17	< 600	0.25	< 0.1	12	< +0.083
TZM5247B	17	7.4	< 19	< 600	0.25	< 0.1	13	< +0.084
TZM5248B	18	7.0	< 21	< 600	0.25	< 0.1	14	< +0.085
TZM5249B	19	6.6	< 23	< 600	0.25	< 0.1	14	< +0.086
TZM5250B	20	6.2	< 25	< 600	0.25	< 0.1	15	< +0.086
TZM5251B	22	5.6	< 29	< 600	0.25	< 0.1	17	< +0.087
TZM5252B	24	5.2	< 33	< 600	0.25	< 0.1	18	< +0.088
TZM5253B	25	5.0	< 35	< 600	0.25	< 0.1	19	< +0.089
TZM5254B	27	4.6	< 41	< 600	0.25	< 0.1	21	< +0.090
TZM5255B	28	4.5	< 44	< 600	0.25	< 0.1	21	< +0.091

Type	V_{Znom} [1]	I_{ZT} for r_{zjT}		r_{zjk} at I_{ZK}		I_R at V_R		TK_{VZ}
	V	mA	Ω	Ω	mA	µA	V	%/K
TZM5256B	30	4.2	< 49	< 600	0.25	< 0.1	23	< +0.091
TZM5257B	33	3.8	< 58	< 700	0.25	< 0.1	25	< +0.092
TZM5258B	36	3.4	< 70	< 700	0.25	< 0.1	27	< +0.093
TZM5259B	39	3.2	< 80	< 800	0.25	< 0.1	30	< +0.094
TZM5260B	43	3.0	< 93	< 900	0.25	< 0.1	33	< +0.095
TZM5261B	47	2.7	< 105	< 1000	0.25	< 0.1	36	< +0.095
TZM5262B	51	2.5	< 125	< 1100	0.25	< 0.1	39	< +0.096
TZM5263B	56	2.2	< 150	< 1300	0.25	< 0.1	43	< +0.096
TZM5264B	60	2.1	< 170	< 1400	0.25	< 0.1	46	< +0.097
TZM5265B	62	2.0	< 185	< 1400	0.25	< 0.1	47	< +0.097
TZM5266B	68	1.8	< 230	< 1600	0.25	< 0.1	52	< +0.097
TZM5267B	75	1.7	< 270	< 1700	0.25	< 0.1	56	< +0.098

[1] Based on dc measurement at thermal equilibrium;
case temperature maintained at 30°C ± 2°C.

Dimensions in mm

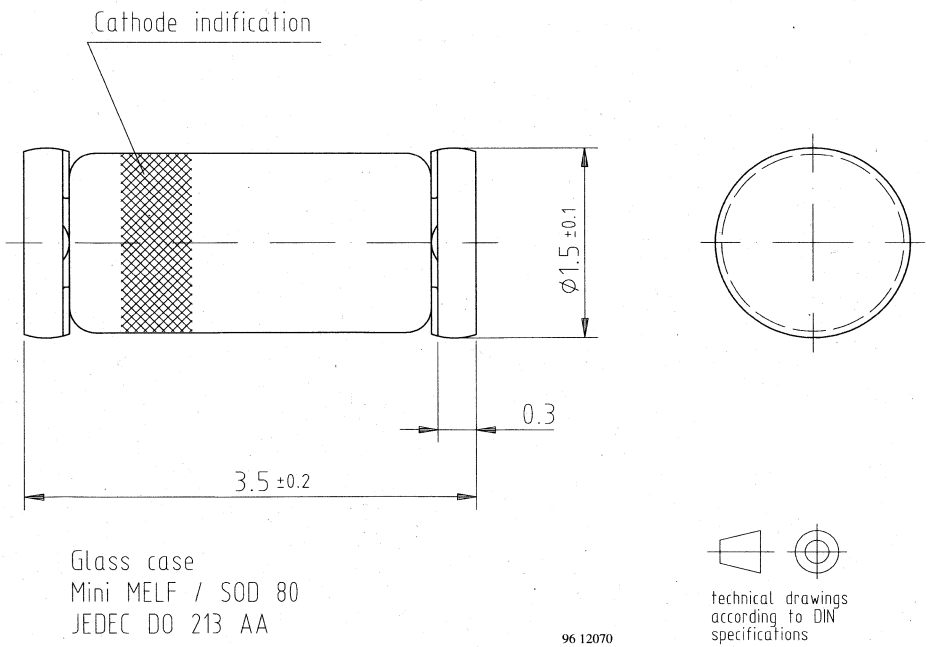

Silicon Epitaxial Planar Z–Diodes

Features

- Very sharp reverse characteristic
- Low reverse current level
- Available with tighter tolerances
- Very high stability
- Low noise
- V_Z–tolerance ± 2%

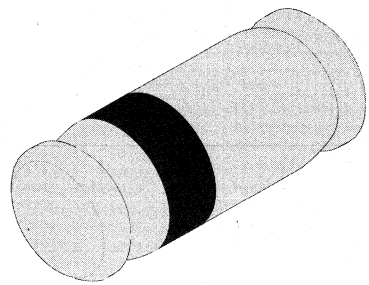

94 9371

Applications

Voltage stabilization

Absolute Maximum Ratings

T_j = 25°C

Parameter	Test Conditions	Type	Symbol	Value	Unit
Power dissipation	$R_{thJA} \leqq 300K/W$		P_V	500	mW
Z–current			I_Z	P_V/V_Z	mA
Junction temperature			T_j	175	°C
Storage temperature range			T_{stg}	–65...+175	°C

Maximum Thermal Resistance

T_j = 25°C

Parameter	Test Conditions	Symbol	Value	Unit
Junction lead		R_{thJL}	300	K/W
Junction ambient	on PC board 50mmx50mmx1.6mm	R_{thJA}	500	K/W

Characteristics

T_j = 25°C

Parameter	Test Conditions	Type	Symbol	Min	Typ	Max	Unit
Forward voltage	I_F=200mA		V_F			1.5	V

Type	V_{Znorm}	I_{ZT} for	V_{ZT} and	r_{zjT}	r_{zjk} at	I_{ZK}	I_R and	I_R 2) at	V_R	TK_{VZ}
TZMB...	V	mA	V	Ω	Ω	mA	µA	µA	V	%/K
2V4	2.4	5	2.35 to 2.45	< 85	< 600	1	< 100	< 50	1	–0.09 to –0.06
2V7	2.7	5	2.64 to 2.76	< 85	< 600	1	< 10	< 50	1	–0.09 to –0.06
3V0	3.0	5	2.94 to 3.06	< 90	< 600	1	< 4	< 40	1	–0.08 to –0.05
3V3	3.3	5	3.24 to 3.36	< 90	< 600	1	< 2	< 40	1	–0.08 to –0.05
3V6	3.6	5	3.52 to 3.68	< 90	< 600	1	< 2	< 40	1	–0.08 to –0.05
3V9	3.9	5	3.82 to 3.98	< 90	< 600	1	< 2	< 40	1	–0.08 to –0.05
4V3	4.3	5	4.22 to 4.38	< 90	< 600	1	< 1	< 20	1	–0.06 to –0.03
4V7	4.7	5	4.60 to 4.80	< 80	< 600	1	< 0.5	< 10	1	–0.05 to +0.02
5V1	5.1	5	5.00 to 5.20	< 60	< 550	1	< 0.1	< 2	1	–0.02 to +0.02
5V6	5.6	5	5.48 to 5.72	< 40	< 450	1	< 0.1	< 2	1	–0.05 to +0.05
6V2	6.2	5	6.08 to 6.32	< 10	< 200	1	< 0.1	< 2	2	0.03 to 0.06
6V8	6.8	5	6.66 to 6.94	< 8	< 150	1	< 0.1	< 2	3	0.03 to 0.07
7V5	7.5	5	7.35 to 7.65	< 7	< 50	1	< 0.1	< 2	5	0.03 to 0.07
8V2	8.2	5	8.04 to 8.36	< 7	< 50	1	< 0.1	< 2	6.2	0.03 to 0.08
9V1	9.1	5	8.92 to 9.28	< 10	< 50	1	< 0.1	< 2	6.8	0.03 to 0.09
10	10	5	9.80 to 10.20	< 15	< 70	1	< 0.1	< 2	7.5	0.03 to 0.1
11	11	5	10.78 to 11.22	< 20	< 70	1	< 0.1	< 2	8.2	0.03 to 0.11
12	12	5	11.76 to 12.24	< 20	< 90	1	< 0.1	< 2	9.1	0.03 to 0.11
13	13	5	12.74 to 13.26	< 26	< 110	1	< 0.1	< 2	10	0.03 to 0.11
15	15	5	14.70 to 15.30	< 30	< 110	1	< 0.1	< 2	11	0.03 to 0.11
16	16	5	15.70 to 16.30	< 40	< 170	1	< 0.1	< 2	12	0.03 to 0.11
18	18	5	17.64 to 18.36	< 50	< 170	1	< 0.1	< 2	13	0.03 to 0.11
20	20	5	19.60 to 20.40	< 55	< 220	1	< 0.1	< 2	15	0.03 to 0.11
22	22	5	21.55 to 22.45	< 55	< 220	1	< 0.1	< 2	16	0.04 to 0.12
24	24	5	23.5 to 24.5	< 80	< 220	1	< 0.1	< 2	18	0.04 to 0,12
27	27	5	26.4 to 27.6	< 80	< 220	1	< 0.1	< 2	20	0.04 to 0.12
30	30	5	29.4 to 30.6	< 80	< 220	1	< 0.1	< 2	22	0.04 to 0.12
33	33	5	32.4 to 33.6	< 80	< 220	1	< 0.1	< 2	24	0.04 to 0.12
36	36	5	35.3 to 36.7	< 80	< 220	1	< 0.1	< 2	27	0.04 to 0.12
39	39	2.5	38.2 to 39.8	< 90	< 500	1	< 0.1	< 5	30	0.04 to 0.12
43	43	2.5	42.1 to 43.9	< 90	< 600	0.5	< 0.1	< 5	33	0.04 to 0.12
47	47	2.5	46.1 to 47.9	< 110	< 700	0.5	< 0.1	< 5	36	0.04 to 0.12
51	51	2.5	50.0 to 52.0	< 125	< 700	0.5	< 0.1	< 10	39	0.04 to 0.12
56	56	2.5	54.9 to 57.1	< 135	< 1000	0.5	< 0.1	< 10	43	0.04 to 0.12
62	62	2.5	60.8 to 63.2	< 150	< 1000	0.5	< 0.1	< 10	47	0.04 to 0.12
68	68	2.5	66.6 to 69.4	< 200	< 1000	0.5	< 0.1	< 10	51	0.04 to 0.12
75	75	2.5	73.5 to 76.5	< 250	< 1500	0.5	< 0.1	< 10	56	0.04 to 0.12

Typical Characteristics (T_j = 25°C unless otherwise specified)

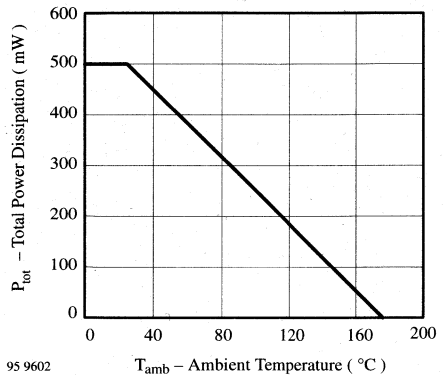

Figure 1. Total Power Dissipation vs. Ambient Temperature

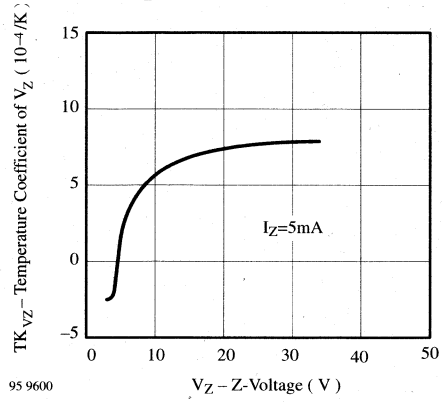

Figure 4. Temperature Coefficient of Vz vs. Z–Voltage

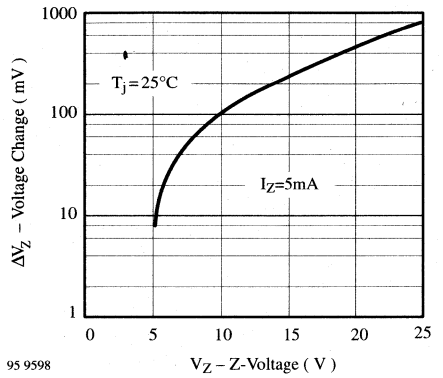

Figure 2. Typical Change of Working Voltage under Operating Conditions at T_{amb}=25°C

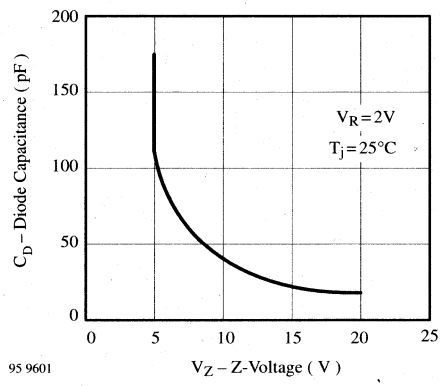

Figure 5. Diode Capacitance vs. Z–Voltage

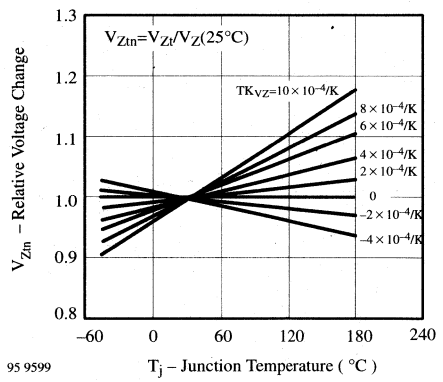

Figure 3. Typical Change of Working Voltage vs. Junction Temperature

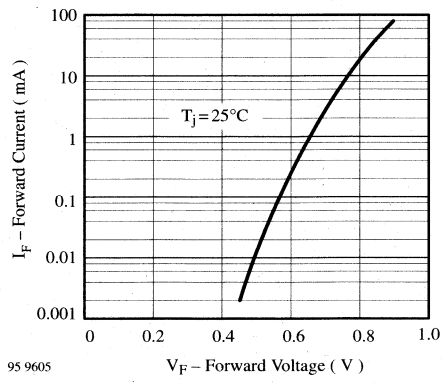

Figure 6. Forward Current vs. Forward Voltage

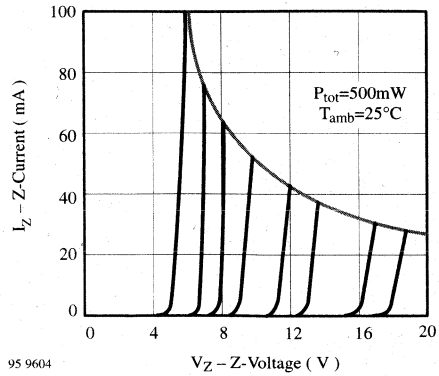

Figure 7. Z–Current vs. Z–Voltage

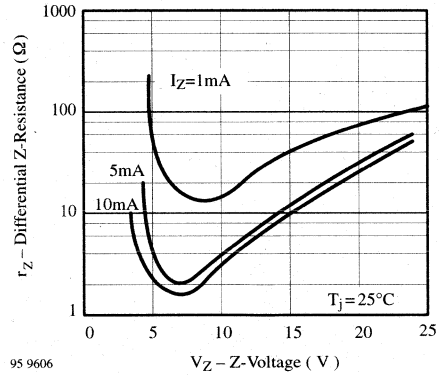

Figure 9. Differential Z–Resistance vs. Z–Voltage

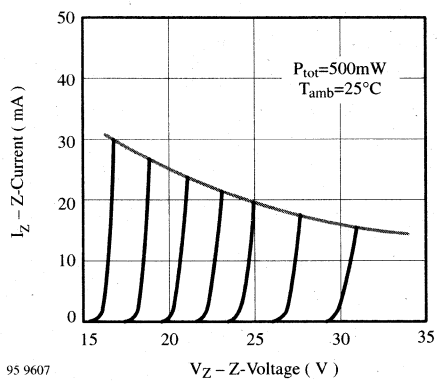

Figure 8. Z–Current vs. Z–Voltage

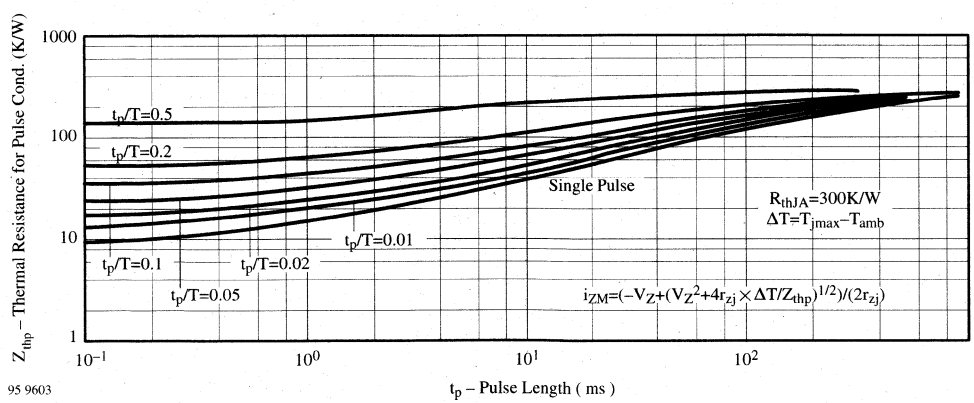

Figure 10. Thermal Response

Dimensions in mm

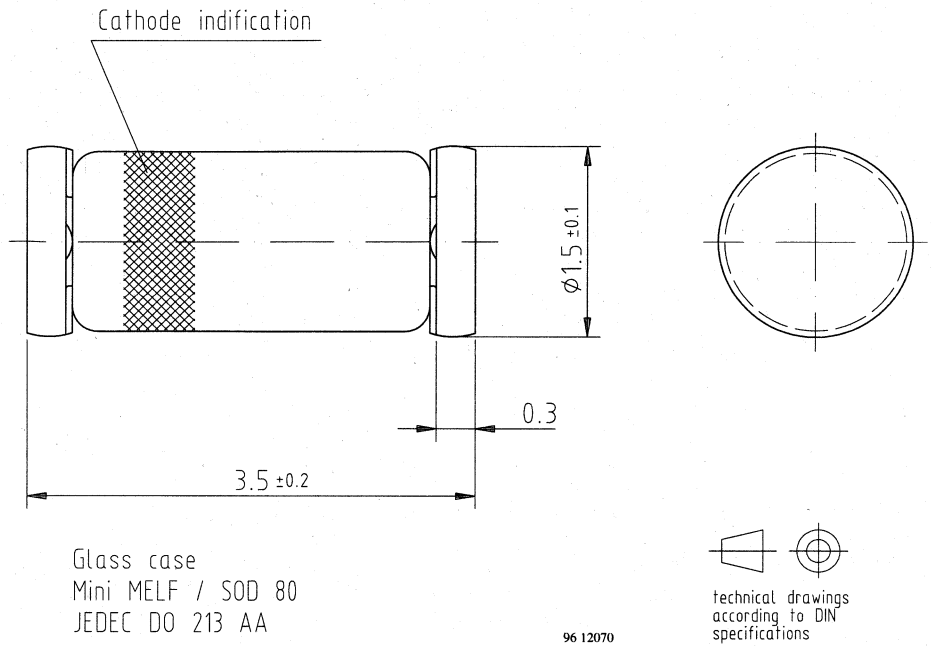

Silicon Epitaxial Planar Z–Diodes

Features

- Very sharp reverse characteristic
- Low reverse current level
- Available with tighter tolerances
- Very high stability
- Low noise

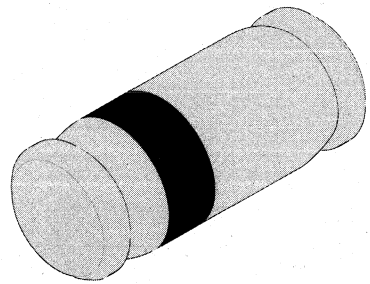

94 9371

Applications

Voltage stabilization

Absolute Maximum Ratings

$T_j = 25°C$

Parameter	Test Conditions	Type	Symbol	Value	Unit
Error during Connect – 6107					

Maximum Thermal Resistance

$T_j = 25°C$

Parameter	Test Conditions	Symbol	Value	Unit
Junction lead		R_{thJL}	300	K/W
Junction ambient	on PC board 50mmx50mmx1.6mm	R_{thJA}	500	K/W

Characteristics

$T_j = 25°C$

Parameter	Test Conditions	Type	Symbol	Min	Typ	Max	Unit
Forward voltage	I_F=200mA		V_F			1.5	V

Type TZMC...	V_{Znom} V	I_{ZT} for mA	V_{ZT} [1] V	and r_{zjT} Ω	r_{zjk} at Ω	I_{ZK} mA	I_R μA	and I_R [2] μA	at V_R V	TK_{VZ} %/K
2V4	2.4	5	2.28 to 2.56	< 85	< 600	1	< 50	< 100	1	–0.09 to –0.06
2V7	2.7	5	2.5 to 2.9	< 85	< 600	1	< 10	< 50	1	–0.09 to –0.06
3V0	3.0	5	2.8 to 3.2	< 90	< 600	1	< 4	< 40	1	–0.08 to –0.05
3V3	3.3	5	3.1 to 3.5	< 90	< 600	1	< 2	< 40	1	–0.08 to –0.05
3V6	3.6	5	3.4 to 3.8	< 90	< 600	1	< 2	< 40	1	–0.08 to –0.05
3V9	3.9	5	3.7 to 4.1	< 90	< 600	1	< 2	< 40	1	–0.08 to –0.05
4V3	4.3	5	4.0 to 4.6	< 90	< 600	1	< 1	< 20	1	–0.06 to –0.03
4V7	4.7	5	4.4 to 5.0	< 80	< 600	1	< 0.5	< 10	1	–0.05 to +0.02
5V1	5.1	5	4.8 to 5.4	< 60	< 550	1	< 0.1	< 2	1	–0.02 to +0.02
5V6	5.6	5	5.2 to 6.0	< 40	< 450	1	< 0.1	< 2	1	–0.05 to +0.05
6V2	6.2	5	5.8 to 6.6	< 10	< 200	1	< 0.1	< 2	2	0.03 to 0.06
6V8	6.8	5	6.4 to 7.2	< 8	< 150	1	< 0.1	< 2	3	0.03 to 0.07
7V5	7.5	5	7.0 to 7.9	< 7	< 50	1	< 0.1	< 2	5	0.03 to 0.07
8V2	8.2	5	7.7 to 8.7	< 7	< 50	1	< 0.1	< 2	6.2	0.03 to 0.08
9V1	9.1	5	8.5 to 9.6	< 10	< 50	1	< 0.1	< 2	6.8	0.03 to 0.09
10	10	5	9.4 to 10.6	< 15	< 70	1	< 0.1	< 2	7.5	0.03 to 0.1
11	11	5	10.4 to 11.6	< 20	< 70	1	< 0.1	< 2	8.2	0.03 to 0.11
12	12	5	11.4 to 12.7	< 20	< 90	1	< 0.1	< 2	9.1	0.03 to 0.11
13	13	5	12.4 to 14.1	< 26	< 110	1	< 0.1	< 2	10	0.03 to 0.11
15	15	5	13.8 to 15.6	< 30	< 110	1	< 0.1	< 2	11	0.03 to 0.11
16	16	5	15.3 to 17.1	< 40	< 170	1	< 0.1	< 2	12	0.03 to 0.11
18	18	5	16.8 to 19.1	< 50	< 170	1	< 0.1	< 2	13	0.03 to 0.11
20	20	5	18.8 to 21.2	< 55	< 220	1	< 0.1	< 2	15	0.03 to 0.11
22	22	5	20.8 to 23.3	< 55	< 220	1	< 0.1	< 2	16	0.04 to 0.12
24	24	5	22.8 to 25.6	< 80	< 220	1	< 0.1	< 2	18	0.04 to 0,12
27	27	5	25.1 to 28.9	< 80	< 220	1	< 0.1	< 2	20	0.04 to 0.12
30	30	5	28 to 32	< 80	< 220	1	< 0.1	< 2	22	0.04 to 0.12
33	33	5	31 to 35	< 80	< 220	1	< 0.1	< 2	24	0.04 to 0.12
36	36	5	34 to 38	< 80	< 220	1	< 0.1	< 2	27	0.04 to 0.12
39	39	2.5	37 to 41	< 90	< 500	0.5	< 0.1	< 5	30	0.04 to 0.12
43	43	2.5	40 to 46	< 90	< 600	0.5	< 0.1	< 5	33	0.04 to 0.12
47	47	2.5	44 to 50	< 110	< 700	0.5	< 0.1	< 5	36	0.04 to 0.12
51	51	2.5	48 to 54	< 125	< 700	0.5	< 0.1	< 10	39	0.04 to 0.12
56	56	2.5	52 to 60	< 135	< 1000	0.5	< 0.1	< 10	43	0.04 to 0.12
62	62	2.5	58 to 66	< 150	< 1000	0.5	< 0.1	< 10	47	0.04 to 0.12
68	68	2.5	64 to 72	< 200	< 1000	0.5	< 0.1	< 10	51	0.04 to 0.12
75	75	2.5	70 to 79	< 250	< 1500	0.5	< 0.1	< 10	56	0.04 to 0.12

1) Tighter tolerances available on request:
TZMA... ± 1% of V_{Znom}
TZMB... ± 2% of V_{Znom}
TZMF... ± 3% of V_{Znom}

2) at T_j = 150°C

Typical Characteristics (T_j = 25°C unless otherwise specified)

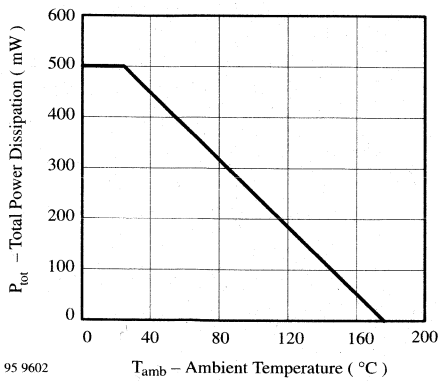

Figure 1. Total Power Dissipation vs. Ambient Temperature

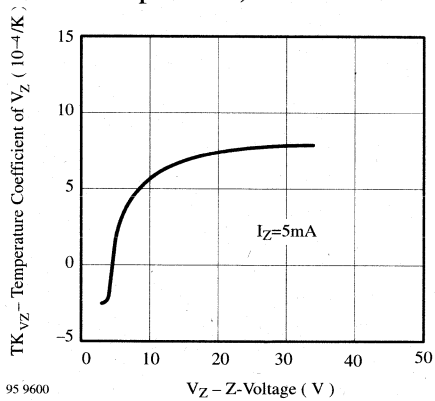

Figure 4. Temperature Coefficient of Vz vs. Z–Voltage

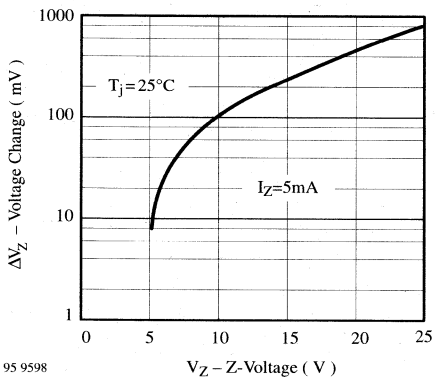

Figure 2. Typical Change of Working Voltage under Operating Conditions at T_{amb}=25°C

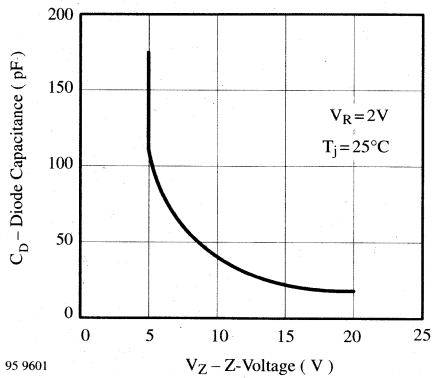

Figure 5. Diode Capacitance vs. Z–Voltage

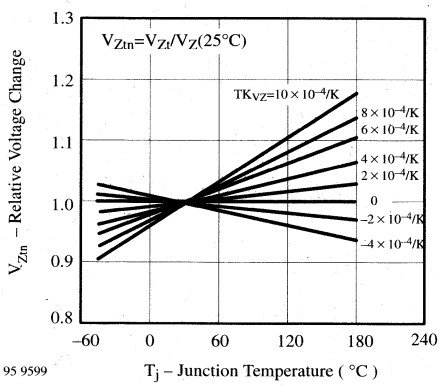

Figure 3. Typical Change of Working Voltage vs. Junction Temperature

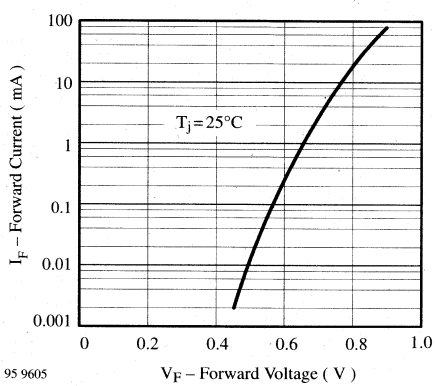

Figure 6. Forward Current vs. Forward Voltage

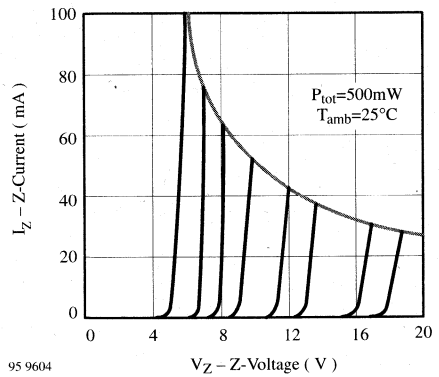

Figure 7. Z–Current vs. Z–Voltage

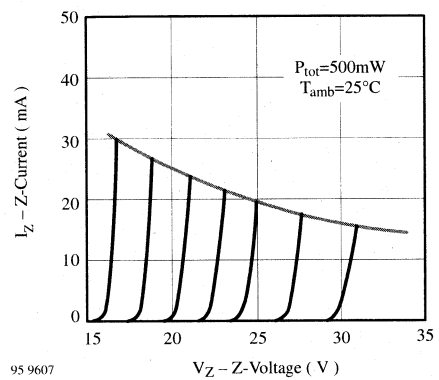

Figure 8. Z–Current vs. Z–Voltage

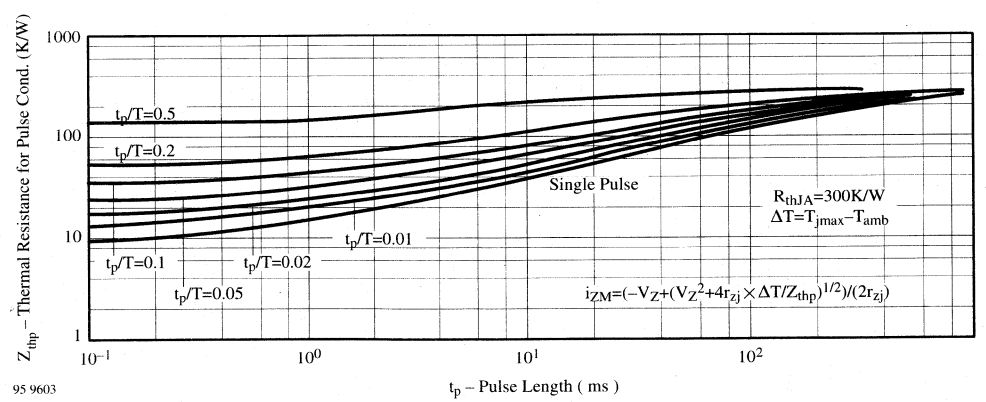

Figure 9. Differential Z–Resistance vs. Z–Voltage

Figure 10. Thermal Response

Dimensions in mm

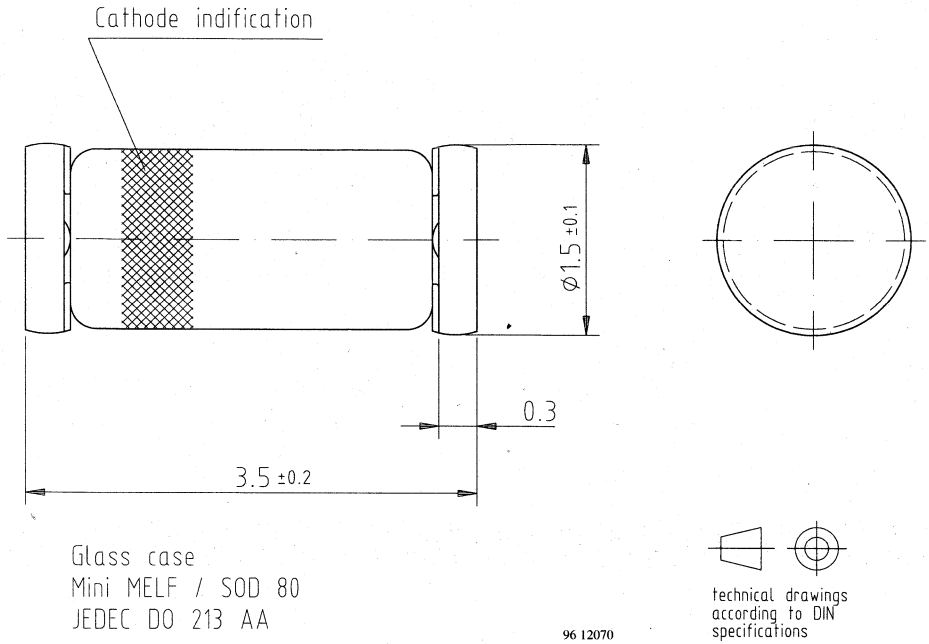

Silicon Power Z–Diodes

Features

- Very sharp reverse characteristic
- Very high stability
- Low reverse current level
- V_Z–tolerance ± 5%

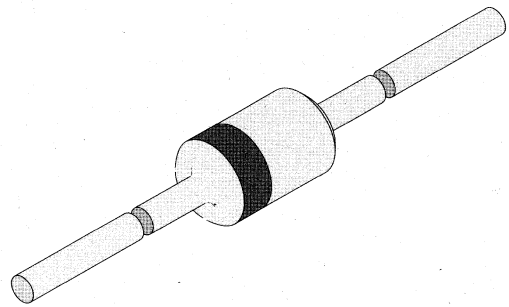

94 9369

Applications

Voltage stabilization

Absolute Maximum Ratings

$T_j = 25°C$

Parameter	Test Conditions	Type	Symbol	Value	Unit
Power dissipation	$T_{amb} \leqq 50°C$		P_V	1	W
Z–current			I_Z	P_V/V_Z	mA
Junction temperature			T_j	200	°C
Storage temperature range			T_{stg}	–65...+200	°C

Maximum Thermal Resistance

$T_j = 25°C$

Parameter	Test Conditions	Symbol	Value	Unit
Junction ambient	l=9.5mm (3/8"), T_L=constant	R_{thJA}	100	K/W

Characteristics

$T_j = 25°C$

Parameter	Test Conditions	Type	Symbol	Min	Typ	Max	Unit
Forward voltage	I_F=200mA		V_F			1.2	V

Type	V_{Znom} [1]	I_{ZT} for	r_{zjT}	r_{zjk} at	I_{ZK}	I_R at	V_R
1N4728A	3.3	76	< 10	< 400	1.0	< 100	1
1N4729A	3.6	69	< 10	< 400	1.0	< 100	1
1N4730A	3.9	64	< 9	< 400	1.0	< 50	1
1N4731A	4.3	58	< 9	< 400	1.0	< 10	1
1N4732A	4.7	53	< 8	< 500	1.0	< 10	1
1N4733A	5.1	49	< 7	< 550	1.0	< 10	1
1N4734A	5.6	45	< 5	< 600	1.0	< 10	2
1A4735A	6.2	41	< 2	< 700	1.0	< 10	3
1N4736A	6.8	37	< 3.5	< 700	1.0	< 10	4
1N4737A	7.5	34	< 4.0	< 700	0.5	< 10	5
1N4738A	8.2	31	< 4.5	< 700	0.5	< 10	6
1N4739A	9.1	28	< 5.0	< 700	0.5	< 10	7
1N4740A	10	25	< 7	< 700	0.25	< 10	7.6
1N4741A	11	23	< 8	< 700	0.25	< 5	8.4
1N4742A	12	21	< 9	< 700	0.25	< 5	9.1
1N4743A	13	19	< 10	< 100	0,25	< 5	9.9
1N4744A	15	17	< 14	< 700	0.25	< 5	11.4
1N4745A	16	15.5	< 16	< 700	0.25	< 5	12.2
1N4746A	18	14	< 20	< 750	0.25	< 5	13.7
1B4747A	20	12.5	< 22	< 750	0.25	< 5	15.2
1N4748A	22	11.5	< 23	< 750	0.25	< 5	16.7
1N4749A	24	10.5	< 25	< 750	0.25	< 5	18.2
1N4750A	27	9.5	< 35	< 750	0.25	< 5	20.6
1N4751A	30	8.5	< 40	< 1000	0.25	< 5	22.8
1N4752A	33	7.5	< 45	< 1000	0.25	< 5	25.1
1N4753A	36	7.0	< 50	< 1000	0.25	< 5	27.4
1N4754A	39	6.5	< 60	< 1000	0.25	< 5	29.7
1N4755A	43	6.0	< 70	< 1500	0.25	< 5	32.7
1N4756A	47	5.5	< 80	< 1500	0.25	< 5	35.8
1N4757A	51	5.0	< 95	< 1500	0.25	< 5	38.8
1N4758A	56	4.5	< 110	< 2000	0.25	< 5	42.6
1N4759A	62	4.0	< 125	< 2000	0.25	< 5	47.1
1N4760A	68	3.7	< 150	< 2000	0.25	< 5	51.7
1N4761A	75	3.3	< 175	< 2000	0.25	< 5	56.0

[1] Based on dc-measurement at thermal equilibrium while maintaining the lead temperature (T_L) at 30°C ± 1°C, 9.5 mm ($^3/_8$") from the diode body.

Dimensions in mm

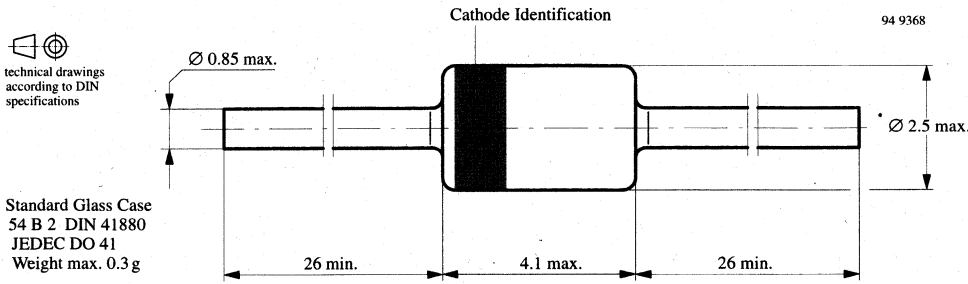

Silicon Z–Diodes

Features

- Very sharp reverse characteristic
- Very high stability
- Low reverse current level
- V_Z–tolerance ± 5%

Applications

Voltage stabilization

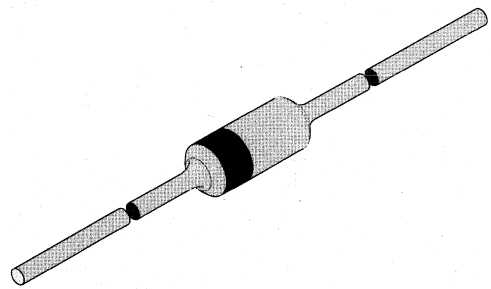

94 9367

Absolute Maximum Ratings

$T_j = 25°C$

Parameter	Test Conditions	Type	Symbol	Value	Unit
Power dissipation	$T_L \leqq 75°C$		P_V	500	mW
Z–current			I_Z	P_V/V_Z	mA
Junction temperature			T_j	200	°C
Storage temperature range			T_{stg}	–65...+200	°C

Maximum Thermal Resistance

$T_j = 25°C$

Parameter	Test Conditions	Symbol	Value	Unit
Junction ambient	l=9.5mm (3/8"), T_L=constant	R_{thJA}	300	K/W

Characteristics

$T_j = 25°C$

Parameter	Test Conditions	Type	Symbol	Min	Typ	Max	Unit
Forward voltage	I_F=200mA		V_F			1.1	V

Type	V_{Znom} [1]	I_{ZT} for	r_{zjT}	r_{zjk} at	I_{ZK}	I_R at	V_R	TK_{VZ}
	V	mA	Ω	Ω	mA	µA	V	%/K
1N5221B	2.4	20	< 30	< 1200	0.25	< 100	1.0	< –0.085
1N5222B	2.5	20	< 30	< 1250	0.25	< 100	1.0	< –0.085
1N5223B	2.7	20	< 30	< 1300	0.25	< 75	1.0	< –0.080
1N5224B	2.8	20	< 30	< 1400	0.25	< 75	1.0	< –0.080
1N5225B	3.0	20	< 29	< 1600	0.25	< 50	1.0	< –0.075
1N5226B	3.3	20	< 28	< 1600	0.25	< 25	1.0	< –0.070
1N5227B	3.6	20	< 24	< 1700	0.25	< 15	1.0	< –0.065
1N5228B	3.9	20	< 23	< 1900	0.25	< 10	1.0	< –0.060
1N5229B	4.3	20	< 22	< 2000	0.25	< 5	1.0	< +0.055
1N5230B	4.7	20	< 19	< 1900	0.25	< 5	2.0	< +0.030
1N5231B	5.1	20	< 17	< 1600	0.25	< 5	2.0	< +0.030
1N5232B	5.6	20	< 11	< 1600	0.25	< 5	3.0	< +0.038
1N5233B	6.0	20	< 7	< 1600	0.25	< 5	3.5	< +0.038
1N5234B	6.2	20	< 7	< 1000	0.25	< 5	4.0	< –0.045
1N5235B	6.8	20	< 5	< 750	0.25	< 3	5.0	< +0.050
1N5236A	7.5	20	< 6	< 500	0.25	< 3	6.0	< +0.058
1N5237B	8.2	20	< 8	< 500	0.25	< 3	6.5	< +0.062
1N5238B	8.7	20	< 8	< 600	0.25	< 3	6.5	< +0.065
1B5239B	9.1	20	< 10	< 600	0.25	< 3	7.0	< +0.068
1N5240B	10	20	< 17	< 600	0.25	< 3	8.0	< +0.075
1N5241B	11	20	< 22	< 600	0.25	< 2	8.4	< +0.076
1N5242B	12	20	< 30	< 600	0.25	< 1	9.1	< +0.077
1N5243B	13	9.5	< 13	< 600	0.25	< 0.5	9.9	< +0.079
1N5244B	14	9.0	< 15	< 600	0.25	< 0.1	10	< +0.082
1N5245B	15	8.5	< 16	< 600	0.25	< 0.1	11	< +0.082
1N5246B	16	7.8	< 17	< 600	0.25	< 0.1	12	< +0.083
1N5247B	17	7.4	< 19	< 600	0.25	< 0.1	13	< +0.084
1N5248B	18	7.0	< 21	< 600	0.25	< 0.1	14	< +0.085
1N5249B	19	6.6	< 23	< 600	0.25	< 0.1	14	< +0.086
1N5250B	20	6.2	< 25	< 600	0.25	< 0.1	15	< +0.086
1N5251B	22	5.6	< 29	< 600	0.25	< 0.1	17	< +0.087
1N5252B	24	5.2	< 33	< 600	0.25	< 0.1	18	< +0.088
1N5253B	25	5.0	< 35	< 600	0.25	< 0.1	19	< +0.089
1N5254B	27	4.6	< 41	< 600	0.25	< 0.1	21	< +0.090

Type	V_{Znom} [1] V	I_{ZT} for mA	r_{zjT} Ω	r_{zjk} at Ω	I_{ZK} mA	I_R at μA	V_R V	TK_{VZ} %/K
1N5255B	28	4.5	< 44	< 600	0.25	< 0.1	21	< +0.091
1N5256B	30	4.2	< 49	< 600	0.25	< 0.1	23	< +0.091
1N5257B	33	3.8	< 58	< 700	0.25	< 0.1	25	< +0.092
1N5258B	36	3.4	< 70	< 700	0.25	< 0.1	27	< +0.093
1B5259B	39	3.2	< 80	< 800	0.25	< 0.1	30	< +0.094
1N5260B	43	3.0	< 93	< 900	0.25	< 0.1	33	< +0.095
1N5261B	47	2.7	< 105	< 1000	0.25	< 0.1	36	< +0.095
1N5262B	51	2.5	< 125	< 1100	0.25	< 0.1	39	< +0.096
1N5263B	56	2.2	< 150	< 1300	0.25	< 0.1	43	< +0.096
1B5264B	60	2.1	< 170	< 1400	0.25	< 0.1	46	< +0.097
1N5265B	62	2.0	< 185	< 1400	0.25	< 0.1	47	< +0.097
1N5266B	68	1.8	< 230	< 1600	0.25	< 0.1	52	< +0.097
1N5267B	75	1.7	< 270	< 1700	0.25	< 0.1	56	< +0.098

[1] Based on dc measurement at thermal equilibrium;
lead length = 9.5 mm ($^3/_8$ ");
thermal resistance of heat sink = 30 K/W.

Dimensions in mm

technical drawings
according to DIN
specifications

94 9366

Standard Glass Case
54 A 2 DIN 41880
JEDEC DO 35
Weight max. 0.3 g

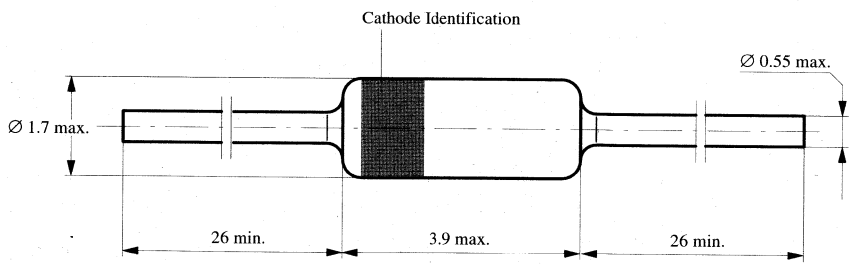

General Information

Diodes

Z- and Suppressor Diodes

Addresses

Addresses

Europe

Denmark

TEMIC Dansk
c/o AEG Industri A/S
Roskildevej 8–10
2620 Albertslund
Tel: 45 42 6485 22
Fax: 45 43 6262 28

France

TEMIC France
Les Quadrants – 3, avenue du centre
78054 St.–Quentin–en–Yvelines Cedex
B.P. 309
Tel: 33 1 3060 7000
Fax: 33 1 3060 7111

Germany

TEMIC TELEFUNKEN microelectronic GmbH
Erfurter Strasse 31
85386 Eching
Tel: 49 89 319 700
Fax: 49 89 319 4621

TEMIC TELEFUNKEN microelectronic GmbH
Kruppstrasse 6
45128 Essen
Tel: 49 201 24730 0
Fax: 49 201 24730 47

TEMIC TELEFUNKEN microelectronic GmbH
Theresienstrasse 2
74072 Heilbronn
Postfach 3535, PLZ 74025
Tel: 49 7131 67 0
Fax: 49 7131 67 2444

Hungary

TEMIC TELEFUNKEN microelectronic Hungary Kft.
Napmatka u. 6
1106 Budapest
Tel: 36 1 2608 542
Fax: 36 1 2649 017

Italy

TEMIC Italiana
Via Stephenson 94
20157 Milano
Tel: 39 2 33212 1
Fax: 39 2 33212 234

Spain

TEMIC Iberica
Principe de Vergara, 112
28002 Madrid
Tel: 34 1 562 7600
Fax: 34 1 562 7514

Sweden

TEMIC Nordic AB
Kavallerivaegen 24, Rissne
17202 Sundbyberg
Box 2042
Tel: 46 8 733 0090
Fax: 46 8 733 0558

United Kingdom

TEMIC U.K. Ltd.
Easthampstead Road
Bracknell
Berkshire RG12 1LX
Tel: 44 1344 707 300
Fax: 44 1344 427 371

North America

USA

Alabama

TEMIC North America Inc.
125 Electronics Boulevard, Ste.C–1
Huntsville
Alabama 35824
Tel: 1 205 461 7894
Fax: 1 205 461 7928

California

TEMIC North America
2201 Laurelwood Road
Santa Clara
California 95056–0951
Tel: 1 408 988 8000
Fax: 1 408 970 3950

TEMIC North America Inc.
12431 Landale Street
Studio City
California 91604
Tel: 1 818 985 0558
Fax: 1 818 985 0418

Georgia

TEMIC North America Inc.
6045 Atlantic Blvd.,Ste.212
Norcross
Georgia 30071
Tel: 1 770 662 1598
Fax: 1 770 662 1561

Illinois 60192

TEMIC North America Inc.
5401 Trillium BLVD.,Ste.275
Hoffman Estates
Illinois 60192
Tel: 1 847 645 0038
Fax: 1 847 645 0041

Michigan

TEMIC North America Inc.
Continental Plaza
2701 Troy Center Drive, Ste.220
Troy
Michigan 48084
Tel: 1 810 244 0610
Fax: 1 810 244 0848

New Hampshire

TEMIC North America Inc.
c/o Siliconix Inc.
5 Casey Circle Nashua
Nashua
New Hampshire 03062
Tel: 1 603 598 2541
Fax: 1 603 886 9603

New Jersey

TEMIC North America Inc.
180 Mount Airy Road, Ste.100
Basking Ridge
New Jersey 07920
Tel: 1 908 630 9200
Fax: 1 908 630 9201

New York

TEMIC North America Inc.
3 River Island Drive
Brewerton
New York 13029
Tel: 1 315 676 4228
Fax: 1 315 676 2244

TEMIC North America Inc.
16 Rockledge Ave, Ste.56–1
Scarborough
New York 10510
Tel: 1 914 945 0618
Fax: 1 914 945 0769

Sales Offices

North America
USA / Mexico

North Carolina
TEMIC North Carolina
5525 Doemont Drive
Apex
North Carolina 27502
Tel: 1 919 662 9595
Fax: 1 919 662 9520

Texas
TEMIC North America Inc.
2100 West Loop South, Ste.800
Houston
Texas 77027
Tel: 1 713 297 8871
Fax: 1 713 297 8872

TEMIC Technical Support Center
5605 North MacArthur Blvd.220
Irving
Texas 75038
Tel: 1 214 756 0302
Fax: 1 214 756 0702

Mexico
TEMIC Mexicana Division
Semiconductorres
13 Sur 505 – 10 Piso
72000 Puebla, PUE
Tel: 525 22 464634
Fax: 525 22 464404

China / Asia Pacific / Japan

China
TEMIC Shanghai Ltd.
3/F 501 Jiangchang West Road
200436 Shanghai
Tel: 86 21 5677 3398
Fax: 86 21 5603 3194

India
TEMIC India
8/53 South Patel Nagar
110008 New Delhi
Tel: 91 11 578 9133
Fax: 91 11 578 9133

Rep. of Singapore
TEMIC Singapore Pte Ltd
AEG Building, #02–00
25 Tampines Street 92
Singapore 528877
Tel: 65 788 6668
Fax: 65 788 0031

Japan
TEMIC Japan K.K.
Roppongi First Bldg. 17F
1–9–9, Roppongi, Minato–ku
Tokyo 106
Tel: 81 3 5562 3321
Fax: 81 3 5562 3316

Hong Kong
TEMIC Hong Kong Limited
Ste.1701, World Finance Centre
South Tower, Harbour City
17 Canton Road, Tsimshatsui
Kowloon
Tel: 852 23 789 789
Fax: 852 23 755 733

Korea
TEMIC Korea
Ste.605, Singsong Bldg.
#25–4, Yoido–Dong
Youngdeungpo–Ku
150–010 Seoul
Tel: 82 2 7851 136
Fax: 82 2 7851 137

Taiwan, R.O.C.
TEMIC Taiwan
17F–1, 76, Section 2
Tun Hwa South Road
Taipei City
Tel: 886 2 755 6108
Fax: 886 2 755 4777

Europe

Austria

SEI/Elbatex
Eitnergasse 6
1233 Wien
Tel: 43 1 8160 2215
Fax: 43 1 8160 2400

Croatia

Dolenc d.o.o.
Ivana Mazuranica 31
10290 Zagreb / Zapresic
Tel: 385 41 704 905
Fax: 385 41 702 769

Germany

Ing. Buero Rainer Koenig
Giesensdorfer Strasse 11 A
12207 Berlin
Postfach 420, PLZ 12174
Tel: 49 30 7689 090
Fax: 49 30 7689 0930

Poland

APL
ul. Mokotowska 4/6
00641 Warszawa
Tel: 48 22 256 259
Fax: 48 22 257 276

Rep. of Ireland

Memec Ireland Ltd.
Gardner House
Bank Place
Limerick
Tel: 353 61 4118 42
Fax: 353 61 4118 88

United Kingdom

BCD Microelectronics Ltd.
Swaffham Bulbeck
3 Station Road
Cambridge CB5 ONB
Tel: 44 1223 8125 98
Fax: 44 1223 8126 86

Abercorn Electronics Ltd.
Philipstown, Scotland
Pardovan, West Lothian
Linlinthgow EH49 6QZ
Tel: 44 1506 8342 22
Fax: 44 1506 8345 54

North America
USA

Alabama

Rep. Inc.
11535 Gilleland Road
Huntsville
Alabama 35803
Tel: 1 205 881 9270
Fax: 1 205 882 6692

Alaska

see Washington

Arizona

QuadRep Southern Inc.
40 W. Baseline Road, Ste.116
Tempe
Arizona 85283
Tel: 1 602 839 2102
Fax: 1 602 839 2126

Arkansas

see Texas (Arlington)

California

QuadRep Southern, Inc.
15215 Alton Parkway, Ste.200
Irvine
California 92130
Tel: 1 714 727 4222
Fax: 1 714 727 4033

QuadRep Southern Inc.
11995 El Camino Real, Ste.305
San Diego
California 92130
Tel: 1 619 755 1188
Fax: 1 619 793 9269

QuadRep North, Inc.
2635 North First Street, Ste.116
San Jose
California 95134–2009
Tel: 1 408 432 3300
Fax: 1 408 432 3428

Colorado

QuadRep Rocky Mtn. Inc.
6500 South Quebec Street,
Ste.210
Englewood
Colorado 80111
Tel: 1 303 771 6886
Fax: 1 303 771 6887

QuadRep Rocky Mtn. Inc.
19410 Rim of the World
Monument
Colorado 80132
Tel: 1 719 4889 097
Fax: 1 719 4889 312

Connecticut

see New York (Metro/L.I.)

Delaware

see New Jersey

District of Columbia

see Maryland

Florida

Naltron Corporation
Southern Office
14460 Greenbriar Place
Davie
Florida 33325
Tel: 1 305 370 9363
Fax: 1 305 370 6188

Naltron Corporation
Central Office
588 Peregrine Drive
Indialantic
Florida 32903
Tel: 1 407 777 3399
Fax: 1 407 777 2050

Rep. Inc. South
235 South Maitland, Ste.211
Maitland
Florida 32751
Tel: 1 407 628 4837
Fax: 1 407 645 0356

Naltron Corporation
110 S. W. 91 Av., Ste.206
Plantation
Florida 33324
Tel: 1 305 236 3580
Fax: 1 305 236 3581

Naltron Corporation
South
5401 W. Kennedy, Ste.1060
Tampa
Florida 33609
Tel: 1 813 287 1433
Fax: 1 813 287 1746

Naltron Corporation
4144 Waterview Loop
Winter Park
Florida 32792
Tel: 1 407 657 7003
Fax: 1 407 657 4240

Georgia

Rep. Inc.
1944 Northlake Parkway, Ste.1
Tucker
Georgia 30084
Tel: 1 404 938 4358
Fax: 1 404 938 0194

Hawaii

see California

Idaho

QuadRep Northwest
10451 West Garverdale, Ste.209
Boise
Idaho 83704
Tel: 1 208 375 9868
Fax: 1 208 323 9386

Illinois

Victory Sales
1030 W. Higgins Road, Ste.101
Hoffman Estates
Illinois (Northern) 60195
Tel: 1 847 490 0300
Fax: 1 847 490 1499

Indiana

Victory Sales
3077 East 98th Street, Ste.135
Indianapolis
Indiana 46280
Tel: 1 317 581 0880
Fax: 1 317 581 0882

Iowa

Stan Clothier Company
1930 St. Andrews NE
Cedar Rapids
Iowa 52402
Tel: 1 319 393 1576
Fax: 1 319 393 7317

Kansas

Stan Clothier Company
13000 West 87th Street Parkway,
Ste.105
Lenexa
Kansas 66215
Tel: 1 913 492 2124
Fax: 1 913 492 1855

Kentucky

see Indiana

Louisiana

see Texas (Arlington)

Maine

see Massachusetts

Maryland

Arbotek Associates, Inc.
2408 Peppermill Drive, Ste.I
Glen Burnie
Maryland 21061
Tel: 1 410 768 5355
Fax: 1 410 768 8118

Massachusetts

C&D Electronics
90 Carando Drive
Springfield
Massachusetts 01104
Tel: 1 413 781 1776
Fax: 1 413 736 8549

Technology Sales Inc.
332 Second Avenue
Waltham
Massachusetts 02154
Tel: 1 617 890 5700
Fax: 1 617 890 3913

Michigan

Victory Sales
39111 W. Six Mile Road
Livonia
Michigan 48152
Tel: 1 313 432 3147
Fax: 1 313 432 3146

Minnesota

Stan Clothier Company
9600 West 76th Street, Ste.A
Eden Prairie
Minnesota 55344
Tel: 1 612 944 3456
Fax: 1 612 944 6904

Mississippi

see Alabama

Missouri

Stan Clothier Company
3910 Old Highway 94, South
Ste.116
St. Charles
Missouri 63304
Tel: 1 314 928 8078
Fax: 1 314 447 5214

Montana

see Colorado

Nebraska

see Kansas

Nevada (Clark County)

see Arizona

Nevada (exc. Clark County)

QuadRep Sierra
987 Tahoe Blvd.
Incline Village
Nevada 89451
Tel: 1 702 832 2701
Fax: 1 702 832 2703

New Hampshire

see Massachusetts

New Jersey (Northern)

see New York (Metro/L.I.)

New Jersey (Southern)

see Pennsylvania (Eastern)

New Mexico

see Arizona

New York

Astrorep Incorporated
103 Cooper Street
Babylon
New York (Metro/L.I.)
Tel: 1 516 422 2500
Fax: 1 516 422 2504

Technology Sales, Inc.
920 Perinton Hills Office Park
Fairport
New York 14450 (Upstate)
Tel: 1 716 223 7500
Fax: 1 716 223 5526

North Carolina

Rep, Inc. #062
1026 Forest Oak Drive, Ste.204
Charlotte
North Carolina 28209
Tel: 1 704 521 9982
Fax: 1 704 521 9995

Rep. Inc.
2500 Gateway Centre Blvd.
Morisville
North Carolina 27560
Tel: 1 919 469 9997
Fax: 1 919 481 3879

North Dakota

see Minnesota

Ohio

Victory Sales Inc.
7333 Paragon Road, Suite 210
Centerville
Ohio 45458
Tel: 1 513 436 1222
Fax: 1 513 436 1224

Victory Sales
32901 Station Street, Ste.104
Solon
Ohio 44139
Tel: 1 216 498 7570
Fax: 1 216 498 7574

Oklahoma

see Texas (Arlington)

Oregon

QuadRep Northwest
17020 SW Upr. Boones Fry. Rd.
#202
Portland
Oregon 97224
Tel: 1 503 620 8320
Fax: 1 503 639 4023

Pennsylvania (Western)

see Ohio (Solon)

Pennsylvania (Eastern)

Astrorep Mid Atlantic Inc.
375 Horsham Road, Ste.200
Horsham, PA. 19044
Pennsylvania
Tel: 1 215 957 9580
Fax: 1 215 957 9583

Puerto Rico

Technology Sales, Inc.
Edificio Rali, Ste.216
San German
P.O. Box 121
Puerto Rico 00683–0121
Tel: 1 809 892 4745
Fax: 1 809 892 1128

Rhode Island

see Massachusetts

South Carolina

see North Carolina

South Dakota

see Minnesota

Tennessee

Rep. Inc.
1908 Branner Avenue
Jefferson City
P.O. Box 490
Tennessee 37760
Tel: 1 615 475 9012
Fax: 1 615 475 6340

Texas

Ion Associates, Inc.
2221 East Lamar, Ste.250
Arlington
Texas 76006
Tel: 1 817 695 8000
Fax: 1 817 695 8010

Ion Associates, Inc.
9390 Research Blvd., Ste.210
Austin
Texas 78759
Tel: 1 512 794 9006
Fax: 1 512 794 9008

Ion Associates, Inc.
20405 S.H. 249, Ste.150
Houston
Texas 77070
Tel: 1 713 376 2000
Fax: 1 713 376 2034

Utah

QuadRep Rocky Mtn. Inc.
180 South 300 West, Ste.231
Salt Lake City
Utah 84101
Tel: 1 801 521 4717
Fax: 1 801 821 4745

Vermont

see Massachusetts

Virginia

see Maryland

Washington

QuadRep Crown, Inc.
375 118th Avenue, South East,
Ste.110
Bellevue
Washington 98005–3575
Tel: 1 206 453 5100
Fax: 1 206 646 8775

West Virginia

see Maryland

Wisconsin

Victory Sales
405 North Calhoun Road,
Ste.208
Brookfield
Wisconsin 53005
Tel: 1 414 789 5770
Fax: 1 414 789 5760

Wyoming

see Colorado

Canada / South America

Ontario

Dynasty Components Inc.
1 Terence Matthews Guide
Kanata K2M293
Ontario
Tel: 1 613 599 5570
Fax: 1 613 599 5577

Brasil

Mikrotron Representacao e Consultoria S/C Ltda.
Rua Morato Coelho 798, cj.71
05417–001 Sao Paulo–SP
Tel: 55 11 814 7315
Fax: 55 11 815 8790

Venezuela

Electronica Uribe C.A.
Aptdo. de Correos
Piso 1, Oficina G Calle 3–A, L
Uribina
62621 Caracas
Tel: 58 2 241 2689
Fax: 58 2 241 0192

Asia Pacific

Australia

Consulaust International Ptv Ltd
3rd Floor, 10 Bridge Street
Granville, NSW 2142
Tel: 61 2 637 2558
Fax: 61 2 682 4521

IRH Components
1–5 Carter Street
2128 Silverwater
NSW
Tel: 61 2 364 1766
Fax: 61 2 648 3505

Consulaust International Pty. Ltd.
15 Shierlaw Avenue
Canterbury
P.O.Box 357, Camberwell
VIC
Tel: 61 3 8362 566
Fax: 61 3 8301 1764

Hong Kong

Audio Mechanical Corp. Ltd.
Ste.1701 A World Finance Centre
South Tower, Harbour City
17, Canton Road, Tsimshatsui
Kowloon
Tel: 852 2 736 8192
Fax: 852 2 735 0926

Kaolink Trading Company
Unit 12,9/F.,Kodak House,Ph. 2
39 Healthy Street East
North Point
Tel: 852 2 805 5988
Fax: 852 2 805 5922

Willias–Array Electronics Ltd.
200 Tai Lin Pai Road
Unit 1,24/F, Wyler Centre Phase 2
Kwai Chung
N.T.
Tel: 852 2 418 3700
Fax: 852 2 481 6992

India

Blue Star Limited
Blue Star House 11/A
Magarath Road
560 025 Bangalore
Tel: 91 80 558 4728
Fax: 91 80 558 4599

Blue Star Limited
Sahas 414/2
Veer Savarkar Marg
400025 Prabhadevi, Bombay
Tel: 91 22 430 6155
Fax: 91 22 430 7078

Korea

Changnam Electronics Industry
#44–22, Yoido–Dong
9th Fl., Hosung Bldg.
Seoul
Youngdeungpo–Ku
Tel: 82 2 7820 412
Fax: 82 2 7847 702

Malaysia

Scan Components (M) Sdn.Bhd.
11900 Sungei Nibong
761–B, Jalan Sultan Azlan Shah
Penang
Tel: 60 4 643 5136
Fax: 60 4 643 6320

Rep. of Singapore

QuadRep Marketing (S) Pte.Ltd.
#12–05 Parkway Builders Centre
1 Marine Parade Central
Singapore 449408
Tel: 65 346 1933
Fax: 65 346 1911

Scan Technology (S) Pte Ltd.
Jurong Industrial Estate
10 Penjuru Lane
Singapore 6091901233
Tel: 65 2 652 655
Fax: 65 2 655 200

Taiwan, R.O.C.

Uppertech Enterprise Co.,Ltd.
Hsin Tien City
6F, No 92, Pao Chung Road
Taipei
Tel: 886 2 916 1997
Fax: 886 2 914 1152

World Peace Industrial CS Ltd.(WPI)
8 F,76 Cheng Kung Road Sec.1
Nanking
Taipei
Tel: 886 2 7885 200
Fax: 886 2 7883 255

Thailand

Scan Technology (T) Pte Ltd
93/37 Modern Group Building
Chaeng Wattana Road
Pakkred Nontaburi, 11120
Tel: 662 982 9023
Fax: 662 574 6386

Europe

Austria

EBV Elektronik GmbH
Diefenbachgasse 35/6
1150 Wien
Tel: 43 1 8941 7740
Fax: 43 1 8941 775

Farnell Electronic Services
Akaziengasse 42
1234 Wien
Tel: 43 1 6945 170
Fax: 43 1 6945 10

SEI/Elbatex GmbH
Eitnergasse 6
1232 Wien
Tel: 43 1 8664 20
Fax: 43 1 8664 2201

SPOERLE Electronic GmbH
Heiligenstaedter Strasse 52
1190 Wien
Tel: 43 1 3187 2700
Fax: 43 1 3692 273

Belgium

Farnell Electronic Services
Excelsiorlaan 4A
1930 Zavantem
Tel: 32 2 7253 533
Fax: 32 2 7254 135

EBV Elektronik
Excelsiorlaan 35
1930 Zaventem
Tel: 32 2 7160 010
Fax: 32 2 7208 152

SPOERLE Electronic
Keiberg II – Minervastraat 14
1930 Zaventem
Tel: 32 2 725 4660
Fax: 32 2 725 4511

Czech Republic

SPOERLE Electronic
spol.sr.o.
Scharkovska 24
101 Praha 10
Tel: 42 2 731 354
Fax: 42 2 731 355

Denmark

EBV Elektronik
Ved Lunden 9
8230 Aabyhoj
Tel: 45 8625 0466
Fax: 45 8625 0466

AEG Industri A/S
Roskildevej 8–10
2620 Albertslund
Tel: 45 42 648 522
Fax: 45 42 643 311

Farnell Electronic Services
Smedeholm 13–19
2730 Herlev
Tel: 45 4485 7500
Fax: 45 4485 7530

SEI/Hatteland A/S
Tindbjergvej 18
8600 Silkeborg
Tel: 45 8683 6211
Fax: 45 8683 6383

Arrow–EXATEC
Mileparken 20 E
2740 Skovlunde
Tel: 45 4492 7000
Fax: 45 4492 6020

EBV Elektronik
Gladsaxevej 370
2860 Soborg
Tel: 45 3969 0511
Fax: 45 3969 0504

Finland

Arrow–Field OY
Nittyläntie 5
00620 Helsinki
Tel: 358 0 777 571
Fax: 358 0 777 3718

Farnell Electronic Services
Tyopajakatu 5
00580 Helsinki
PL 25
Tel: 358 0 4766 60
Fax: 358 0 4766 6329

SEI/Hatteland
Malminkaari 230
00700 Helsinki
Tel: 358 0351 61 521
Fax: 358 0351 61 522

France

Dimacel
63, rue Jean–Jaures
95874 Bezons Cedex
Tel: 33 1 3423 7069
Fax: 33 1 3423 7033

Arrow
Centreda
Avenue Didier Dorat
31700 Blagnac
Tel: 33 1 6115 7518
Fax: 33 1 6130 0193

EBV Elektronik
Im Lutelicum
1 Square du Chene Germain
35510 Cesson Sevigne
Tel: 33 99 3843 38
Fax: 33 99 3892 65

Arrow
Parc d'affaires Hercule
12C, rue des Landelles
35510 Cesson–Sevigne
Tel: 33 1 9941 7044
Fax: 33 1 9950 1128

EBV Elektronik
16, rue Galilee Cité Descartes
77436 Champs–sur–Marne
Tel: 33 1 6468 8600
Fax: 33 1 6468 2767

Future Electronics
Parc Technopolis
LP 854 – Les Ulis
3, Courtaboeuf du Canada, Bat.
Theta 2
91974 Courtaboeuf Cedex
Tel: 33 1 6982 1111
Fax: 33 1 6982 1100

Farnell Electronic Services
ZAC des Maisons Neuves
15, rue de Beledonne
38320 Eybens
BP 133
Tel: 33 1 7624 5261
Fax: 33 1 7662 2804

Farnell Electronic Services
Espace Technologique
BP 69 Saint Aubin
91192 Gif–Sur–Yvette Cedex
16 ZA de Coutraboeuf
Tel: 33 1 6985 8383
Fax: 33 1 6985 8399

Arrow
Les jardins d'entreprise–BatB3
213, rue de Gerland
69007 Lyon
Tel: 33 1 7872 7942
Fax: 33 1 7872 8024

SCAIB
8, rue du Repos
69007 Lyon
Tel: 33 1 7273 2127
Fax: 33 1 7869 1080

SCAIB
Chemin des Clos, ZIRST
38240 Meylan
Tel: 33 1 7690 2260
Fax: 33 1 7641 0954

SCAIB
3 ter, rue de l'hyppodrome
44300 Nantes
Tel: 33 4037 0036
Fax: 33 4037 0104

SEI/SCAIB
6 Rue Ambroise Croizat
91127 Palaiseau Cedex
Tel: 33 1 6919 8900
Fax: 33 1 6919 8920

Arrow Electronique
73/79, Rue des Solets
94663 Rungis Cedex
B.P. Silic 585
Tel: 33 1 4978 4948
Fax: 33 1 4978 0596

Farnell Electronic Services
59 Route du General de Gaulle
67300 Schiltigheim
Tel: 33 1 8862 9596
Fax: 33 1 6985 8399

Arrow
Les Delonix
138, chemin du stade
83140 Six–Fours
Tel: 33 1 9434 2323
Fax: 33 1 9474 8659

SCAIB
Rue des Charrons
31702 Toulouse
BP 57
Tel: 33 1 6171 9083
Fax: 33 1 6130 4987

EBV Elektronik
Parc Club du Moulin á Vent
33, Av. du Docteur Georges
Levy, Bat 55
69693 Venissieux Cedex
Tel: 33 1 7877 6777
Fax: 33 1 7800 8081

Farnell Electronic Services
Parc Club du Moulin Vent
33, rue du Docteur Gerard Levy
69693 Venissieux Cedex
Tel: 33 1 7278 1870
Fax: 33 1 7278 1897

SCAIB
Technoparc
23, allee Lavoisier
59650 Villeneuve d'Ascq
Tel: 33 1 2005 2903
Fax: 33 1 2005 9912

Arrow
P.A.T de Brabois–Bat B8
18, allee de la foret de la Reine
54600 Villers Les Nancy
Tel: 33 1 8344 1616
Fax: 33 1 8344 3863

Germany

SPOERLE Electronic GmbH
Kackertstrasse 10
52072 Aachen
Tel: 49 241 8896 90
Fax: 49 241 8116 2

Farnell Electronic Services GmbH
Heubergstrasse 43
72631 Aichtal
Tel: 49 7127 508 78
Fax: 49 7127 562 25

Farnell Electronic Services GmbH
Maubacher Strasse 30
71522 Backnang
Tel: 49 7191 689 31
Fax: 49 7191 689 31

Farnell Electronic Services GmbH
Bantorfer Brink 75
30890 Barsinghausen
Tel: 49 5105 5146 63
Fax: 49 5105 5140 60

EBV Elektronik GmbH
Behaimstrasse 3
10585 Berlin
Postfach 100208, PLZ 10562
Tel: 49 30 3421 041
Fax: 49 30 3419 003

Eurodis Enatechnik Electronics GmbH
Sickingenstrasse 1
10553 Berlin
Tel: 49 30 3441 043
Fax: 49 30 3449 544

Future Electronics
Luxemburger Strasse 35
11353 Berlin
Tel: 49 30 4690 890
Fax: 49 30 4690 8989

SPOERLE Electronic GmbH
Rudower Strasse 27–29
12351 Berlin
Tel: 49 30 6060 11
Fax: 49 30 6014 057

SPOERLE Electronic GmbH
Hoepfigheimer Strasse 5
74321 Bietigheim–Bissingen
Postfach 1727, PLZ 74307
Tel: 49 7142 7003 0
Fax: 49 7142 7003 60

EBV Elektronik GmbH
In der Meineworth 21
30938 Burgwedel
Postfach 1355, PLZ 30929
Tel: 49 5139 8087 0
Fax: 49 5139 5199

Eurodis Enatechnik Electronics GmbH
Rheinstrasse 24
64283 Darmstadt
Tel: 49 6151 1741 0
Fax: 49 6151 1741 11

Future Electronics Deutschland GmbH
Hauert 8
44227 Dortmund
Tel: 49 231 9750 480
Fax: 49 231 9750 823

SPOERLE Electronic GmbH
Hildebrandstrasse 13
44319 Dortmund
Postfach 130362, PLZ 44313
Tel: 49 231 218 010
Fax: 49 231 2180 167

SPOERLE Electronic GmbH
Headquarter
Max–Planck–Str. 1–3
63303 Dreieich
Postfach 102140, PLZ 63267
Tel: 49 6103 304 0
Fax: 49 6103 304 344

Eurodis Enatechnik Electronics GmbH
St. Petersburger Str. 15
01309 Dresden
Tel: 49 351 3361 304
Fax: 49 351 3361 306

EBV Elektronik GmbH
Burgstrasse 81–83
65817 Eppstein
Tel: 49 6198 5920 50
Fax: 49 6198 5920 70

Farnell Electronic Services GmbH
Fr.–Engels–Strasse 54/94
99086 Erfurt
Tel: 49 361 211 3580
Fax: 49 361 211 3580

Future Electronics Deutschland GmbH
Wilhelm–Wolff–Str.6
99099 Erfurt
Tel: 49 361 4208 70
Fax: 49 361 4208 760

Farnell Electronic Services GmbH
Am Geissberg 8
71292 Friolzheim
Tel: 49 7044 440 49
Fax: 49 7044 441 48

Farnell Electronic Services GmbH
Kurze Strasse 1
74376 Gemmrigheim
Tel: 49 7143 9439 0
Fax: 49 7143 9439 0

DLC 3
Rodeweg 18
37081 Goettingen
Postfach 3352, PLZ 37023
Tel: 49 551 904 0
Fax: 49 551 904 46748

Farnell Electronic Services GmbH
Feithstrasse 41
58095 Hagen
Tel: 49 2331 5899 40
Fax: 49 2331 5899 40

SPOERLE Electronic GmbH
Schnackenburger Allee 149
22525 Hamburg
Postfach 540824, PLZ 22508
Tel: 49 40 853 134 0
Fax: 49 40 8531 3490

Eurodis Enatechnik Electronics GmbH
Rendsburger Str. 24
30659 Hannover
Tel: 49 511 6159 70
Fax: 49 511 6159 798

Future Electronics Deutschland GmbH
Black & Decker–Strasse 17B
65510 Idstein
Tel: 49 6126 5402 0
Fax: 49 6126 5162 9

EBV Elektronik GmbH
Matthias–Claudius–Strasse 2A
41564 Kaarst
Tel: 49 2131 9677 0
Fax: 49 2131 9677 30

EBV Elektronik GmbH
Headquarter
Ammerthalstr. 28
85551 Kirchheim–Heimstetten
Tel: 49 89 9911 40
Fax: 49 89 9911 4422

Eurodis Enatechnik Electronics GmbH
Henschelring 5
85551 Kirchheim/Muenchen
Tel: 49 89 9049 820
Fax: 49 89 9049 8240

Eurodis Enatechnik Electronics GmbH
Max–Stromeyerstrasse 1
78467 Konstanz
Tel: 49 7531 6104 8
Fax: 49 7531 6726 0

Future Electronics Deutschland GmbH
Johannes–Daur–Strasse 1
70825 Korntal–Muenchingen
Tel: 49 711 8308 30
Fax: 49 711 8308 383

Farnell Electronic Services GmbH
Platanenstrasse 33
86899 Landsberg
Tel: 49 8191 229 45
Fax: 49 8191 229 45

Future Electronics
Buschkamp 84
30853 Langenhagen
Tel: 49 511 7256 20
Fax: 49 511 7256 262

EBV Elektronik GmbH
Boeblinger Strasse 13
71229 Leonberg
Tel: 49 7152 300 90
Fax: 49 7152 7595 8

Farnell Electronic Services GmbH
Othlinghauser Strasse 29A
58509 Luedenscheid
Tel: 49 2351 6340 34
Fax: 49 2351 6340 34

SPOERLE Electronic GmbH
Hauptstrasse 103
04416 Markkleeberg
Tel: 49 341 3562 20
Fax: 49 341 35622 66

Farnell Electronic Services GmbH
Stiftstrasse 14
32427 Minden
Tel: 49 571 8401 12
Fax: 49 571 8401 12

Farnell Electronic Services GmbH
Elektronik Vertrieb Headquarter
Bahnhofstrasse 44
71693 Moeglingen
Tel: 49 7141 487 0
Fax: 49 7141 487 210

Eurodis Enatechnik Electronics GmbH
Hellersberger Strasse 14
41469 Neuss
Tel: 49 2131 918 890
Fax: 49 2131 918 930

Eurodis Enatechnik Electronics GmbH
Lina–Ammon–Strasse 22
90471 Nuernberg
Tel: 49 911 8603 0
Fax: 49 911 8603 230

SPOERLE Electronic GmbH
Rathsbergstrasse 17
90411 Nuernberg
Tel: 49 911 5215 60
Fax: 49 911 5215 635

Farnell Electronic Services
GmbH
Am Saalbach 5
76661 Philipsburg
Tel: 49 7256 7878
Fax: 49 7256 7878

SPOERLE Electronic GmbH
Wernher–von–Braun–Strasse 9
85640 Putzbrunn
Tel: 49 89 4561 80
Fax: 49 89 4561 8399

Eurodis Enatechnik Electronics
GmbH Headquarter
Pascalkehre 1
25443 Quickborn
Tel: 49 4106 701 0
Fax: 49 4106 701 268

Future Electronics Deutschland
GmbH
Max–Weber–Strasse 3
25451 Quickborn
Tel: 49 4106 7102 1
Fax: 49 4106 7522 6

EPSa GmbH
Werk Saalfeld
Remschützer Strasse 1
07318 Saalfeld
Tel: 49 3671 448 150
Fax: 49 3671 448 161

Farnell Electronic Services
GmbH
Kirchroettenbach 47
91220 Schnaittach
Tel: 49 9126 39 94
Fax: 49 9126 39 95

Farnell Electronic Services
GmbH
Roemerstrasse 116
59379 Selm
Tel: 49 2592 9812 13
Fax: 49 2592 9812 13

Eurodis Enatechnik Electronics
GmbH
Dreifelder Str. 36
70599 Stuttgart
Postfach 720150, PLZ 70577
Tel: 49 711 458 960
Fax: 49 711 458 96 66

SPOERLE Electronic GmbH
Am Gansacker 10
79224 Umkirch
Postfach 1143, PLZ 79220
Tel: 49 7665 9855 0
Fax: 49 7665 9855 98

Future Electronics Deutschland
GmbH
Headquarter–D
Muenchner Strasse 18
85774 Unterfoehring
Tel: 49 89 9572 70
Fax: 49 89 9572 7205

Farnell Electronic Services
GmbH
Saphirweg 14
71665 Vaihingen
Tel: 49 7042 920 17
Fax: 49 7042 920 17

Farnell Electronic Services
GmbH
Finkenweg 7
38159 Vechelde
Tel: 49 5302 840 112
Fax: 49 5302 840 112

Farnell Electronic Services
GmbH
Hansjakobweg 7
75045 Walzbachtal
Tel: 49 7203 5278
Fax: 49 7203 5278

Greece

P. Caritato & Associates S.A.
31 Ilia Iliou
Athens 11743
Tel: 30 1 9020 115
Fax: 30 1 9017 024

EBV Elektronik
1, Anaxagora Str.
17778 Tavros
Tel: 30 1 3414 300
Fax: 30 1 3414 304

Hungary

SPOERLE Elektronik
Vaci ut 45
1134 Budapest
Tel: 36 1 270 1333

Italy

Farnell Electronic Services
Viale Milanofiori, E/5
20094 Assago (Milano)
Tel: 39 2 8247 01
Fax: 39 2 8242 631

Sonelco S.P.A.
Via Monfalcone 15
20092 Cinisello Balsamo (MI)
Tel: 39 2 6602 61
Fax: 39 2 6601 1295

EBV Elektronik S.R.L.
Via C. Frova 34
20092 Cinisello Balsamo (Mil)
Tel: 39 2 6609 61
Fax: 39 2 6601 7020

Avnet EMG S.R.L.
Centro Direzionale–Via Novara
570
20153 Milano
Tel: 39 2 38103 100
Fax: 39 2 38002 988

Lasi Elettronica S.P.A.
Div.Della Silverstar Ltd.
Viale Fulvio Testi 280
20126 Milano
Tel: 39 2 6614 31
Fax: 39 2 6610 1385

Vector Electronic S.R.L.
Via Cialdini 37
20161 Milano
Tel: 39 2 6624 011
Fax: 39 2 6620 2851

CO. V. EL S.R.L
(TFK only)
Via Vittorio Veneto 82
35013 Tombolo (PD)
Tel: 39 49 9470 970
Fax: 39 49 9471 018

Cecchi Gianni
Via F.LLI.Carli 32
50060 Molino Del Piano (FI)
Firenze
Tel: 39 55 8364 059
Fax: 39 55 8364 061

Netherlands

EBV Elektronik
Planetenbaan 2
3606 AK Maarssenbroek
Tel: 31 3465 623 53
Fax: 31 3465 642 77

SPOERLE Electronic
Coltbaan 17
3439 NG Nieuwegein
Tel: 31 3402 912 34
Fax: 31 3402 359 24

Farnell
Chroomstraat 28
2718 RH Zoetermeer
PB 345
Tel: 31 7961 3161
Fax: 31 7961 3169

SPOERLE Electronic
Eindhoven
De Run 1120
5503 LA Veldhoven
Tel: 31 402 545 430
Fax: 31 402 535 540

Norway

Jakob Hatteland Electronic AS
SEI
5578 Nedre Vats
Tel: 47 5376 3000
Fax: 47 5376 5339

Arrow–Tahonic AS
Sagveien 17
0404 Oslo
4554 Torshov
Tel: 47 22 3784 40
Fax: 47 22 3707 20

Farnell Electronic Services
Karihaugen 89
1001 Oslo
120 Foroset
Tel: 47 22 3212 70
Fax: 47 22 3251 20

Poland

Semicond S.C.
ul. Nateczowska 35
02–922 Warszawa
Tel: 48 22 651 9828
Fax: 48 22 651 9827

SPOERLE Elektroni
Polska Sp.z.o.o.
ul. Domaniewska 41
02–672 Warszawa
Tel: 48 22 6400 447
Fax: 48 22 6400 348

Portugal

ADM Electronica s/a
Sonepar Branch Office
En 107,No.743,Ardegaes,Aguas
Santas
4445 Ermesinde
Tel: 351 2 9736 957
Fax: 351 2 9736 958

Slovenia

EBV Elektronik
Dunajska 22/9
1511 Ljubljana
Tel: 386 61 1330 216
Fax: 386 61 1330 457

Spain

EBV Elektronik
Calle Paris, 71
08029 Barcelona
Tel: 34 93 4108 533
Fax: 34 93 4190 825

EBV Elektronik
Calle Maria Tubau 6
28049 Madrid
Tel: 34 1 3588 608
Fax: 34 1 3589 430

SEI/ADM electronica s/a
Head Office
Tomas Breton, 50 30 2
28045 Madrid
Tel: 34 1 5304 121
Fax: 34 1 5300 164

EBV Elektronik
Centro Empresarial Euronova
Ronda de Poniente 4
28760 Tres Cantos Madrid
Tel: 34 1 8043 256
Fax: 34 1 8044 103

Sweden

Farnell Electronic Services
Ankdammsgatan 32
17126 Solna
Box 1330
Tel: 46 8 8300 20
Fax: 46 8 2713 03

Arrow – TH's AB
Arrendevagen 36
16303 Spanga
Box 3027
Tel: 46 8 3629 70
Fax: 46 8 7613 065

SEI/Hatteland
Gunnebogatan 30
16303 Spanga
Box 3009
Tel: 46 8 7600 140
Fax: 46 8 3646 86

Switzerland

EBV Elektronik
Vorstadtstrasse 37
8953 Dietikon
Tel: 41 1 745 6161
Fax: 41 1 741 5110

EBV Elektronik
10 Passage St. Francois
1003 Lausanne
Tel: 41 21 3112 804
Fax: 41 21 3112 807

SPOERLE Electronic
En Chamard
1442 Montagny p/–Yverdon
Tel: 41 24 270 100
Fax: 41 24 245 245

Fabrimex Spoerle
Cherstrasse 4
8152 Opfikon–Glattbrugg
Tel: 41 1 8746 262
Fax: 41 1 8746 200

Farnell Electronic Services
Brandschenkestrasse 178
8027 Zuerich
Tel: 41 1 2046 111
Fax: 41 1 2046 311

United Kingdom

Micromark Electronics Ltd.
Maidenhead
159 Boyn Valley Road
Berkshire SL6 4EG
Tel: 44 1628 7617 6
Fax: 44 1628 7837 99

Eltek Semiconductors
Nelson Road Industrial Estate
Dartmouth, Devon TQ6 9LA
Tel: 44 803 834 455
Fax: 44 803 833 011

Farnell Electronic Services
Edinburgh Way
Harlow, Essex, CM20 2DF
Tel: 44 1279 626 777
Fax: 44 1279 441 687

Farnell Electronic Components
Armley Road
Leeds, West Yorkshire,LS12
2QQ
Tel: 44 0113 2790 101
Fax: 44 0113 2633 404

Abacus Polar
Cherrycourt Way
Leighton Buzzard
Bedfordshire LU7 8YY
Tel: 44 1525 5850 00
Fax: 44 1525 8580 01

Future Electronics Ltd.
Headquarter–UK
Future House, Poyle Road
Colnbrook
Berkshire SL3 OEZ
Tel: 44 1753 6870 0
Fax: 44 1753 6891 00

Macro Group
Burnham Lane
Slough
Berkshire SL1 6LN
Tel: 44 1628 6043 83
Fax: 44 1628 6668 73

Eurodis HB Electronics
Lever Street
Bolton
BL3 6BJ
Tel: 44 1204 555 000
Fax: 44 1204 384 911

EBV Electronics
4/5 Market Square
Marlow
Buckinghamshire
Tel: 44 1438 4887 11
Fax: 44 1438 4887 22

2001
Stevenage Business Park, Pin
Green
Stevenage
Hertfordshire SG1 4SU
Tel: 44 1438 7420 01
Fax: 44 1438 7420 02

Africa / Middle East

Rep. of South Africa

Electrolink (PTY) Ltd.
Fleetway House
Martin Hammerschlag Way
Cape Town 8000
P.O. Box 1020
Tel: 27 21 2153 50
Fax: 27 21 4196 256

Israel

Tritech Ltd.
Ind. Zone
4, Hayetzira Street
43100 RA'ANANA
P.O. Box 2436
Tel: 972 9 917 277
Fax: 972 9 982 616

Turkey

EBV Elektronik
Perdemsac Plaza
Bayar Cad.Gulbahar Sok.No 17
K:13, D:131–132 Kozyatagi
Istanbul
Tel: 90 216 463 1352
Fax: 90 216 463 1355

EMPA
Besyol Lowdra Asfalti
Florya Is Merkezi No.5,Kat:3
34630 Sefaköy–Istanbul
Tel: 90 212 599 3050
Fax: 90 212 599 3059

North America / Canada

USA

Alabama

All American
4950 Corporate Dr., Ste.115D
Huntsville
Alabama 35816
Tel: 1 205 837 1555
Fax: 1 205 837 7733

Anthem Electronics
4920–H Corporate Drive
Huntsville
Alabama 35805
Tel: 1 205 890 0302
Fax: 1 205 890 0130

Future Electronics Corp.
1825 University Square, Ste.12
Huntsville
Alabama 35816
Tel: 1 205 830 2322
Fax: 1 205 830 6664

Hamilton/Hallmark–#23
4890 University Square, Ste.1
Huntsville
Alabama 35816
Tel: 1 205 837 8700
Fax: 1 205 830 8404

Marshall Industries
3313 Memorial Pkwy. South,
Ste.150
Huntsville
Alabama 35801
Tel: 1 205 881 9235
Fax: 1 205 881 1490

Pioneer Tech.
4835 University Square, Ste.5
Huntsville
Alabama 35816
Tel: 1 205 837 9300
Fax: 1 205 837 9358

Arizona

Future Electronics Corp.
4636 East University Drive,
Ste.245
Phoenix
Arizona 85034
Tel: 1 602 968 7140
Fax: 1 602 968 0334

Marshall Industries
9831 South 51st Street, Ste.C108
Phoenix
Arizona 85044
Tel: 1 602 496 0290
Fax: 1 602 893 9029

Pioneer–Standard Electronics
4908 E. McDowell Rd.,Ste.103
Phoenix
Arizona 85008
Tel: 1 602 231 6400
Fax: 1 602 231 8877

Bell Industries
10611 N. Hayden Rd.
Scottsdale
Arizona 85260
Tel: 1 602 905 2355
Fax: 1 602 905 2356

Anthem Electronics
1555 West 10th Place, Ste.101
Tempe
Arizona 85281
Tel: 1 602 966 6600
Fax: 1 602 966 4826

Hamilton/Hallmark
1626 South Edward Drive
Tempe
Arizona 85281
Tel: 1 800 332 8638
Fax: 1 800 257 0568

California

Future Electronics Corp.
27489 West Agoura Road,
Ste.300
Agoura Hills
California 91301
Tel: 1 818 865 0040
Fax: 1 818 865 1340

Pioneer Std.
5126 Clareton Drive, Ste.160
Agoura Hills
California 91301
Tel: 1 818 865 580
Fax: 1 818 865 5814

All American
26010 Mureau Rd., Ste.120
Calabasas
California 91302
Tel: 1 818 878 0555
Fax: 1 818 878 1603

Marshall Industries
26637 Agoura Road
Calabasas
California 91302–1959
Tel: 1 818 878 7000
Fax: 1 818 880 6846

Anthem Electronics
9131 Oakdale Avenue
Chatsworth
California 91311
Tel: 1 818 775 1333
Fax: 1 818 775 1302

Hamilton Corporate
10950 West Washington Blvd.
Culver City
California 90230
Tel: 1 310 558 2000
Fax: 1 310 558 2076

All American
10805 Holder Str., Ste.100
Cypress
California 90630
Tel: 1 714 229 8600
Fax: 1 714 229 8300

Marshall Corporate
9320 Telstar Avenue
El Monte
California 91731
Tel: 1 818 307 6000
Fax: 1 818 307 6297

Anthem Electronics
1 Oldfield Drive
Irvine
California 92718–2809
Tel: 1 714 768 4444
Fax: 1 714 768 6456

Bell Industries
220 Technology Drive, Ste.100
Irvine
California 92718
Tel: 1 714 727 4500
Fax: 1 714 453 4610

Future Electronics Corp.
25B Technology Drive, Ste.200
Irvine
California 92718
Tel: 1 714 453 1515
Fax: 1 714 453 1226

Hamilton/Hallmark
140 Technology DR #400
Irvine
California 92718–2401
Tel: 1 714 789 4102
Fax: 1 714 789 4122

Marshall Industries
1 Morgan
Irvine
California 92718
Tel: 1 714 859 5050
Fax: 1 714 581 5255

Pioneer Std.
217 Technology Drive, Ste.110
Irvine
California 92718
Tel: 1 714 753 5090
Fax: 1 714 753 5589

Zeus Electronics
6 Cromwell, Ste.100
Irvine
California 92718
Tel: 1 714 581 4622
Fax: 1 714 454 4355

Bell Industries Corporate
11812 San Vincente
Blvd.,Ste.300
Los Angeles
California 90049
Tel: 1 310 826 2355
Fax: 1 310 826 1534

Marshall Industries
336 Los Coches Street
Milpitas
California 95035
Tel: 1 408 942 4600
Fax: 1 408 262 1224

Marshall Industries
3039 Kilgore Avenue, Ste.140
Rancho Cordova
California 95670
Tel: 1 916 635 9700
Fax: 1 916 635 6044

JAN Devices
6925 Canby, Bldg. 109
Reseda
California 91335
Tel: 1 818 757 2000
Fax: 1 818 708 743

Anthem Electronics
580 Menlo Drive, Ste.8
Rocklin
California 95765
Tel: 1 916 624 9744
Fax: 1 916 624 9750

Hamilton/Hallmark–#35
580 Menlo Drive, Ste.2
Rocklin
California 95765
Tel: 1 916 624 9781
Fax: 1 916 961 0922

Bell Industries
3001 Douglas Boulevard,
Suite#205
Roseville
California 95661
Tel: 1 916 781 8070
Fax: 1 916 781 2954

Future Electronics Corp.
755 Sunrise Avenue, Ste.150
Roseville
California 95661
Tel: 1 916 783 7877
Fax: 1 916 783 7988

All American
6390 Greenwich Dr., Ste.170
San Diego
California 92122
Tel: 1 619 658 0200
Fax: 1 619 658 0201

All American Semiconductor
5625 Ruffin Road, Ste.200
San Diego
California 92123
Tel: 1 619 268 1505
Fax: 1 619 268 3836

Anthem Electronics
9369 Carroll Park Drive
San Diego
California 92121
Tel: 1 619 453 9005
Fax: 1 619 546 7893

Bell Industries
5520 Ruffin Road, Ste.209
San Diego
California 92123
Tel: 1 619 576 3924
Fax: 1 619 492 9826

Future Electronics Corp.
5151 Shoreham Place, Ste.220
San Diego
California 92122
Tel: 1 619 625 2800
Fax: 1 619 625 2810

Hamilton/Hallmark–#02
4545 Viewridge Avenue
San Diego
California 92123
Tel: 1 619 571 7540
Fax: 1 619 277 6136

Marshall Industries
5961 Kearny Villa Road
San Diego
California 92123
Tel: 1 619 627 4140
Fax: 1 619 627 4163

Pioneer
9449 Balboa Ave., Ste.114
San Diego
California 92123
Tel: 1 619 514 7700
Fax: 1 619 514 7799

All American
230 Devcon Drive
San Jose
California 95112
Tel: 1 408 441 1300
Fax: 1 408 437 8984

All American Semiconductor
230 Devcon Dr.
San Jose
California 95112
Tel: 1 408 437 4624
Fax: 1 408 943 1393

Anthem Electronics
1160 Ridder Park Drive
San Jose
California 95131
Tel: 1 408 453 1200
Fax: 1 408 441 4504

Future Electronics Corp.
2220 O'Toole Avenue
San Jose
California 95131–1326
Tel: 1 408 434 1122
Fax: 1 408 433 0822

Hamilton/Hallmark–#03
2105 Lundy Avenue
San Jose
California 95131
Tel: 1 408 435 3500
Fax: 1 408 435 3720

Pioneer Tech.
333 River Oaks Parkway
San Jose
California 95134
Tel: 1 408 954 9100
Fax: 1 408 954 9113

Zeus Electronics
6276 San Ignacio Avenue, Ste.E
San Jose
California 95119
Tel: 1 408 629 4789
Fax: 1 408 629 4792

Taitron
25202 Anza Drive
Santa Clarita
California 91355–3496
Tel: 1 805 257 6060
Fax: 1 805 257 6415

Bell Industries
1161 North Fairoaks Avenue
Sunnyvale
California 94089
Tel: 1 408 734 8570
Fax: 1 408 734 8875

All American Semiconductor
369 Van Ness Way, Ste.701
Torrance
California 90501
Tel: 1 310 320 0240
Fax: 1 310 320 2707

Bell Industries
125 Auburn Court
Westlake Village
California 91362
Tel: 1 805 373 5600
Fax: 1 805 496 7340

Hamilton/Avnet–#48/01
21150 Califa Street
Woodland Hills
California 91367
Tel: 1 818 594 0404
Fax: 1 818 594 8234

Colorado

Marshall Industries
4680 Edison, Ste.D
Colorado Springs
Colorado 80915
Tel: 1 719 573 0904
Fax: 1 719 573 0103

Pioneer
5600 Green Wood Plaza Blvd., Ste.201
Denver
Colorado
Tel: 1 303 773 8090
Fax: 1 303 773 8194

Anthem Electronics
373 Inverness Drive South
Englewood
Colorado 80112
Tel: 1 303 790 4500
Fax: 1 303 790 4532

Hamilton/Hallmark–#06
12503 East Euclid Drive, Ste.20
Englewood
Colorado 80111
Tel: 1 303 799 7800
Fax: 1 303 790 4991

Future Electronics Corp.
12600 West Colfax Avenue, Ste.B110
Lakewood
Colorado 80215
Tel: 1 303 232 2008
Fax: 1 303 232 2009

Bell Industries
9351 Grant Street, Ste.460
Thornton
Colorado 80229
Tel: 1 303 691 9270
Fax: 1 303 691 9036

Marshall Industries
12351 North Grant Street, Ste.A
Thornton
Colorado 80241
Tel: 1 303 451 8444
Fax: 1 303 457 2899

Added Value/All American
4090 Youngfield Street
Wheat Ridge
Colorado 80033
Tel: 1 303 422 1701
Fax: 1 303 422 2529

Connecticut

Future Electronics Corp.
Westgate Office Center
700 West Johnson Avenue
Cheshire
Connecticut 06410
Tel: 1 203 250 0083
Fax: 1 203 250 0081

Hamilton/Hallmark–#21
125 Commerce Court, Unit 6
Chesire
Connecticut 06410
Tel: 1 203 271 2844
Fax: 1 203 272 1704

All American
100 Mill Plain Road, Ste.360
Danbury
Connecticut 06811
Tel: 1 203 791 3818

Bell Industries
1064 East Main Street
Meriden
Connecticut 06413
Tel: 1 203 639 6000
Fax: 1 203 639 6005

Pioneer Std.
2 Trap Falls Road
Shelton
Connecticut 06484
Tel: 1 203 929 5600
Fax: 1 203 929 9791

Marshall Industries
Barnes Industrial Park
20 Sterling Drive
Wallingford
Connecticut 06492
Tel: 1 203 265 3822
Fax: 1 203 284 9285

Anthem Electronics
61 Mattatuck Heights Road
Waterbury, CT 06705
Connecticut 06705
Tel: 1 203 575 1575
Fax: 1 203 575 3232

Florida

Future Electronics Corp.
237 S. Westmonte Dr., Ste.307
Altamonte Spring
Florida 32714
Tel: 1 407 865 7900
Fax: 1 407 865 7660

Anthem Electronics
598 South Northlake Blvd.#1024
Altamonte Springs
Florida 32701
Tel: 1 407 831 0007
Fax: 1 407 831 6990

Bell Industries
650 South Northlake Blvd., Ste.400
Altamonte Springs
Florida 32701
Tel: 1 407 339 0078
Fax: 1 407 339 0139

Marshall Industries
650 South Northlake Blvd., Ste.1024
Altamonte Springs
Florida 32701
Tel: 1 407 767 8585
Fax: 1 407 767 8676

All American
14450 46th St., No. Ste.116
Clearwater
Florida 34622
Tel: 1 813 532 9800
Fax: 1 813 538 5567

Anthem Electronics
13575 58th St.N.Ste.122
Clearwater
Florida 34620
Tel: 1 813 538 4157
Fax: 1 813 538 4158

All American Semiconductor
1400 East Newport Center
Dr.Ste.205
Deerfield Beach
Florida 33442
Fax: 1 954 429 0391

Future Electronics Corp.
1400 E. Newport Center
Dr.,Ste.200
Deerfield Beach
Florida 33442
Tel: 1 305 426 4043
Fax: 1 305 426 3939

Pioneer Tech.
674 South Military Trail
Deerfield Beach
Florida 33442
Tel: 1 305 428 8877
Fax: 1 305 481 2950

Anthem Electronics
5450 N.W. 33Rd Ave,Ste.101
Fort Lauderdale
Florida 33309
Tel: 1 305 484 0990
Fax: 1 305 484 0951

Hamilton/Hallmark–#17
3350 North West 53rd Avenue,
Ste.105
Fort Lauderdale
Florida 33309
Tel: 1 305 484 5482
Fax: 1 305 484 4740

Marshall Industries
2700 West Cypress Creek Road,
Ste.D114
Fort Lauderdale
Florida 33309
Tel: 1 305 977 4880
Fax: 1 305 977 4887

Zeus Components
37 Skyline Drive, Bldg. D,
Ste.3101
Lake Mary
Florida 32746
Tel: 1 407 333 3055
Fax: 1 407 333 9681

Future Electronics Corp.
2200 Tall Pines Drive, Ste.108
Largo
Florida 34641
Tel: 1 813 530 1222
Fax: 1 813 538 9598

Hamilton/Hallmark–#25
10491 77th Street North
Largo
Florida 34647
Tel: 1 813 541 7440
Fax: 1 813 544 4394

All American Semiconductor
16085 N.W. 52nd Avenue
Miami
Florida 33014
Tel: 1 305 621 8282
Fax: 1 305 620 7831

Marshall Industries
2840 Scherer Drive, Ste.410
St. Petersburg
Florida 33716
Tel: 1 813 573 1399
Fax: 1 813 573 0069

Future Electronics Corp.
1435 Market Street
Tallahassee
Florida 32312
Tel: 1 904 668 7772
Fax: 1 904 668 0856

Reptron
(TFK only)
14401 McCormick Drive
Tampa
Florida
Tel: 1 813 854 2351
Fax: 1 813 854 1324

Georgia

Anthem Electronics
3305 Breckinridge, Ste.108
Duluth
Georgia 30136
Tel: 1 770 931 3900
Fax: 1 770 931 3902

Hamilton/Hallmark–#76
3425 Corporate Way, Ste.A
Duluth
Georgia 30136
Tel: 1 404 623 4400
Fax: 1 404 476 3043

Pioneer Std.
4250C Rivergreen Pkwy.
Duluth
Georgia 30136
Tel: 1 770 623 1003
Fax: 1 770 623 0665

All American
6875 Jimmy Carter
Blvd.,Ste.3100
Norcross
Georgia 30071
Tel: 1 770 441 7500
Fax: 1 770 441 3660

Bell Industries
3020 Business Park Drive, Ste.D
Norcross
Georgia 30071
Tel: 1 404 446 7167
Fax: 1 404 446 7264

Future Electronics Corp.
3150 Holcomb Bridge Road,
Ste.130
Norcross
Georgia 30071
Tel: 1 404 441 7676
Fax: 1 404 441 7580

Marshall Industries
5300 Oakbrook Pkwy., Ste.140
Norcross
Georgia 30093
Tel: 1 404 923 5750
Fax: 1 404 923 2743

Future Electronics Corp.
12438 W. Bridgen Street
Boise
Idaho 83713
Tel: 1 208 376 8080
Fax: 1 208 376 6168

Idaho

QuadRep Crown, Inc. #010
10451 W. Garverdale, Ste.209
Boise
Idaho 83704
Tel: 1 208 375 9868
Fax: 1 208 323 9386

Illinois

Pioneer Std.
2171 Executive Drive, Ste.200
Addison
Illinois 60101
Tel: 1 708 495 9680
Fax: 1 708 495 9831

Hamilton/Hallmark–#10
3030 Salt Creek Lane, Ste.300
Arlington Heights
Illinois 60005
Tel: 1 708 797 7361
Fax: 1 708 797 7724

Bell Industries
870 Cambridge Drive
Elk Grove Village, IL 60007
Illinois 60007
Tel: 1 708 640 1910
Fax: 1 708 640 1928

Future Electronics Corp.
3150 West Higgins Road,
Ste.160
Hoffman Estates
Illinois 60195
Tel: 1 708 882 1255
Fax: 1 708 490 9290

Victory Sales #067
405 N. Calhoun Road, Ste.208
Hoffman Estates
Illinios 60195
Tel: 1 708 490 0300
Fax: 1 708 490 1499

All American
1989 University Lane
Lisle
Illinois 60532
Tel: 1 708 852 7708
Fax: 1 708 852 7791

Zeus Electronics
1140 West Thorndale Avenue
Itasca
Illinois 60143
Tel: 1 708 595 9730
Fax: 1 708 595 9896

All American
1930 N. Thoreau Dr., Ste.200
Schaumburg
Illinois 60173
Tel: 1 708 303 1995
Fax: 1 708 303 1996

Anthem Electronics
1300 Remington Road,Ste.A
Schaumburg
Illinois 60173
Tel: 1 708 884 0200
Fax: 1 708 884 0480

Marshall Industries
50 East Commerce Drive, Unit I
Schaumburg
Illinois 60173
Tel: 1 708 490 0155
Fax: 1 708 490 0569

Indiana

Hamilton Hallmark–#28
655 W. Carmel Drive, Ste.160
Carmel
Indiana 46032–2500
Tel: 1 317 872 8875
Fax: 1 317 876 7165

Bell Industries
525 Airport North Office Park
Fort Wayne
Indiana 46803
Tel: 1 219 422 4300
Fax: 1 219 423 3420

Bell Industries
5230 West 79th Street
Indianapolis
P.O. Box 6885
Indiana 46268
Tel: 1 317 875 8200
Fax: 1 317 875 8219

Future Electronics Corp.
8425 Woodfield Crossing
Indianapolis
Indiana 46240
Tel: 1 317 469 0447
Fax: 1 317 469 0448

Marshall Industries
6990 Corporate Drive
Indianapolis
Indiana 46278
Tel: 1 317 388 9069
Fax: 1 317 297 2787

Pioneer Std.
9350 North Priority Way West Drive
Indianapolis
Indiana 46240
Tel: 1 317 573 0880
Fax: 1 317 573 0979

Iowa

Hamilton/Hallmark–#44
2335–A Blairsferry North East
Cedar Rapids
Iowa 52402
Tel: 1 319 393 0033
Fax: 1 319 393 7050

Kansas

Anthem Electronics
13820 Santa Fee Trail Drive,Ste.109
Lenexa
Kansas 66215
Tel: 1 913 599 1528
Fax: 1 913 599 1325

Marshall Industries
10413 West 84th Terrace
Lenexa
Kansas 66214
Tel: 1 913 492 3121
Fax: 1 913 492 6205

Future Electronics Corp.
8826 Santa Fee Drive, Ste.150
Overland Park
Kansas 66212
Tel: 1 913 649 1531
Fax: 1 913 649 1786

Hamilton/Hallmark–#58
9200 Indian Greek Pkwy.Ste.200
Overland Park
Kansas 66210
Tel: 1 913 663 7900
Fax: 1 913 663 7979

Kentucky

Hamilton/Hallmark
1847 Mercer Road, Ste.G
Lexington
Kentucky 40511–1001
Tel: 1 606 259 1475
Fax: 1 606 288 4936

Maryland

All American
14636 Rothgeb Drive
Rockville
Maryland 20850
Tel: 1 301 251 1205
Fax: 1 301 251 8574

Anthem Electronics
7168A Columbia Gateway Drive
Columbia
Maryland 21046
Tel: 1 410 995 6640
Fax: 1 410 290 9862

Bell Industries
8945 Guilford Road, Ste.130
Columbia
Maryland 21046
Tel: 1 410 290 5100
Fax: 1 410 290 8006

Future Electronics Corp.
6716 Alexander Bell Drive, Ste.101
Columbia
Maryland 21046
Tel: 1 410 290 0600
Fax: 1 410 290 0328

Hamilton/Hallmark–#12
71347 Gateway Drive, Ste.100
Columbia
Maryland 21045
Tel: 1 410 720 3400
Fax: 1 410 720 3434

Marshall Industries
9130B Guilford Road
Columbia
Maryland 21046
Tel: 1 410 880 3030
Fax: 1 410 880 3232

Pioneer Tech.
15810 Gaither Drive
Gaithersburg
Maryland 20877
Tel: 1 301 921 3826
Fax: 1 301 921 3858

Pioneer Tech.
9100 Gaither Road
Gaithersburg
Maryland 20877
Tel: 1 301 921 0660
Fax: 1 301 921 4255

All American Semiconductor
14636 Rothgeb Drive
Rockville
Maryland 20850
Tel: 1 301 251 1205
Fax: 1 301 251 8754

Massachusetts

Bell Industries
100 Burtt Road, Ste.106
Andover
Massachusetts 01810
Tel: 1 508 474 8880
Fax: 1 508 474 8902

All American
19A Crosby Drive
Bedford
Massachussets 01730
Tel: 1 617 275 8888
Fax: 1 617 275 1982

Future Electronics Corp.
41 Main Street
Bolton
Massachusetts 01740
Tel: 1 508 779 3000
Fax: 1 508 779 5143

Pioneer Std.
44 Hartwell Avenue
Lexington
Massachusetts 02173
Tel: 1 617 861 9200
Fax: 1 617 863 1547

Hamilton/Hallmark–#18
10D Centennial Drive
Peabody
Massachusetts 01960
Tel: 1 508 532 3701
Fax: 1 508 532 9802

Anthem Electronics
200 Research Drive
Wilmington
Massachusetts 01887
Tel: 1 508 657 5170
Fax: 1 508 657 6008

Marshall Industries
33 Upton Drive
Wilmington
Massachusetts 01887
Tel: 1 508 658 0810
Fax: 1 508 657 5931

Zeus Electronics
25 Upton Drive
Wilmington
Massachusetts 01877
Tel: 1 508 658 4776
Fax: 1 508 694 2199

Michigan

Future Electronics Corp.
4505 Broadmoor South East
Grand Rapids
Michigan 49512
Tel: 1 616 698 6800
Fax: 1 616 698 6821

Anthem Electronics
39111 W.Six Mile Road, Ste.160
Livonia
Michigan 48152
Tel: 1 313 591 3218
Fax: 1 313 591 6381

Future Electronics Corp.
Celeste Doerwald
35200 Schoolcraft Road, Ste.106
Livonia
Michigan 48150
Tel: 1 313 261 5270
Fax: 1 313 261 8175

Marshall Industries
31067 Schoolcraft Road
Livonia
Michigan 48150
Tel: 1 313 525 5850
Fax: 1 313 525 5855

Hamilton Hallmark–#67
44191 Plymouth Oaks Blvd.,Ste.1300
Plymouth
Michigan 48170–2585
Tel: 1 313 416 5800
Fax: 1 313 416 4106

Pioneer Std.
44190 Plymouth Oaks Drive
Plymouth
Michigan 48270
Tel: 1 313 416 2157
Fax: 1 313 416 2415

Pioneer Std.
4467 Byron Center Road
Wyoming
Michigan 49509
Tel: 1 616 534 0500
Fax: 1 616 534 3922

Minnesota

Hamilton/Hallmark–#63
9401 James Avenue South, Ste.140
Bloomington
Minnesota 55341
Tel: 1 612 881 2600
Fax: 1 612 881 9461

Anthem Electronics
7690 Golden Triangle Drive
Eden Prairie
Minnesota 55344
Tel: 1 612 944 5454
Fax: 1 612 944 3045

Future Electronics Corp.
10025 Valley View Road,
Ste.196
Eden Prairie
Minnesota 55344
Tel: 1 612 944 2200
Fax: 1 612 944 2520

Pioneer Std.
7625 Golden Triangle Drive
Eden Prairie
Minnesota 55344
Tel: 1 612 944 3355
Fax: 1 612 944 3794

All American
7716 Golden Triangle Drive
Eden Prairie
Minnesota 55344
Tel: 1 612 944 2151
Fax: 1 612 944 9803

Marshall Industries
14800, 28th. Avenue North,
Ste.175
Minneapolis
Minnesota 55447
Tel: 1 612 559 2211
Fax: 1 612 559 8321

Missouri

Hamilton/Hallmark–#05
3783 Rider Trail South
Earth City
Missouri 63045
Tel: 1 314 291 5350
Fax: 1 314 770 6363

Marshall Industries
514 Earth City Expressway,
Ste.131
Earth City
Missouri 63045
Tel: 1 314 770 1749
Fax: 1 314 770 1486

Future Electronics Corp.
12125 Woodcrest Executive
Drive, Ste.220
St. Louis
Missouri 63141
Tel: 1 314 469 6805
Fax: 1 314 469 7226

New Hampshire

see Massachusetts

New Hampshire

see Massachusetts

New Jersey

Hamilton/Hallmark–#14
One Keystone Avenue
Cherry Hill
New Jersey 08003
Tel: 1 609 424 0100
Fax: 1 609 751 2509

Bell Industries
271 Route 46 West,
Ste.F202–203
Fairfield
New Jersey 07004
Tel: 1 201 227 6060
Fax: 1 201 227 2626

Marshall Industries
101 Fairfield Road
Fairfield
New Jersey 07006
Tel: 1 201 882 0320
Fax: 1 201 882 0095

Pioneer Std.
14 A Madison Road
Fairfield
New Jersey 07006
Tel: 1 201 575 3510
Fax: 1 201 575 3454

Future Electronics Corp.
12 East Stow Road, Ste.200,
Bldg. 12
Marlton
New Jersey 08053
Tel: 1 609 596 4080
Fax: 1 609 596 4266

Bell Industries
158 Gaither DR Ste.110
Mount Laurel
New Jersey 08054–1716
Tel: 1 609 439 8860
Fax: 1 609 439 9009

Marshall Industries
158 Gaither Drive, Unit 100
Mt. Laurel
New Jersey 08054
Tel: 1 609 234 9100
Fax: 1 609 778 1819

Future Electronics Corp.
1259 Route 46 East
Parsippany
New Jersey 07054
Tel: 1 201 299 0400
Fax: 1 201 299 1377

Anthem Electronics
26 Chapin Road
Pine Brook
New Jersey 07058
Tel: 1 201 227 7960
Fax: 1 201 227 9246

All American
245–D Clifton Avenue
West Berlin
New Jersey 08091
Tel: 1 609 768 6767
Fax: 1 609 768 3649

New Mexico

Hamilton/Hallmark–#22
NE–Bldg. 2, Ste.102
7801 Academy Road
Albuquerque
New Mexico 87109–3147
Tel: 1 505 345 0001
Fax: 1 505 828 0360

New York

Pioneer Std.
1249 Upper Front Street, Ste.201
Binghamton
New York 13901
Tel: 1 607 722 9300
Fax: 1 607 722 9562

Marshall Industries
100 Marshall Drive
Endicott
New York 13760
Tel: 1 607 785 2345
Fax: 1 607 785 5546

Pioneer Std.
840 Fairport Park
Fairport
New York 14450
Tel: 1 716 381 7070
Fax: 1 716 381 5955

All American
275B Marcus Boulevard
Hauppauge
New York 11788
Tel: 1 516 434 9000
Fax: 1 516 434 9394

Future Electronics Corp.
801 Motor Parkway
Hauppauge
New York 11788
Tel: 1 516 234 4000
Fax: 1 516 234 6183

Hamilton Hallmark–#20
390 Rabro Dr.
Hauppauge
New York 11788
Tel: 1 516 434 7470
Fax: 1 516 434 7491

Zeus Electronics
100 Midland Avenue
Port Chester
New York 10573
Tel: 1 914 937 7400
Fax: 1 914 937 2553

All American
333 Metro Park
Rochester
New York 14623
Tel: 1 716 292 6700
Fax: 1 716 292 6755

Future Electronics Corp.
300 Linden Oaks
Rochester
New York 14620
Tel: 1 716 387 9550
Fax: 1 716 387 9563

Hamilton/Hallmark–#61
1057 East Henrietta Road
Rochester
New York 14623
Tel: 1 716 475 9130
Fax: 1 716 475 9119

Marshall Industries
1250 Scottsville Road
Rochester
New York 14624
Tel: 1 716 235 7620
Fax: 1 716 235 0052

Marshall Industries
3505 Veterans Memorial HWY
Ste L
Ronkonkoma
New York 11779–7613
Tel: 1

Future Electronics Corp.
200 Salina Meadows Pkwy.,
Ste.130
Syracuse
New York 13212–4513
Tel: 1 315 451 2371
Fax: 1 315 451 7258

Hamilton/Hallmark–#08
100 Elwood Davis Road
Syracuse
New York 13212
Tel: 1 315 453 4000
Fax: 1 315 453 4010

Pioneer Std.
60 Crossways Park West
Woodbury
New York 11797
Tel: 1 516 921 8700
Fax: 1 516 921 2143

North Carolina

Future Electronics Corp.
8401 University Executive Park,
Ste.108
Charlotte
North Carolina 28262
Tel: 1 704 547 1107
Fax: 1 704 547 9650

Future Electronics Corp.
Smith Tower, Ste. 314
Charlotte Motor Speedway
Concord
P.O. Box 600
North Carolina 28026
Tel: 1 704 455 9030
Fax: 1 704 455 9173

Pioneer Tech.
2200 Gateway Center Blvd., Ste.215
Morrisville
North Carolina 27560
Tel: 1 919 460 1530
Fax: 1 919 460 1540

Anthem Electronics
4805 Green Road, Ste.100
Raleigh
North Carolina 27604
Tel: 1 919 871 6200
Fax: 1 919 790 8970

Future Electronics Corp.
5225 Capitol
Raleigh
North Carolina 27604
Tel: 1 919 790 7111
Fax: 1 919 790 9022

Hamilton/Hallmark
5234 Greens Dairy Road
Raleigh
North Carolina 27604
Tel: 1 919 872 0712
Fax: 1 919 878 8729

Marshall Industries
5224 Greens Dairy Road
Raleigh
North Carolina 27604
Tel: 1 919 878 9882
Fax: 1 919 872 2431

Ohio

Future Electronics Corp.
1430 Oak Court, Ste.203
Beavercreek
Ohio 45430
Tel: 1 513 426 0090
Fax: 1 513 426 8490

Pioneer Std.
4800 East 131st Street
Cleveland
Ohio 44105
Tel: 1 216 587 3600
Fax: 1 216 587 3906

Bell Industries
446 Windsor Park Drive
Dayton
Ohio 45459
Tel: 1 513 434 8231
Fax: 1 513 434 8103

Hamilton/Hallmark–#64
7760 Washington Village Drive
Dayton
Ohio 45459
Tel: 1 513 439 6721
Fax: 1 513 439 6705

Marshall Industries
3520 Park Center Drive
Dayton
Ohio 45414
Tel: 1 513 898 4480
Fax: 1 513 898 9835

Pioneer Std.
4433 Interpoint Blvd.
Dayton
Ohio 45424
Tel: 1 513 236 9900
Fax: 1 513 236 8133

Zeus Components
8200 Washington Village Drive
Dayton
Ohio 45458
Tel: 1 513 291 0276
Fax: 1 513 291 9060

Future Electronics Corp.
6009 East Lander Haven Drive
Maryfield Heights
Ohio 44124
Tel: 1 216 449 6996
Fax: 1 216 449 8987

Marshall Industries
30700 Bainbridge Road Unit A
Solon
Ohio 44139
Tel: 1 216 248 1788
Fax: 1 216 248 2312

Anthem Electronics
1286 Vantage Way
Streetsboro
Ohio 44241
Tel: 1 800 359 3520
Fax: 1 216 626 5001

Hamilton/Hallmark–#79
777 Dearboran Lane, Ste.L
Worthington
Ohio 43085
Tel: 1 614 888 3313
Fax: 1 614 888 0767

Oklahoma

Hamilton/Hallmark
5411 South 125th East Avenue, Ste.305
Tulsa
Oklahoma 74146
Tel: 1 918 252 7297
Fax: 1 918 254 6207

Pioneer Std.
9717 East 42nd Street, Ste.105
Tulsa
Oklahoma 74146
Tel: 1 918 665 7840
Fax: 1 918 665 1891

Oregon

All American
1815 NW 169th Pl., Ste.6025
Beaverton
Oregon 97006
Tel: 1 503 531 3333
Fax: 1 503 531 3695

Bell Industries
8705 SW Nimbus, Ste.100
Beaverton
Oregon 97008
Tel: 1 503 644 3444
Fax: 1 503 520 1948

Future Electronics Corp.
Cornell Oaks Corp. Center
15236 North West Greenbrier
Beaverton
Oregon 97006
Tel: 1 503 645 9454
Fax: 1 503 645 1559

Hamilton/Hallmark–#27
9750 South West Nimbus Ave.
Beaverton
Oregon 97005
Tel: 1 503 526 6200
Fax: 1 503 641 5939

Marshall Industries
9705 South West Gemini
Beaverton
Oregon 97005
Tel: 1 503 644 5050
Fax: 1 503 646 8256

Pioneer Tech.
8905 S.W. Gemini Drive
Beaverton
Oregon 97008
Tel: 1 503 626 7300
Fax: 1 503 626 5300

Anthem Electronics
15115 S.W. Sequoia, Ste.160
Portland
Oregon 97226
Tel: 1 503 598 9660
Fax: 1 503 598 7893

Pennsylvania

Anthem Electronics
355 Business Center Drive
Horsham
Pennsylvania 19044
Tel: 1 215 443 5150
Fax: 1 215 675 9875

Pioneer Tech.
Keith Valley Business Center
500 Enterprise Road
Horsham
Pennsylvania 19044
Tel: 1 215 674 4000
Fax: 1 215 674 3107

Pioneer Std.
259 Kappa Drive
Pittsburgh
Pennsylvania 15238
Tel: 1 412 782 2300
Fax: 1 412 963 8255

Texas

All American
6400 McNeil Road, Ste.203
Austin
Texas 78729
Tel: 1 512 335 2280
Fax: 1 512 335 2282

Anthem Electronics
14040 Summit Park Drive, Ste.119
Austin
Texas 78728
Tel: 1 512 388 0049
Fax: 1 512 388 0271

Future Electronics Corp.
6850 Austin Center Blvd.
Ste.320
Austin
Texas 78731
Tel: 1 512 502 0991
Fax: 1 512 502 0740

Hamilton/Hallmark–#26
12211 Technology Blvd.
Austin
Texas 78727
Tel: 1 512 258 8848
Fax: 1 512 258 3777

Marshall Industries
8504 Cross Park Drive
Austin
Texas 78727
Tel: 1 512 837 1991
Fax: 1 512 832 8910

Pioneer Std.
1826 D Kramer Lane
Austin
Texas 78758
Tel: 1 512 835 4000
Fax: 1 512 835 9829

Zeus Electronics
3220 Commander Drive
Carrollton
Texas 75006
Tel: 1 214 380 4330
Fax: 1 214 447 2222

Hamilton Hallmark
11333 Pagemill Rd
Dallas
Texas 75243
Tel: 1 214 553 6800
Fax: 1 214 553 4359

Pioneer Std.
13765 Beta Road
Dallas
Texas 75244
Tel: 1 214 386 7300
Fax: 1 214 490 6419

All American
11210 Steeplecrest, Ste.206
Houston
Texas 77065
Tel: 1 713 955 1993
Fax: 1 713 955 2215

Hamilton/Hallmark–#11
8000 West Glenn
Houston
Texas 77063
Tel: 1 713 781 6100
Fax: 1 713 953 8420

Marshall Industries
10681 Haddington, Ste.160
Houston
Texas 77043
Tel: 1 713 467 1666
Fax: 1 713 467 9805

Pioneer Std.
10530 Rockley Road, Ste.100
Houston
Texas 77099
Tel: 1 713 495 4700
Fax: 1 713 495 5642

Future Electronics Corp.
10333 Richmond Avenue,
Ste.970
Houston, TX 77042
Texas 77042
Tel: 1 800 785 1156
Fax: 1 713 785 4558

All American
1771 International Parkway,
Ste.101
Richardson
Texas 75081
Tel: 1 214 231 5300
Fax: 1 214 437 0353

All American Semiconductor
1771 International Parkway,
Ste.101
Richardson
Texas 75081
Tel: 1 214 231 7100
Fax: 1 214 437 0353

Anthem Electronics
651 N. Plano Road, Ste.401
Richardson
Texas 75081
Tel: 1 214 238 7100
Fax: 1 214 238 0237

Bell Industries
1701 Greenville Avenue,
Ste.306
Richardson
Texas 75081
Tel: 1 214 458 0047
Fax: 1 214 404 0267

Future Electronics Corp.
800 East Cambell
Richardson
Texas 75081
Tel: 1 214 437 2437
Fax: 1 214 669 2347

Marshall Industries
1551 North Glenville Drive
Richardson
Texas 75081
Tel: 1 214 705 0604
Fax: 1 214 705 0675

Future Electronics Corp.
6800 Park Ten Blvd., Ste.137–E
San Antonio
Texas 78213
Tel: 1 210 738 3330
Fax: 1 210 738 0511

Utah

Bell Industries
6912 South 185 West, Ste.B
Midvale
Utah 84047
Tel: 1 801 561 9691
Fax: 1 801 255 2477

All American
4455 South 700 East, Ste.301
Salt Lake City
Utah 84107
Tel: 1 801 261 4210
Fax: 1 801 261 3885

Anthem Electronics
1279 West 2200 South
Salt Lake City
Utah 84119
Tel: 1 801 973 8555
Fax: 1 801 973 8909

Future Electronics Corp.
3450 South Highland Drive,
Ste.301
Salt Lake City
Utah 84106
Tel: 1 801 467 4448
Fax: 1 801 467 3604

Hamilton/Hallmark–#09
1100 East 6600 South, Ste.120
Salt Lake City
Utah 84121
Tel: 1 801 266 2022
Fax: 1 801 263 0104

Marshall Electronics
2355 S. 1070 West, Ste.10 D
Salt Lake City
Utah 84119–1552
Tel: 1 801 973 2288
Fax: 1 801 973 2296

Washington

Bell Industries
1715 114th Avenue,South East
208
Bellevue
Washington 98004
Tel: 1 206 646 8750
Fax: 1 206 646 8559

Pioneer Tech
2800 156th Avenue, South East
Bellevue
Washington 98007
Tel: 1 206 644 7500
Fax: 1 206 644 7300

Anthem Electronics
19017–120th Ave.Ne.Ste.102
Bothell
Washington 98011
Tel: 1 206 483 1700
Fax: 1 206 486 0571

Future Electronics Corp.
19102 N. Creek Pkwy., Ste.118
Bothell
Washington 98011
Tel: 1 206 489 3400
Fax: 1 206 489 3411

Marshall Industries
11715 N. Creek Pkwy., South,
Ste.112
Bothell
Washington 98011
Tel: 1 206 486 5747
Fax: 1 206 486 6964

Hamilton/Hallmark–#07
8630 154th Avenue,North East
Redmond
Washington 98052
Tel: 1 206 881 6697
Fax: 1 206 867 0159

Wisconsin

Future Electronics Corp.
250 N. Patrick Blvd., Ste.170
Brookfield
Wisconsin 53045
Tel: 1 414 879 0244
Fax: 1 414 879 0250

Pioneer Std.
120 Bishops Way, Ste.163
Brookfield
Wisconsin 53005
Tel: 1 414 784 3480
Fax: 1 414 784 8207

Marsh Electronics, Inc.
1563 South 101st Street
Milwaukee
Wisconsin 53214
Tel: 1 414 475 6000
Fax: 1 414 771 2847

Hamilton/Hallmark–#57
2440 South 179th Street
New Berlin
Wisconsin 53146
Tel: 1 414 780 7200
Fax: 1 414 780 7201

Bell Industries
W.226 N–900 Eastmound Drive
Waukesha
Wisconsin 53186
Tel: 1 414 547 8879
Fax: 1 414 547 6547

Future Electronics Corp.
20875 Crossroads Cir., Ste.200
Waukesha
Wisconsin 53186
Tel: 1 414 786 1884
Fax: 1 414 879 0250

Marshall Industries
20900 Swenson Drive
Waukesha
Wisconsin 53186
Tel: 1 414 797 8400
Fax: 1 414 797 8270

Canada

Alberta

Future Electronics Corp.
2015 32nd Ave.,NE, Ste.1
T2E 6Z3 Calgary
Tel: 1 403 250 5550
Fax: 1 403 291 7054

Future Electronics Corp.
4606 97th Street
T6E 5N9 Edmonton
Tel: 1 403 438 2858
Fax: 1 403 434 0812

British Columbia

Hamilton/Hallmark–#45
8610 Commerce Ct.
V5A 4N6 Burnaby
Tel: 1 604 420 4101
Fax: 1 604 420 5376

Future Electronics Corp.
1695 Boundary Road
V5K 4X7 Vancouver
Tel: 1 604 294 1166
Fax: 1 604 294 1206

Manitoba

Future Electronics Corp.
106 King Edward Court
R3H 0N8 Winnipeg
Tel: 1 204 786 7711
Fax: 1 204 783 8133

Ontario

Future Electronics Corp.
5935 Airport Road, Ste.200
L4V 1W5 Mississauga
Tel: 1 905 612 9200
Fax: 1 905 612 9185

G. S. Marshall–Canada
6285 Northam Drive, Ste.112
L4V 1X5 Mississauga
Tel: 1 905 612 1771
Fax: 1 905 612 1988

Hamilton/Hallmark–#59
151 Superior Blvd.
L5T 2L1 Mississauga
Tel: 1 905 564 6060
Fax: 1 905 564 6033

Future Electronics Corp.
Baxter Centre
1050 Baxter Road
K2C 3P2 Ottawa
Tel: 1 613 820 8313
Fax: 1 613 820 3271

Quebec

Future Electronics Corp.
237 Hymus Blvd.
H9R 5C7 Pointe Claire
Tel: 1 514 694 7710
Fax: 1 514 695 3707

Marshall Industries
148 Brunswick Blvd.
H9R 5P7 Pointe Claire
Tel: 1 514 694 8142
Fax: 1 514 694 6989

Future Electronics Corp.
1000 Avenue St. Jean–Baptiste, Ste.100
G2E 5G5 Quebec
Tel: 1 418 682 8092
Fax: 1 418 682 8303

Hamilton/Hallmark–#65
7575 Transcanadiene Highway, Ste.600
H4T 1V6 St. Laurent
Tel: 1 514 335 1000
Fax: 1 514 355 2381

South America

Argentina

Compania de Semiconductores y Componentes S.A.
Parana 751/55
1017 Buenos Aires
Tel: 54 1 373 4091
Fax: 54 1 325 8689

Electrocomponentes S.A.
Solis 225/227/229
1078 Buenos Aires
Tel: 54 1 4761 864
Fax: 54 1 3258 076

Brasil

Politronic Produtos Eletroeletronicos Ltda.
Rua Manoel Ignacio Moreira 200
13210–770 Jundiai–SP
Tel: 55 11 7397 2428
Fax: 55 11 7397 1012

Atlas Componentes Eletronicos Ltda.
Vila Mariana
R.Tenente Gomes Ribeiro,182–10 Andar
04038–040 Sao Paulo–SP
Tel: 55 11 574 0404
Fax: 55 11 573 3144

Distributors

Asia Pacific

Australia

Braemac Pty Ltd
1/59–61 Burrows Road
Alexandria NSW 2015
Tel: 61 2 550 6600
Fax: 61 2 550 6377

Consulaust International Ptv Ltd
3rd Floor, 10 Bridge Street
Granville, NSW 2142
Tel: 61 2 637 2558
Fax: 61 2 682 4521

Consulaust International Pty. Ltd.
2064 Artarmon
P.O.Box 994
NSW
Tel: 61 2 415 965
Fax: 61 2 411 5294

IRH Components
1–5 Carter Street
2128 Silverwater
NSW
Tel: 61 2 364 1766
Fax: 61 2 648 3505

Hong Kong

Audio Mechanical Corp. Ltd.
Ste.1701 A World Finance Centre
South Tower, Harbour City
17, Canton Road, Tsimshatsui
Kowloon
Tel: 852 2 736 8192
Fax: 852 2 735 0926

Aggressive
Unit 6,BlkB,7/F Hoi Luen Ind C
55 Hoi Yuen Road
Kowloon
Kwuntong
Tel: 852 2342 2181
Fax: 852 2797 9388

Willas–Array Electronics Ltd.
200 Tai Lin Pai Road
Unit 1,24/F, Wyler Centre Phase 2
Kwai Chung
N.T.
Tel: 852 2 418 3700
Fax: 852 2 481 6992

India

Blue Star Limited
Blue Star House 11/A
Magarath Road
560 025 Bangalore
Tel: 91 80 558 4728
Fax: 91 80 558 4599

Spectra Innovations Inc.
S–822 Manipal Centre
47 Dickenson Road
560–042 Bangalore
Tel: 91 8055 8800 1
Fax: 91 8055 8687 2

Spectra Innovations Inc.
301, 5–Pusa Road
110005 New Delhi
Tel: 91 11 7535 719
Fax: 91 11 7525 341

Blue Star Limited
Sahas 414/2
Veer Savarkar Marg
400025 Prabhadevi, Bombay
Tel: 91 22 430 6155
Fax: 91 22 430 7078

Korea

Changnam Electronics Industry
#44–22, Yoido–Dong
9th Fl., Hosung Bldg.
Seoul
Youngdeungpo–Ku
Tel: 82 2 7820 412
Fax: 82 2 7847 702

Malaysia

Scan Components (M) Sdn.Bhd.
11900 Sungei Nibong
761–B, Jalan Sultan Azlan Shah
Penang
Tel: 60 4 643 5136
Fax: 60 4 643 6320

New Zealand

Arrow (NZ) Ltd.
19–21 Pretoria Street
Lower Hutt
P.O.Box 31186, WMC
Tel: 64 4 566 3222
Fax: 64 4 566 2111

Rep. of Singapore

Tomen (S) Pte Ltd
10 Shenton Way,#16–02 MAS Build.
Singapore 079117
Tel: 65 221 1422
Fax: 65 221 0400

Ryosho Techno (S) Pte Ltd
396 Alexandra Road, #04–03 BP Tower
Singapore 119955
Tel: 65 473 7118
Fax: 65 479 8286

Spectra Innovations Inc.
#01–07 Henderson Industr. Park
213 Henderson Road
Singapore 159553
Tel: 65 271 0016
Fax: 65 271 4112

Uppertech Singapore
Cititech Industrial Building
629 Aljunied Road #03–10
Singapore 389838
Tel: 65 747 4900
Fax: 65 747 1234

Willias–Array (S) Pte Ltd
40 Jalan Pemimpin
04–03B Tat Ann Building
Singapore 577185
Tel: 65 353 3655
Fax: 65 353 6153

Scan Technology (S) Pte Ltd.
Jurong Industrial Estate
10 Penjuru Lane
Singapore 609190
Tel: 65 2 652 655
Fax: 65 2 655 200

Taiwan, R.O.C.

Dynamar Taiwan Co. Ltd.
Section 4
#142, 11 F–7 Chung–Hsiao East Road
Taipei
Tel: 886 2 721 3007
Fax: 886 2 775 1597

Uppertech Enterprise Co.,Ltd.
Hsin Tien City
6F, No 92,Pao Chung Road
Taipei
Tel: 886 2 916 1997
Fax: 886 2 914 1152

World Peace Industrial Co., Ltd .
8 F., 76, Section 1
8F,76 Cheng Kung Road, Nan-kang
Taipei
Tel: 886 2 7885 200
Fax: 886 2 7883 255

Thailand

Scan Technology (T) Pte Ltd
93/37 Modern Group Building
Chaeng Wattana Road
Pakkred Nontaburi, 11120
Tel: 662 982 9023
Fax: 662 574 6386

Japan

Ryoden Trading Co., Ltd.
3–15–15 Higashi–Ikebukuru,
Toshima–ku
Tokyo 170
Tel: 81 3 5396 6233
Fax: 81 3 5396 6443

Ryoden Trading Co., Ltd.
4–1–4, Miyahara, Yodogawa–ku
Osaka 532
Tel: 81 6 399 3436
Fax: 81 6 399 3460

Tomen Electronics Corp.
Nisshin Bldg.
1–8–27, Konan, Minato–ku
Tokyo 108
Tel: 81 3 5462 9629
Fax: 81 3 5462 9684